SERVICE MANUAL

LE-1 CHASSIS

MODEL	COMMANDER	DEST.
KL-37W2	RM-838	AEP
KL-37W2K	RM-838	OIRT

MODEL	COMMANDER	DEST.
KL-50W2	RM-838	AEP
KL-50W2K	RM-838	OIRT
KL-50W2U	RM-838	UK

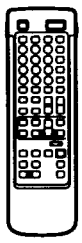

RM-838

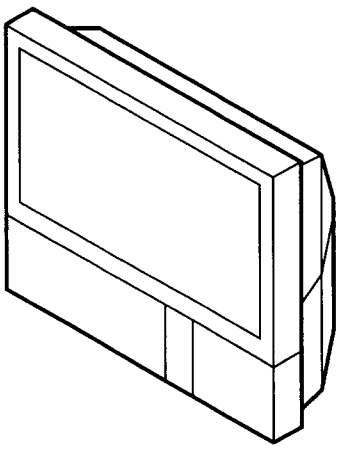

KL-37W2/37W2K

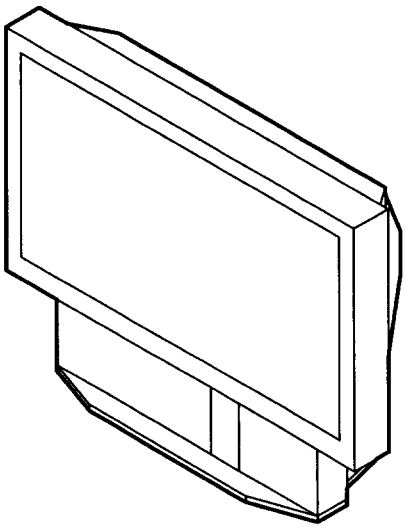

KL-50W2/50W2K/50W2U

MICROFILM

※ **Please file according to model size...**

37 | 50

LCD PROJECTION TV

SONY®

Specifications

This product complies with the EU Directive 89/336/EEC.

Television system	B/G/H, D/K, I, L
Colour system	PAL/SECAM NTSC 3.58/4.43 (VIDEO IN)
Channel coverage	See "Receivable channels and channel displays" at the bottom.
Projected picture size	37 inches (KL-37W2) Approx. 94 cm diagonally 50 inches (KL-50W2) Approx. 127 cm diagonally

Terminals

Rear

- 1 21-pin Euro connector (CENELEC standard) inputs for audio and video signals
  - inputs for RGB
  - outputs of TV video and audio signals
- 2/ 2 21-pin Euro connector
  - inputs for audio and video signals
  - inputs for S video
  - outputs for audio and video signals (selectable)
- 4/ 4 21-pin Euro connector
  - inputs for audio and video signals
  - inputs for S video
  - outputs for audio and video signals (monitor out)
- 2, 4 S video inputs
  - 4 pin DIN
- Audio inputs (L, R) - phono jacks
- S video output 4-pin DIN
- Audio outputs - phono jacks
- Audio outputs (variable)-phono jacks

Front

- 3 video input - phono jack
- Audio inputs - phono jacks
- 3 S video input - 4-pin DIN
- Headphone jack: stereo minijack

Sound output	2 × 5 W (music power) Centre 1 × 20 W
Power consumption	170 W
Dimensions (W × H × D)	920 × 825 × 390 mm (KL-37W2) 1,230 × 1,055 × 565 mm (KL-50W2)
Weight	29 kg (KL-37W2) 43 kg (KL-50W2)
Supplied accessories	See page 6.
Other features	Digital comb filter (High resolution) PAP (Picture-and-picture) FASTEXT Graphic Equalizer

Design and specifications are subject to change without notice.

Receivable Channels and Channel Displays

	Receivable channels	Indication on the screen
B/G/H	E2..12 21..69	C02 C03 C04..C12 C21..C69
CABLE TV (1)	S1..41	S01 S02..S41
CABLE TV (2)	S01..S05 M1..M10 U1..U10	S42..S46 S01..S10 S11..S20
ITALIA	A B C D E F G H H1 H2 21..69	C11..C69
D/K	R01..R12 R21..R69	C02..C12 C21..C69
CABLE TV (1)		S01 S02..S41
CABLE TV (2)		S42 S43..S46
CABLE TV	B..Q, S21..41	S02, S03..S17, S21..S41
L	F2..F10 F21..F69	C01..C12 C21..C69
I	B21..B68	C21..C68

TABLE OF CONTENTS

Section	Title	Page
1. GENERAL		4
2. DISASSEMBLY		
2-1.	Rear Cover Removal	18
2-2.	Chassis Assy Removal	18
2-3.	Service Position	18
2-4.	F2 Board and F2 Bracket Removal	18
2-5.	BB, B1 and J Boards Removal	19
2-6	Power Block Removal	19
2-7.	Filter Removal	19
2-8.	Lamp Removal	20
2-9.	H and F1 Boards Removal	20
2-10-1.	Screen Frame Removal [KL-37W2/37W2K]	20
2-10-2.	Screen Frame Removal [KL-50W2/50W2K/50W2U]	20
2-11.	C Board Removal	21
2-12.	Optical Unit Removal	21
3. CIRCUIT ADJUSTMENTS		
3-1.	Electrical Adjustments	22
3-2.	Test Mode	24
3-3.	Error Monitor and Detection	26
3-4.	Registration Adjustment	27
3-5.	C Board Adjustment	27
3-6.	A Board Adjustment	30
3-7.	Sub BRT, Sub PIX Adjsutment	30
3-8.	White Balance Adjustment	30
4. DIAGRAMS		
4-1.	Block Diagrams	33
4-2.	Frame Schematic Diagram	42
4-3.	Circuit Boards Location	44
4-4.	Schematic Diagrams and Printed Wiring Boards	44
(1)	Schematic Diagrams of F1, F2, G, H, J, TA and TB Boards	45
(2)	Schematic Diagram of A (1/3) Board	55
(3)	Schematic Diagram of A (2/3) Board	59
(4)	Schematic Diagram of A (3/3) Board	61
(5)	Schematic Diagram of B1 (1/3) Board	63
(6)	Schematic Diagram of B1 (2/3) Board	66
(7)	Schematic Diagram of B1 (3/3) Board	69
(8)	Schematic Diagram of C (1/2) Board	73
(9)	Schematic Diagram of C (2/2) Board	77
(10)	Schematic Diagram of BB (1/3) Board	80
(11)	Schematic Diagram of BB (2/3) Board	83
(12)	Schematic Diagram of BB (3/3) Board	86
4-5.	Semiconductiors	88
5. EXPLODED VIEWS		
5-1.	Chassis [KL-37W2/37W2K]	90
5-2.	Front Cover [KL-37W2/37W2K]	91
5-3.	Screen Mirror Block and Optics Unit [KL-37W2/37W2K]	92
5-4.	Chassis [KL-50W2/50W2K/50W2U]	93
5-5.	Front Cover [KL-50W2/50W2K/50W2U]	94
5-6.	Screen Mirror Block and Optics Unit [KL-50W2/50W2K/50W2U]	95
6. ELECTRICAL PARTS LIST		96

CAUTION

SHORT CIRCUIT THE ANODE OF THE PICTURE TUBE AND THE ANODE CAP TO THE METAL CHASSIS, CRT SHIELD, OR CARBON PAINTED ON THE CRT, AFTER REMOVING THE ANODE.

SAFETY-RELATED COMPONENT WARNING!!

COMPONENTS IDENTIFIED BY SHADING AND MARK ⚠ ON THE SCHEMATIC DIAGRAMS, EXPLODED VIEWS AND IN THE PARTS LIST ARE CRITICAL TO SAFE OPERATION. REPLACE THESE COMPONENTS WITH SONY PARTS WHOSE PART NUMBERS APPEAR AS SHOWN IN THIS MANUAL OR IN SUPPLEMENTS PUBLISHED BY SONY.

The operating instructions mentioned here are partial abstracts from the Operating Instruction Manual. The page numbers of the Operating Instruction Manual remein as in the manual.

SECTION 1
GENERAL

Overview

This section briefly describes the buttons and controls on the TV set and on the Remote Commander. For more information, refer to the pages given next to each description.

TV set-front

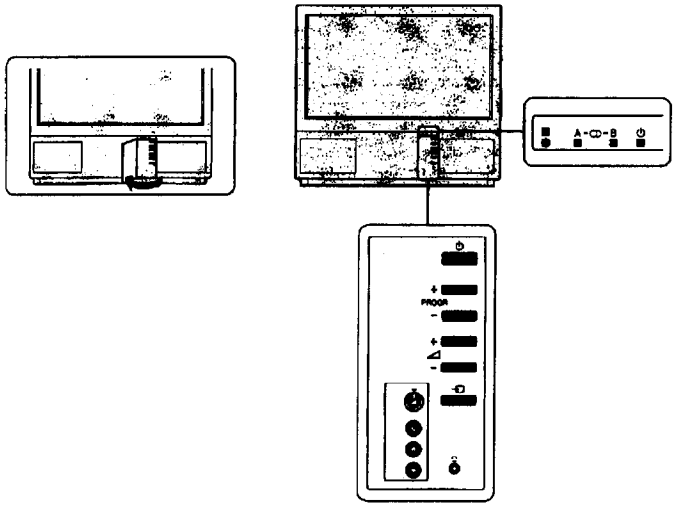

Symbol	Name	Refer to page
⏻	Main power switch	14
⏻	Standby indicator	14
A-CD-B	Stereo A/B indicators	16
PROGR+/–	Programme	14
⊿+/–	Volume buttons	14
⊸	Input select buttons	15
⊓	Headphones jack	23
⊸ 3, ⊸ 3, ⊸ 3	Input jacks (S video/video/audio)	24

Remote commander

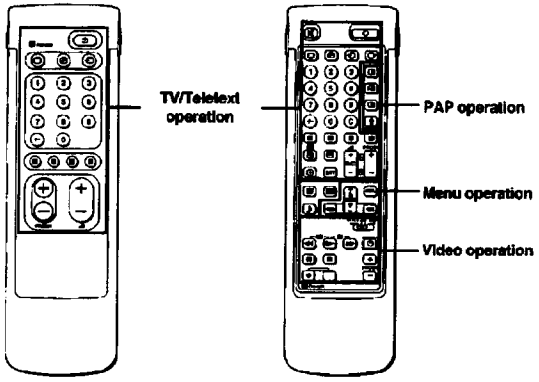

Simple side

Full-Function side

Note
The SAT button does not operate with this TV.

TV/Teletext operation

Symbol	Name	Refer to page
⊄	Mute on/off button	15
⏻	Standby button	14
▢	TV power on/TV mode selector button	14
⊕	Teletext button	15
⊸	Input mode selector	15
⊸	Output mode selector	24
1,2,3,4,5,6, 7,8,9 and 0	Number buttons	14
-/–	Double-digit entering button	14
C	Direct channel entering button	10
⊿+/–	Volume control button	14
PROGR +/–	Programme selectors	14
⊡⊡	Teletext page access buttons	20
●	Picture adjustment button	16
♪	Sound adjustment button	16
⊕	On-screen display button	15
⊕	Teletext hold button	20
⊕	Time display button	15
■■■■	Fastext buttons	20
⊖	"Freeze" button	15
⊞	Button to change Screen Format	15

PAP (Picture-and-picture) operation

Symbol	Name	Refer to page
◨	PAP on/off button	18
↑	PAP source selector	18
⊡	Swap button	18
◨	PAP freeze button	18

Menu operation

Symbol	Name	Refer to page
MENU	Menu on/off button	7
Δ+/ ∇–	Select buttons	7
OK	OK(confirming)button	7
⇐	Back button	7

Video operation

Symbol	Name	Refer to page
VTR1/2/3, MDP	Video equipment selector	26
◀◀ ▶ ▶▶ ■ ■ ● ⏻ PROGR +/–	Video equipment operation buttons	26

Getting Started

Step 1 Preparation

1 Check the supplied accessories

When you've taken everything out of the carton, check that you have these items:

- RM-836 Remote Commander
- One IEC designation R6 battery
- Dust remover
- Wrench (1)
- Bracket (2)

2 Insert the battery into the Remote Commander

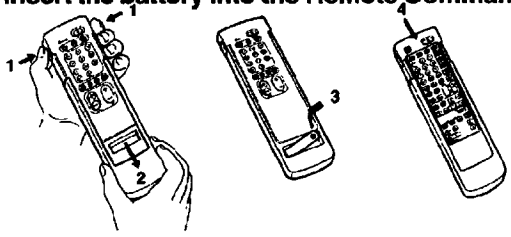

Remove the cover.

Check the correct polarities.

Refit the outside cover making sure that the Full-Function side is visible to use the menu in step 2.

Note: Always remember to dispose of used batteries in an enviromental friendly way.

3 Connect the aerial

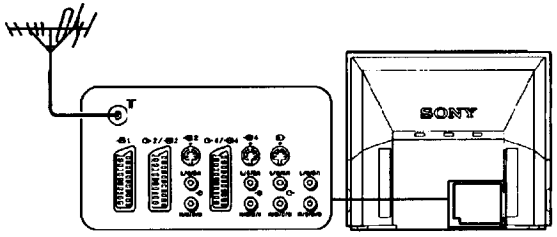

Fit an IEC aerial connector attached to 75-ohm coaxial cable (not supplied) to the 'I' socket at the rear of the TV.

Step 2 Tuning in to TV Stations

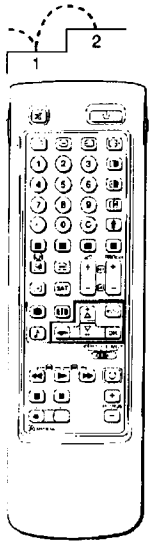

Once you have set up the TV, you can choose the language of the menu. Then, you should preset the channels (up to 100 channels) by choosing either the automatic or manual method. The automatic method is easier if you want to preset all receivable channels at once. Use the manual method if you only have a few channels and want to preset channels one by one.

Before you begin

- Check that the Full-Function side of the Remote Commander is visible.
- Locate Menu operation buttons on the Remote Commander. They are shaded in the illustration at the left.

1 Choose a language

1 Press ⏻ on the TV.
The TV will switch on. If the standby indicator on the TV is lit, press ▢ or a number button on the Remote Commander.

2 Press the MENU button.
The LANGUAGE menu appears. (See Fig. 1.)

MENU

3 Select the language you want with Δ + or ∇ – and press OK

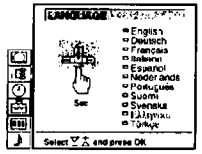

Fig. 1

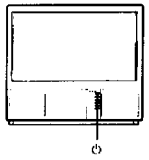

2 Display the menu

Press MENU

The main menu appears. (See Fig. 2.)

Using Δ + or ∇ – select the symbol 🧰 and press OK.

Now, choose one of the methods described overleaf:

"Preset Channels Automatically"

or

"Preset Channels Manually"

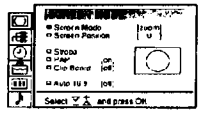

Fig. 2

To go back to main menu
Keep pressing ↩.

To go back to the normal TV picture
Press MENU. Normal TV picture will be restored after one minute if menu functions are not selected.

Note on the Demo function
If you choose Demo in the Installation menu, you can see a sequential demonstration of the menu functions. Press MENU to stop the function.

❸ Preset channels automatically

1 Select the symbol for "Preset" with Δ+ or ∇– and press OK.
The PRESET menu appears. (See Fig. 3.)

2 Select "Auto Programme" with Δ+ or ∇– and press OK.
The AUTO PROGRAMME menu appears. (See Fig. 4.)

3 Press OK.
Select if necessary the TV broadcast system (B/G for Western European or D/K for Eastern European countries) with Δ+ or ∇– and press OK. The first element of the "PROG" number will be highlighted.

4 Select the programme (number button) from which you want to start presetting. Select the first element of the double-digit number with Δ+ or ∇– or the number buttons (e.g., For "04," select "0" here) and press OK.

The second element of "PROG" will be highlighted.

5 Select the second element of the double-digit number with Δ+ or ∇– or the number buttons (e.g., For "04," select "4" here) (See Fig. 5) and press OK.

6 Select "C" or "S" with Δ+ or ∇– and press OK.
The automatic channel presetting starts.
When presetting is finished, the preset menu reappears. All available channels are now stored on successive number buttons. Press menu to restore normal TV picture.

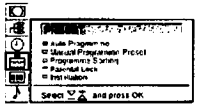

Fig. 3

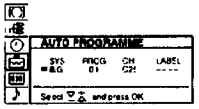

Fig. 4

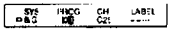

Fig. 5

To go back to the main menu
Keep pressing ⇐.

To stop automatic channel presetting
Press ⇐ on the Remote Commander.

Notes

- After presetting the channels automatically, you can check which channels are stored on which programme positions.
  For details, see "Displaying the Programme Table" on page 15.
- You can sort the programme positions to have them appear on screen in the order you like. For details, see "Sorting Programme Positions" on page 10.

Use this method if there are only a few channels in your area to preset or if you want to preset channels one by one.
You may also allocate programme numbers to various video input sources.

If you have made a mistake
Press ⇐ to go back to the previous position.

To return to the main menu
Keep pressing ⇐.

To go back to the normal TV picture
Press MENU.

To tune in a channel by frequency
After selecting F in step 6, enter three digits using the number buttons.

❸ Preset channels manually

1 Select the symbol for "Preset" with Δ+ or ∇– and press OK.
The PRESET menu appears. (See Fig. 6.)

2 Select "Manual Programme Preset" with Δ+ or ∇– and press OK.
The MANUAL PROGRAMME PRESET menu appears. (See Fig. 7.)

3 Using Δ+ or ∇–, select the programme position (number button) to which you want to preset a channel, and press OK.

4 Select, if necessary the TV broadcast system or a video input source (EXT)) with Δ+ or ∇–.

5 Then press OK. The CH position will be highlighted. (See Fig. 8.)

6 Using Δ+ or ∇–, select C (to preset a regular channel), S (cable channel) or F (to tune in by frequency) and press OK.
The first element of the "CH" number will be highlighted.
If you have selected EXT in step 5, select the video input source with Δ+ or ∇–. (See Fig. 9.)

There are two ways to preset channels, If you know the channel number, go to step "7-Manual."
or
If you don't know the channel number go to step "7-Search."

7 Manual

-a Select the first element of the "CH" number with Δ+ or ∇– or the number buttons and press OK.
The second element of the "CH" number will be highlighted.

-b Select the second element of the number with Δ+ or ∇– or the number buttons.
The selected number appears. (See Fig. 10.)

-c Press OK
The "SEARCH" position is highlighted and the selected channel is now stored. (See Fig. 11.)

-d Press OK until the cursor appears by the next programme position.

-e Repeat steps 3 to 7 to preset other channels.

7 Search

-a Press OK repeatedly until the colour of the SEARCH position changes.

-b Start searching for the channel with Δ+ (up) or ∇– (down).
The CH position changes colour. (See Fig. 12.)
The CH number starts counting up or downwards. When a channel is found, it stops. (See Fig. 13.)

-c Press OK if you want to store this channel. If not, press Δ+ or ∇– to continue channel searching.

-d Press OK until the cursor appears by the next programme position.

-e Repeat steps 3 to 7 to preset other channels.

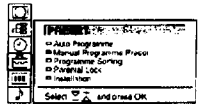

Fig. 6

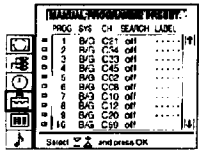

Fig. 7

Fig. 8

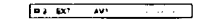

Fig. 9

Fig. 10

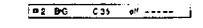

Fig. 11

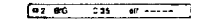

Fig. 12

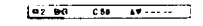

Fig. 13

Additional Presetting Functions

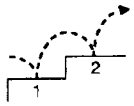

This section shows you additional presetting functions such as sorting or skipping programme positions captioning a station name, manual fine-tuning, and using the parental lock

Before you begin

- Check that the Full Function side of the Remote Commander is visible.
- Locate the Menu operation buttons.

Sorting Programme Positions

PROGRAMME SORTING

With this function, you can sort the programme positions to a preferable order.

1 Press MENU to display the main menu.

2 Select the symbol for "Preset" with Δ+ or ∇– and press OK. The PRESET menu appears.

3 Select "Programme Sorting" with Δ+ or ∇– and press OK. The PROGRAMME SORTING menu appears. (See Fig. 14.)

4 Using Δ+ or ∇–, select the programme position you want to move to another and press OK. The colour of the selected position changes. (See Fig. 15.)

5 Using Δ+ or ∇–, select the programme position to which you want to move the channel of the programme position selected in step 4 and press OK. Now the programme positions have been sorted. (See Fig. 16.)

6 Repeat steps 4 and 5 to sort other programme positions.

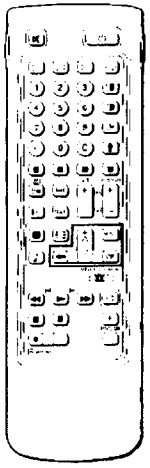

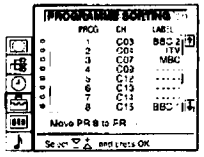

Fig. 14

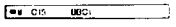

Fig. 15

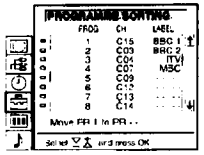

Fig. 16

For higher programme positions
The display scrolls automatically.

If you have made a mistake
Press ← to go back to the previous position

To go back to main menu
Keep pressing ←.

To go back to the normal TV picture
Press MENU.

Using "Further Programme Preset"

Using the menu "further Programme Preset" you can

a) in case of a strong local aerial signal (striped picture) attenuate the signal individually for each programme position (RF attenuator).

b) individually adjust and store the volume level of each channel (Volume offset).

c) in case of a strong sound signal (distorted sound), attenuate the sound signal for each programme position.

d) use the manual fine tuning to obtain a better picture reception, if the picture is distorted. Normally the AFT (automatic fine tuning) is operating.

1 Press MENU to display the main menu.

2 Select the symbol for "Preset" with Δ+ or ∇– and press OK. The PRESET menu appears.

3 Select "Installation" with Δ+ or ∇– and press OK. The INSTALLATION menu appears.

4 Select "Further Programme Preset" with Δ+ or ∇– and press OK. The FURTHER PROGRAMME PRESET menu appears (See Fig. 17).

5 Using Δ+ or ∇– select the desired programme position and press OK once to select a) "ATT" (RF Attenuator), twice to select b) "VOL" (Volume offset), three times to select c) "IN-AMP" (Input Amplifier) or four times to select d) AFT (Automatic Fine Tuning). The selected item changes colour.

To adjust or change:

a) RF attenuator (ATT)
Using Δ+ or ∇– select "On" for the selected programme position. Press OK to confirm the selection. Repeat step 5 to attenuate other programme positions

b) Volume offset (VOL)
Using Δ+ or ∇– you can adjust the volume level for the selected programme position within a range form –7 to +7.
Press OK to store the volume level.
Repeat step 5 to set the volume level for other programme positions.

c) IN-AMP (input amplifier)
Using Δ+ or ∇– select "Off" for the selected programme position Press OK to confirm the selection. Repeat step 5 to switch off the input amplifier for other programme positions.

d) AFT
Using Δ+ or ∇– you can fine-tune the channel within a range from –15 to +15. Press OK to store the fine-tuned level. Repeat step 5 to fine-tune the other channels.

6 Press MENU to return to the normal TV mode.

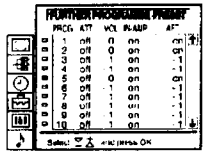

Fig. 17

To reactivate AFT (Automatic Fine Tuning)
Repeat from the beginnig and select "ON" in step 5.

MANUAL PROGRAMME PRESET

Skipping Programme Positions

You can skip unused programme positions when selecting programmes with PROGR +/– buttons. However the skipped programmes may still be called up when you use the number buttons.

1 Press MENU to display the main menu.

2 Select the symbol for "Preset" with Δ+ or ∇– and press OK. The PRESET menu appears.

3 Select "Manual Programme Preset" with Δ+ or ∇– and press OK. The MANUAL PROGRAMME PRESET menu appears. (See Fig. 18.)

4 Using Δ+ or ∇–, select the programme position which you want to skip and press OK. The "SYS" position changes colour.

5 Press Δ+ or ∇– until "– – –" appears in the SYSTEM position. (See Fig. 19.)

6 Press OK. (See Fig. 20.) When you select programmes using the PROGR +/– buttons, the programme position will be skipped.

7 Repeat steps 4 to 6 to skip other programme positions.

If you have made a mistake
Press ⇐ to go back to the previous position.

To go back to main menu
Keep pressing ⇐.

To go back to the normal TV picture
Press MENU.

PROGR

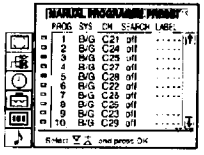

Fig. 18

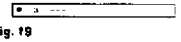

Fig. 19

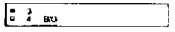

Fig. 20

MANUAL PROGRAMME PRESET

Captioning a Station Name

Programme names are usually automatically taken from Teletext if available. You can also "name" a channel or an input video source using up to five characters (letters or numbers) to be displayed on the TV screen (e.g. BBC1). Using this function, you can easily identify which channel or video source you are watching.

1 Press MENU to display the main menu.

2 Select the symbol for "Preset" with Δ+ or ∇– and press OK. The PRESET menu appears.

3 Select "Manual Programme Preset" with Δ+ or ∇– and press OK. The MANUAL PROGRAMME PRESET menu appears. (See Fig. 21.)

4 Using Δ+ or ∇–, select the programme position you want to caption and press OK repeatedly until the first element of the LABEL position is highlighted.

5 Select a letter or number with Δ+ or ∇– and press OK. The next element will be highlighted. Select other characters in the same way. If you want to leave an element blank, select - and press OK. (See Fig. 22.)

6 After selecting all the characters, press OK repeatedly until the cursor appears by the next programme position (at the left margin). Now the caption you chose is stored. (See Fig. 23.)

7 Repeat steps 5 and 6 to caption names for other channels.

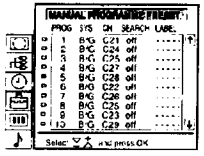

Fig. 21

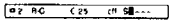

Fig. 22

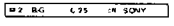

Fig. 23

PARENTAL LOCK

Parental Lock

You can prevent undesirable broadcasts from appearing on the screen. We suggest you use this function to prevent children from watching programmes which you consider unsuitable.

1 Press MENU to display the main menu.

2 Select the symbol for "Preset" with Δ+ or ∇– and press OK. The PRESET menu appears.

3 Select "Parental Lock" with Δ+ or ∇– and press OK. The PARENTAL LOCK menu appears. (See Fig. 24.)

4 Using Δ+ or ∇–, select the programme position you want to block and press OK. The symbol 🔒 appears in front of the programme number indicating that this programme is now blocked. (See Fig. 25.)

5 Repeat step 4 to block other programme positions.

If you try to select a programme that has been blocked
The message "LOCKED" appears on the blank TV screen.

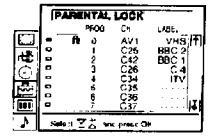

Fig. 24

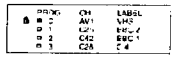

Fig. 25

Cancelling blocking

1 On the PARENTAL LOCK menu, select the programme position you want to unblock with Δ+ or ∇–.

2 Press OK. The symbol 🔒 disappears indicating that the blocking has been cancelled.

Tuning in a Channel Temporarily

You can tune in to a channel temporarily, even when it has not been preset. Use the buttons on the Full-Function side of the Remote Commander.

1 Press C on the Remote Commander. For cable channels, press C twice. The indication "C" ("S" for cable channels) appears on the screen. (See Fig. 26.)

2 Enter the double-digit channel number using the number buttons (e.g. for channel 4, first press 0, then 4). The channel appears. However, the channel will not be stored.

Fig. 26

Operating Instructions

Watching the TV

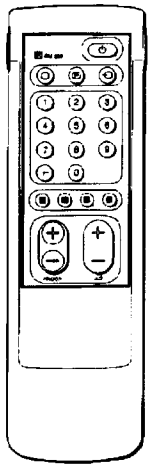

If no picture appears when you depress ⏻ on the TV and if the standby indicator on the TV is lit, the TV is in standby mode.
Press ⏻ or one of the number buttons to switch it on.

This section explains the basic functions you use while watching TV. Most of the operations can be done using the simple side of the Remote Commander.

Switching the TV on and off

Switching on

Depress ⏻ on the TV.

Switching off temporarily

Press ⏻ on the Remote Commander.
The TV enters standby mode and the standby indicator on the front of the TV lights up in red.

To switch on again

Press ⏻, PROGR +/–, or one of the number buttons on the Remote Commander.

When the power is turned on again right after the power is turned off, the projection TV will enter standby mode with the ⏻ (standby) indicator flashing. After the set cools down, the power will come on.

Switching off completely

Depress ⏻ on the TV and indicator on the front of the TV lights up in amber.

Selecting TV Programmes

Press PROGR +/– or press the number buttons.

To select a double-digit number

Press -/--, then the numbers.
For example, if you want to choose 23, press -/--, 2 and 3.

Adjusting the Volume

Press ◿ +/–.

Operating the TV Using the Buttons on the TV

To select the programme number, press the PROGR +/– buttons
To adjust the volume, press the ◿ +/– buttons.
To select the video input picture, press the ⇥ button.
To reset picture and sound controls to the factory preset level (RESET function), press PROGR +/– buttons simultaneously.

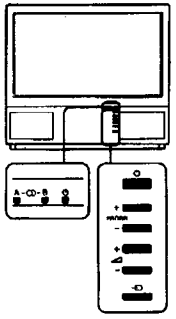

For details of the teletext operation, refer to page 20.

For details of the video input picture, refer to page 24.

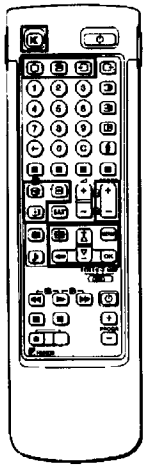

Watching Teletext or Video Input

Watching teletext

1 Press ▣ to view the teletext.
2 For teletext operation, enter a 3-digit page number with the number buttons to select a page.
For fastext operation, press one of the coloured buttons.
For both operations, press ▣ (PAGE +) for the next page or ▣ (PAGE –) for the preceding page.
3 To go back to the normal TV picture, press ▢.

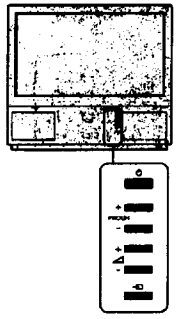

Watching a video input picture

1 Press ⇥ repeatedly until the desired video input appears.
2 To go back to the normal TV picture, press ▢.

More Convenient Functions

Use the Full-Function side of the Remote Commande .

Displaying the on screen indications

- Press ⓘ once to display all the indications. They will disappear after a few seconds.
- Press ⓘ twice to have the programme number and label stay on screen. Press twice again to make the indications disappear.

Muting the sound

Press ◁.
To resume normal sound, press ◁ again.

Displaying the time

Press ⏲. This function is available only when teletext is broadcast.
To make the time display disappear, press ⏲ again.

Displaying the Programme Table

Press OK. A Programme Table will be displayed on the left side of the TV screen. (See Fig. 27.)

Fig. 27

Selecting TV programmes

Press PROGR +/– or select the desired programme position using △+ or ▽– and press OK.

To make the Programme Table disappear, press MENU.

Freezing the Picture

When watching the TV you have the possibility to "freeze" the picture. Press ⏸. Press the button again to return to the normal TV picture.

Changing the Screen format

Press ▦ repeatedly to change the Screen mode as follows:
4:3 (4:3 picture)
➡ Smart (imitation of 16:9 for 4:3 broadcast)
➡ Zoom (imitation of 16:9 for movies broadcast in cinemascopic format)
or
➡ Wide (for 16:9 broadcast).
See also page 19 for more information.

Adjusting and Setting the TV Using the Menu

PICTURE CONTROL

SOUND CONTROL

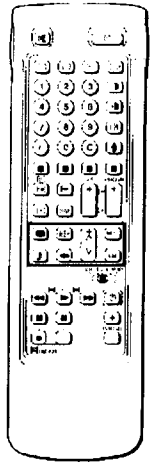

If you have made a mistake
Press ⇐ to go back to the previous position.
To go back to the main menu
Keep pressing ⇐.

Notes
• HUE is only available for NTSC colour systems.

When watching a video input source with stereo sound
You can select DUAL SOUND to change the sound.

Adjusting the Picture and Sound

Although the picture and sound are adjusted at the factory, you can adjust them to suit your own taste. You can also select dual sound (bilingual) programmes when available or adjust the sound for listening with the headphones. Also you have the possibility to adjust the sound to your individual taste using the Graphic Equalizer and special Sound effects.

1 Press ● (for picture) or ♪ (for sound) on the Remote Commander.

or

Press MENU and select the symbol ▣ for Picture Control or ♪ Sound Control, then press OK.
The PICTURE CONTROL or SOUND CONTROL menu appears. (See Fig. 28 or Fig. 29.)

2 Using Δ+ or ∇–, select the item you want to adjust and press OK.
The selected item changes colour. (See Fig. 30.)

3 Adjust the setting with Δ+ or ∇– and press OK.
The cursor appears beside the next item (at the left margin) (See Fig. 31.)
For the effect of each control, see the table below.

4 Repeat steps 2 and 3 to adjust other items.

5 Press MENU to return to TV picture

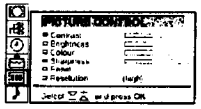

Fig. 28

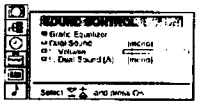

Fig. 29

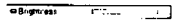

Fig. 30

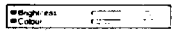

Fig. 31

Effect of each control

PICTURE CONTROL	Effect
Contrast	Less ——+—— More
Brightness	Darker ——+—— Brighter
Colour	Less ——+—— More
Hue	Greenish ——+—— Reddish
Sharpness	Softer ——+—— Sharper
RESET	Resets picture to the factory preset levels.
Resolution	Normal high: obtain a high quality picture

SOUND CONTROL	Effect
Graphic Equalizer	(See page 17 for more information)
Dual Sound	A: channel 1 B: channel 2 Stereo Mono
	The selected mode of the A-CD-B indicator on the TV lights up.
Headphones:	
∩ Volume	Less ——+—— More
∩ Dual Sound	A: channel 1 → B: channel 2 → PAP (if PAP is switched on you can select the PAP sound for the headphones)
	Stereo ⇄ Mono

Note: The modifications made in "USER" mode will be stored. All other settings are reset to factory-set level when you change to another mode.

TIMER

To switch off the timer
Select "OFF" in step 3.

To check the remaining time
Press ⊡.

To go back to the normal TV picture
Press MENU.

Graphic Equalizer

Using this function you can individually adjust the sound by cutting and boosting selected frequencies. You can also select between the following modes:

Flat → Pop → Rock → Jazz → Vocal → User

1 Select "Sound Control" in the main menu, then select "Graphic Equalizer" using Δ+ or ∇– and press OK.
The GRAPHIC EQUALIZER menu appears (See Fig. 32).

2 Press OK. The colour of "Mode" changes. Select the desired mode with Δ+ or ∇– and press OK.

3 If you want to modify a mode select the desired bar of a frequency band using Δ+ or ∇– and press OK. The selected frequency changes colour. Using Δ+ or ∇– adjust the level of frequency and press OK. In this way you can adjust all 5 graphic bars.

4 Press MENU to return to the normal TV mode.

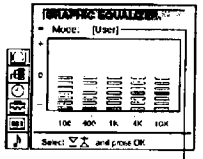

Fig. 32

Flat
Pop
Rock
Jazz
Vocal
User

Using the Sleep Timer

You can select a time period after which the TV automatically switches into standby mode.

1 Using Δ+ or ∇– select the symbol ⏲ for "Timer" and press OK.
The TIMER menu appears (see Fig. 33).

2 Press OK.
The time period option changes colour.

3 Select the time period with Δ+ or ∇–.
The time period (in minutes) changes as follows:

10 → 20 → 30 → 40 → 50 → 60 → 70 → 80 → 90

4 After selecting the time period, press OK.
The cursor moves back to the left margin and the timer starts counting.
One minute before the TV switches into standby mode, a message is displayed on the screen.

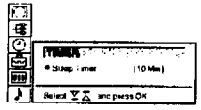

Fig. 33

PAP (Picture and Picture)

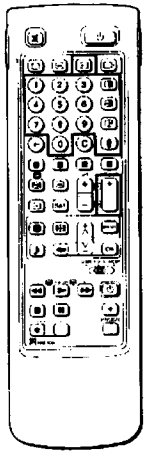

With this function you can display two screens at the same time. In this way you can watch two TV programmes at the same time. Also you can watch or monitor the video output from any connected equipment (for example from a VCR) while watching TV or vice versa. For information about connection of other equipment, refer to page 23.

Switching PAP on and off

Press ◨ to display the screens in 8:9 format.

The PAP screen will be displayed next to the main TV screen.

The PAP screen will come from the source chosen when the TV was last used.

To switch PAP off

Press ◨ repeatedly.

Selecting PAP source

Press ⇑.

The symbol ⇑ will be displayed at the bottom, left-hand corner of the screen.

Press PROGR +/–, the number buttons or ⇆ to select the desired source for the PAP screen.

Swapping screens

Press ⇄.

The main screen will switch the picture with the PAP screen.

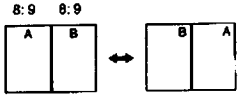

Freezing the picture

You have the possibility to "freeze" the picture of the PAP screen. Press ⧉ once to freeze and twice to return to the normal screen.

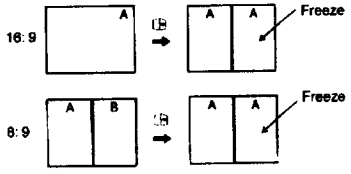

Notes

- RGB input source cannot be displayed in PAP.
- PAP is not available in the Zoom mode.
- The sound of the right screen is only available via the headphones.
- The picture quality of the TV screen and PAP may differ.

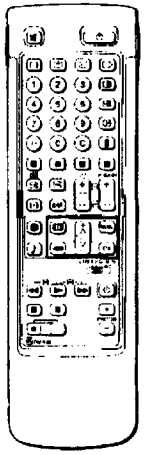

When you want to select the screen mode

You can also select the screen mode by pressing the ◧ button on the Remote Commander.

Operating Screen Mode/PAP using the Menu

Using the Screen Mode menu you have the possibility to change the aspect ratio for the TV display for wide screen effects, operate the PAP Mode or reproduce the main picture image by image (Strobe function).

1 Press MENU to display the main menu.

2 Select the symbol ◰ for "Screen Mode" with Δ+ or ∇– and press OK. The SCREEN MODE menu appears (See Fig. 34).

You have the choice among the following modes:

4:3 for normal ratio 4:3 (See Fig. 35).
Smart: imitation of wide screen effect (16:9) for 4:3 broadcasts (See Fig. 36).
Zoom imitation of wide screen effect (16:9) for movies broadcast in cinemascopic format (See Fig. 37).
or
Wide: for 16:9 broadcasts (See Fig. 38).

a) **Changing the Screen position (only for Zoom mode)**
When using the Zoom mode part of the picture at the top and bottom will be cut off. With the help of the function "Screen position" you can move the screen up- or downwards in order to see the cut-off part of the screen (e.g., to read the subtitles).

Using Δ+ or ∇– select "Screen position" and press OK. The selected item changes colour. Using Δ+ or ∇– adjust the screen position and press OK.

b) **Strobe Mode**
Using Δ+ or ∇– select "Strobe" and press OK. Now the TV picture is displayed image by image, creating a slow motion effect (See Fig. 39). Using Δ+ or ∇– select the speed of the motion (3 different speeds are available). Press OK to return to the normal TV mode.

c) **Switching PAP on and off**
Using Δ+ or ∇– select "PAP" and press OK. Using Δ+ or ∇– select "ON" to display the PAP screen in 8:9 format, and "OFF" to switch it off and press OK.

d) **Freezing the PAP screen**
Using Δ+ or ∇– select "Clip Board" and press OK.
Using Δ+ or ∇– select "On" to freeze the PAP screen and "Off" to restore the normal picture.

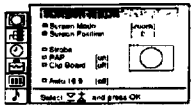
Fig. 34

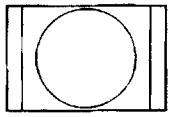
Fig. 35

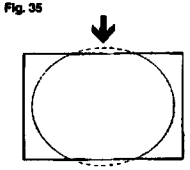
Fig. 36

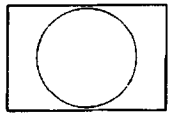
Fig. 37

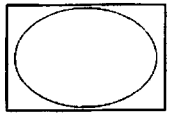
Fig. 38

Auto 16:9

If you preset Auto 16:9 to ON and the 16 : 9 format signal is being transmitted, the screen mode automatically changes from any mode to the 16 : 9 mode. When the 16 : 9 format programme is finished, the screen mode automatically returns to the previous mode.

1 Press MENU to display the main menu.

2 Select the symbol ◰ for "Screen Mode" with Δ+ or ∇– and press OK. The SCREEN MODE menu appears.

3 Select "Auto 16:9" with Δ+ or ∇– and press OK.

4 Select ON or OFF with Δ+ or ∇– and press OK.

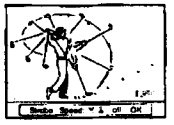
Fig. 39

Teletext

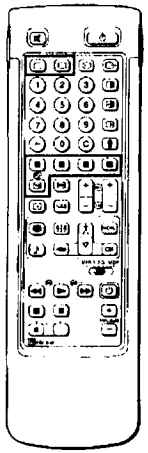

Note
Teletext errors may occur if the broadcasting signals are weak.

With the simple side of the Remote Commander
You can switch teletext on and off, operate Fastext, and directly select page numbers.

Note
Fastext operation is only possible, if the TV station broadcasts Fastext signals.

TV stations broadcast an information service called Teletext via the TV channels. Teletext service allows you to receive various information pages such as weather reports or news at any time you want. For advanced teletext operation, use the buttons on the Full-Function side of the Remote Commander.

Direct Access Functions

Switching Teletext on and off

1 Select the TV channel which carries the teletext broadcast you want to watch.

2 Press ▣ to switch on teletext.
A teletext page will be displayed (usually the index page).
If there is no teletext broadcast, "No text available" is displayed on the information line at the top of the screen.

To switch teletext off
Press ○.

Selecting a teletext page

With direct page selection
Use the number buttons to input the three digits of the chosen page number.
If you have made a mistake, type in any three digits. Then re-enter the correct page number.

With page-catching

1 Select a teletext page with a page overview (e.g. index page).

2 Press OK. Using △+ or ▽–, select the desired page. "Page Catching" will be displayed on the information line. Press OK.
The requested page will appear in a few seconds.
Press ▣ to resume normal teletext reception.

Accessing next or preceding page
Press ⊞ (PAGE+) or ⊟ (PAGE-).
The next or preceding page appears.

Superimposing the teletext display on the TV programme

- Press ▣ once in teletext mode or twice in TV mode.
- Press ▣ again to resume normal teletext reception.

Preventing a teletext page from being updated

- Press ⊞ (HOLD). The HOLD symbol "⊞" is displayed on the information line.
- Press ▣ to resume normal teletext reception.

Using Fastext

With Fastext you can access pages with one key stroke.
When a Fastext page is broadcast, a colour-coded menu will appear at the bottom of the screen. The colours of this menu correspond to the red, green, yellow and blue buttons on the Remote Commander.
Press the corresponding coloured button on the Remote Commander which corresponds to the colour-coded menu. The page will be displayed after a few seconds.

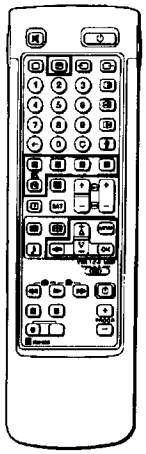

Note
Some of the features may not be available depending on the teletext service.

Press OK to select "OFF" for the TIME PAGE setting to cancel the request.

Using the Teletext Menu

This TV is provided with a menu-guided teletext system. When teletext is switched on, you can use the menu buttons to operate the teletext menu. Select the teletext menu functions in the following way:

1 Press MENU. The menu will be superimposed on the teletext display. (See Fig. 40.)

2 Using △+ or ▽–, select the teletext function you want and press OK. (See Fig. 41.)

Fig. 40

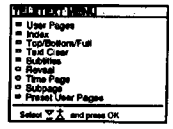

Fig. 41

USER PAGES/PRESET USER PAGES
See page 22 for information about presetting and operating the user pages.

INDEX
The index will give you an overview of the contents of the teletext and the page numbers.

TOP/BOTTOM/FULL
For convenient reading of a teletext page, you can enlarge the teletext display with the ability to scroll up and down. After having selected the function, an information line Top/Bottom/Full will be displayed. (See Fig. 42.)
Press △+ for "Top" to enlarge the upper half. For "Bottom" keep pressing ▽–, to enlarge the lower half. Press OK for "Full" to resume the normal size.
Press ▣ to resume normal teletext reception.

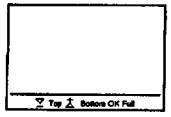

Fig. 42

TEXT CLEAR
After selecting the function, you can watch a TV programme while waiting for a teletext page to be captured. (The symbol changes colour.) (See Fig. 43.)
Press ▣ to resume normal teletext reception.

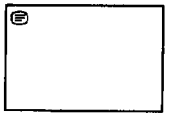

Fig. 43

SUBTITLES
Your teletext service will inform you if a TV programme is subtitled. After having selected the function the subtitles will be displayed.

REVEAL
Sometimes pages contain concealed information, such as answers to a quiz. The reveal option lets you disclose the information. After having selected the function, an information line "REVEAL ON/OFF" will be displayed. (See Fig.44.)
Using △+ or ▽–, select ON to reveal the information or OFF to conceal it again.
Press ▣ to resume normal teletext reception.

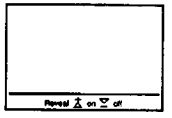

Fig. 44

TIME PAGE
Your teletext service will inform you, if a time coded page is available. You may have a page (e.g., an alarm page) displayed at a certain time.

1 An information window will be displayed at the bottom of the page. Using △+ or ▽– select "ON" and press OK.

2 To select the desired page, enter three digits for the page number (e.g., 452) using the number buttons.

3 To select the desired time, enter four digits for the desired time (e.g., 1800) using the number buttons. Press MENU.
The selected time is displayed at the top in the left-hand corner.
At the requested time, the page will be displayed.
Press ▣ to resume normal teletext mode.

To cancel the request
Select Subpage and press OK.

SUBPAGE

You may want to select a particular teletext page from several subpages which are rotated automatically. After having selected the function, an information line will be displayed.

To select the desired subpage, enter four digits using PROGR +/– or the number buttons (e.g., enter 0002 for the second page of a sequence).

User Page Bank System

If two broadcasting stations use the same Teletext
You can preset one bank to 2 different programme positions.

You can store up to 30 pages in the "Teletext page band system". In this way you have quick access to the pages you watch frequently.

Storing pages

There are 5 "banks" (A to E) for 5 teletext stations. In each bank you can store 6 preferred pages (P1 to P6).

1 Press ⓣ (if Teletext is not on already) and MENU to show the TELETEXT MENU display.

2 Select PRESET USER PAGES with Δ+ or ∇– and press OK.

3 Select the desired bank with Δ+ or ∇– and press OK. The cursor will go to the first position (P1) of the preferred pages.

4 Input the three digits of your first preferred page with the number buttons and press OK.
The cursor will go to the second position.

5 Repeat step 4 for the other 5 page numbers you want to preset. If you do not want to preset all 6 page numbers available, press OK without inserting any number. After having finished the presetting press OK repeatedly until the cursor appears besides the next bank at the left margin.

6 Select Allocate Bank with Δ+ or ∇– and press OK.

7 Select the programme position for which you have preset pages with Δ+ or ∇– and press OK. (See Fig. 45.)

8 Select the desired bank with Δ+ or ∇– (Banks A to E are available) and press OK.

9 Repeat steps 3 to 8 for the other 4 banks available.

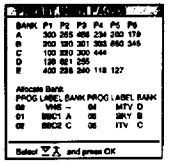

Fig. 45

Fig. 46

Displaying User Pages

1 Select MENU.

2 Select User Pages with Δ+ or ∇– and press OK.
A table of the stored preferred pages will be displayed. (See Fig. 46)

3 Select the desired page with Δ+ or ∇– and press OK. The page will be displayed after some seconds.

or

You can use the coloured buttons on the Remote Commander to have quick access to the first four User pages. Page 1 corresponds to the red button, P2 to the green one, P3 to the yellow one and P4 to the blue button.

To select the desired page press the respective coloured button while you are in TV mode. Now the Page number of this teletext page will appear in white at the top in the left-handed corner of the TV screen. When the page number changes colour, the page is available. Press the coloured button again to display the page.

Connecting and Operating Optional Equipment

Connecting Optional Equipment

You can connect optional audio-video equipment to this TV such as a VCR, video disc player, and stereo system.

To connect a VCR using the 'I' terminal
Connect the aerial output of the VCR to the aerial terminal 'I' of the TV. We recommend that you tune in the video signal to programme number "0." For details see "Preset channels manually" on page 9.

If the picture or the sound is distorted
Move the VCR away from the TV.

S/video input (Y/C input)
Video signals may be separated into Y (luminance or brightness) and C (chrominance) signals.
Separating the Y and C signals prevents them from interfering with one another, and therefore improves picture quality (especially luminance).
This TV is equipped with 3 S Video input jacks through which these separated signals can be input directly.

When connecting a monaural VCR
Connect only the white (mono) jack to both the TV and VCR.

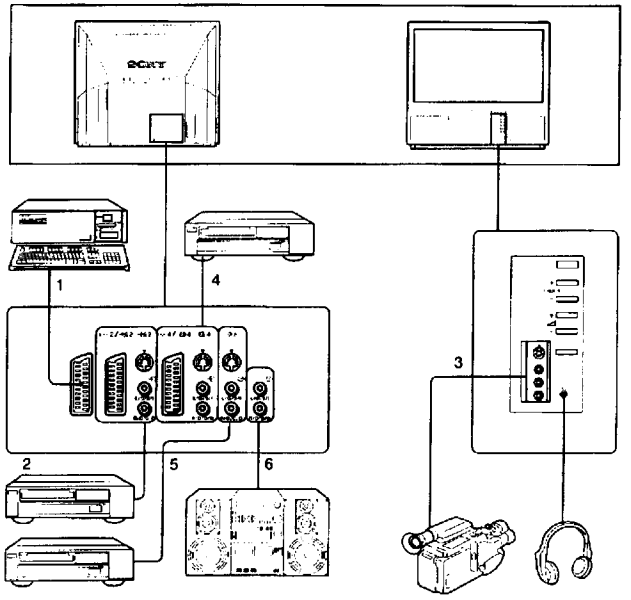

Acceptable input signal		Available output signal
1	Normal audio/video and RGB signal	Video/audio from TV tuner
2	Normal audio/video and S video signal	Video/audio from selected source
3	Normal audio/video and S video signal	No outputs
4	Normal audio/video and S video signal	Video/audio displayed on TV screen (monitor out)
5	No inputs	S/video/audio signal displayed on TV screen (monitor out)
6	No inputs	Audio signal

Selecting input with PROGR +/– or number buttons
You can preset video input sources to the programme positions so that you can select them with PROGR +/– or number buttons. For details, see "Preset channels manually" on page 9.

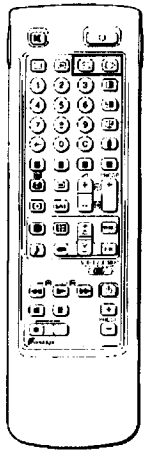

Selecting Input and Output

This section explains how to view the video input picture (of the video source connected to your TV), and how to select the output signal using direct access buttons or the menu system.

Selecting input
Press ⇦ repeatedly to select the input source.
The symbol of the selected input source will appear.

To go back to the normal TV picture
Press ▭.

Input modes

Symbol	Input signal
⇦ 1	Audio/video input through the ⇦ 1 connector
⇦	Audio/RGB input through the ⇦ 1 connector
⇦ 2	Audio/video input through the ⇨ 2/ ⇦ 2 connector
⇦ 2	Audio/S video input through the ⇨ 2/ ⇦ 2 or ⇦ 2 connector (4-pin connector)
⇦ 3	Audio/video input through ⇦ 3 and ⇦ 3 connector on the front
⇦ 3	S video input through the ⇦ 3 connector (4-pin connector) at the front
⇦ 4	Audio/video input through the ⇨ 4/ ⇦ 4 connector
⇦ 4	S video input through the ⇨ 4 / ⇦ 4 or ⇦ 4 connector(4-pin connector)

You can also select the input mode using the ⇦ button on the TV.

Selecting the output
The ⇨ 2 / ⇦ 2 connector outputs the source input from the other connectors.

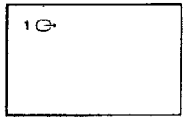

Press ⇨ repeatedly to select the output.

The symbol of the selected output source appears.

Output modes

Symbol	⇨ 2/ ⇦ 2 connector outputs
1 ⇨	Audio/video signal from the ⇦ 1 connector
2 ⇨	Audio/video signal from the ⇨ 2/ ⇦ connector
2 ⇨	Audio/S video signal from the ⇨ 2/ ⇦ 2 or ⇦ 2 connector (4 pin)
3 ⇨	Audio/video signal from the ⇦ 3, ⇦ 3 connectors
3 ⇨	Audio/S video signal from the ⇦ 3, ⇦ 3 connectors
4 ⇨	Audio/video signal from the ⇨ 4/ ⇦ 4 connector
4 ⇨	Audio/S video signal from the ⇨ 4/ ⇦ 4 or ⇦ 4 connector (4 pin)
TV ⇨	Audio/video signal from the 'I' aerial terminal

Using AV Preset

Using this function you can preset the desired input source (e.g. ⇦ 1, RGB signal) to the respective AV input (AV 1 ⇦). In this way a connected VTR will automatically switch to the RGB signal.

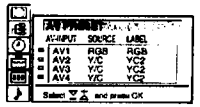

Fig.47

1 Select the symbol 🧰 for "Preset" with △+ or ▽– and press OK.
2 Select first "Installation", then "AV Preset" with △+ or ▽– and press OK.
The AV PRESET menu appears (See Fig. 47).
3 Select the desired AV input with △+ or ▽– and press OK.
4 Select the desired source with △+ or ▽– and press OK.
For the respective AV inputs you have the following possibilities:

AV1	RGB or AV	AV3	YC3 or AV
AV2	YC2 or AV	AV4	YC4 or AV

5 If you want to name the AV input select "Label" using △+ or ▽– and press OK. Select a letter or a number with △+ or ▽– and press OK. The next element will be highlighted. Select other characters in the same way. If you want to leave an element blank, select - and press OK.
After having selected all the characters, press OK repeatedly until the cursor appears by the next AV input at the left margin.
6 Repeat steps 3 to 6 for the other AV inputs.

Checking and selecting the input and output sources using the menu
You can display the menu to see which input sources are selected for the TV screen and PAP screen, and which output source is selected. You can also select them on the menu display.

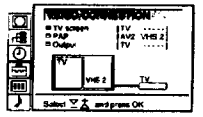

Fig. 48

1 Select the symbol 🎥 for "Video Connection" with △+ or ▽– and press OK. The VIDEO CONNECTION menu appears. (See Fig. 48)
You can see which source is selected for the TV and PAP input, and for the output. If you want to select the input and output on this menu, go on to the next step.
2 Select TV Screen (input source for the TV screen), PAP (input source for the PAP screen), or output (output source) with △+ or ▽– and press OK. One of the source items changes colour.
3 Select the desired source with △+ or ▽–.
For details about each source, see the table on page 24.
4 Press OK.
The selected source is confirmed, and the cursor appears.
5 Repeat steps 2 to 4 to select the source for other inputs or outputs.

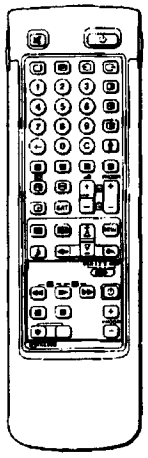

When recording when you use the ● (record) button, make sure to press this button and the one to the right of it simultaneously.

Remote Control of Other Sony Equipment

You can use the TV Remote Commander to control most of Sony remote-controlled video equipment such as: beta, 8 mm and VHS VCRs and video disc players.

Tuning the Remote Commander to the equipment

1 Set the VTR 1/2/3 MDP selector according to the equipment you want to control:

VTR1: Beta VCR
VTR2: 8 mm VCR
VTR3: VHS VCR
MDP: Video disc player

2 Use the buttons indicated in the illustration to operate the additional equipment.
If your video equipment is furnished with a COMMAND MODE selector, set this selector to the same position as the VTR 1/2/3 MDP selector on the TV Remote Commander.
If the equipment does not have a certain function, the corresponding button on the Remote Commander will not operate.

For Your Information

Optimum Viewing Area

For the best picture quality, try to position the projection TV so that you can view the screen from within the areas shown below.

Vertical viewing area

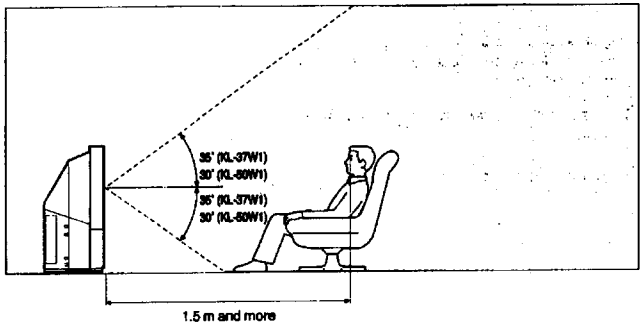

Horizontal viewing area

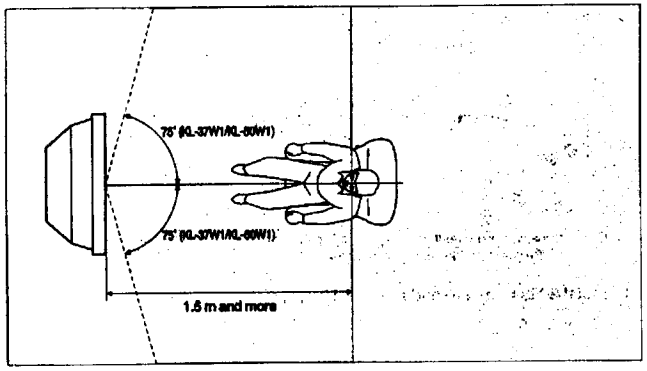

Cleaning of the Air Filter

Periodic cleaning of the air filter is necessary. Clean the air filter once a month. When the filter becomes old and dust remains on the filter even after cleaning, replace it with a new one.

- Clean the air filter periodically. If you don't clean, it may cause internal heat build-up.
- Never use an air filter which is torn or has holes. Attach the filter firmly with six tabs. If dust enters the TV, the picture may become dark.

1 Turn off the power and disconnect the power cord.

2 Remove the front panel.

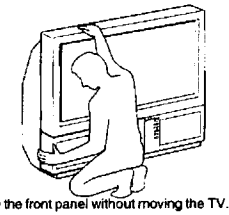

Remove the front panel without moving the TV.

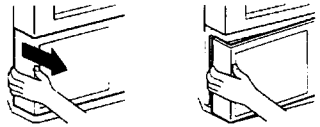

Grasping the side of the front panel with your fingers, pull it forward. Be careful not to catch your fingernails.

3 Pull the filter upward and remove it.

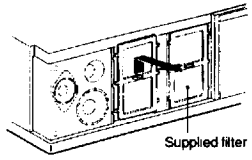

4 Clean the dust with a vacuum cleaner.

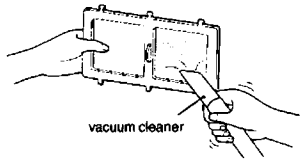

5 Attach the filter.
Attach the six tabs securely.

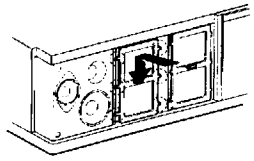

6 Attach the front panel.
Be careful not to damage the speaker.

Notes
- Attach the filter firmly. If it is not firmly attached, the power will not turn on.
- Remove the supplied filter in the same way as the attached filter.
- Consult your nearest Sony service center to obtain a new filter.

Replacing the Lamp

When the lamp becomes dark or the picture colour is not normal, replace with a new lamp.

- Use the new lamp for replacement. If you use another lamp, it may cause damage to the TV.
- Do not remove the lamp except when replacing it.
- Before replacing the lamp, turn off the power and disconnect the power cord.
- Replace the lamp after it becomes cool. The front glass of the lamp remains 100 °C (212 °F) and more even 30 minutes after the power is turned off.
- Do not place the removed lamp in proximity to children or flammable material.
- Do not get the removed lamp wet, or insert objects inside the lamp. It may cause the lamp to explode.
- Do not place near metal or easily flammable objects, as this may cause fire. Also, do not put your hand inside the lamp compartment, as you may be burned.
- Attach the new lamp firmly. If it is not firmly attached, the picture may become dark.

1 Turn off the power and disconnect the power cord.
Replace the lamp 30 minutes or more after the power is turned off.
Prepare the new lamp.

2 Remove the front panel.

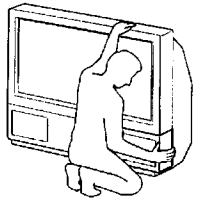

Remove the front panel without moving the TV.

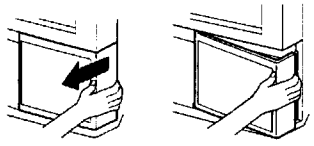

Grasping the side of the front panel with your fingers, pull it forward. Be careful not to catch your fingernails.

3 Loosen the screw with the object such as a coin and remove the lamp cover.

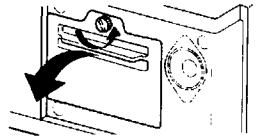

4 Loosen two screws and pull out the lamp.
The lamp is still too hot just after the power is turned off. Be careful that you don't touch the front glass or surrounding area of the lamp or the glass of the lamp compartment.

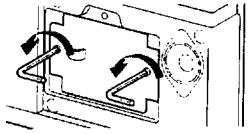

Loosen two screws with the supplied wrench.

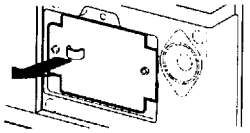

Pull out the lamp by the handle.

5 Attach the new lamp.
Fasten two screws tightly.

6 Attach the lamp cover.
Fasten the screws tightly.

7 Attach the front panel.
Be careful not to damage the speaker.

Notes
- Do not touch or stain the front glass of the new lamp or the glass of the lamp compartment. If the glass become dirty, the picture quality may deteriorate or the lamp life may shorten.
- Attach the lamp cover firmly. If it is not firmly attached, the power will not turn on.
- When the lamp burns out, a noise is audible. This does not represent a damage.
- Consult your nearest Sony service center to obtain a new lamp.

Troubleshooting

Here are some simple solutions to some problems which may affect the picture and sound.

Problem	Solution
No picture (screen is dark), no sound	• Plug in the TV in. • Press ⏻ on the TV (if ⏻ indicator is on, press ⏻ or a programme number on the Remote Commander). • Check the aerial connection. • Check if the selected video source is on.
Poor or no picture (screen is dark), but sound is OK	• Press ● to enter the PICTURE CONTROL menu and adjust the brightness, contrast and colour.
Poor picture quality when watching an RGB video source	• Press ⇦ repeatedly to select ⇦.
Good picture but no sound	• Press + . • If 🔇 is displayed on the screen, press 🔇.
No colour for colour programmes	• Press ● to enter the PICTURE CONTROL menu, select RESET, then press OK.
Remote Commander does not function	• The batteries are weak.

If you continue to have problems, have your TV serviced by qualified personnel. Never open the casing yourself.

Specifications

This product complies with the EU Directive 89/336/EEC.

Television system	B/G/H, D/K, I, L
Colour system	PAL/SECAM NTSC 3.58/4.43 (VIDEO IN)
Channel coverage	See "Receivable channels and channel displays" at the bottom.
Projected picture size	37 inches (KL-37W1) Approx. 94 cm diagonally 50 inches (KL-50W1) Approx. 127 cm diagonally
Terminals	
Rear	⇦ 1 21-pin Euro connector (CENELEC standard) inputs for audio and video signals - inputs for RGB - outputs of TV video and audio signals ⇨2/ ⇦ 2 21-pin Euro connector - inputs for audio and video signals - inputs for S video - outputs for audio and video signals (selectable) ⇨ 4/ ⇦ 4 21-pin Euro connector - inputs for audio and video signals - inputs for S video - outputs for audio and video signals (monitor out) ⇦ 2, ⇦ 4 S video inputs - 4 pin DIN ⇦ Audio inputs (L, R) - phono jacks ⇨ S video output 4-pin DIN ⇨ Audio outputs - phono jacks ⇨ Audio outputs (variable)-phono jacks
Front	⇦ 3 video input - phono jack ⇦ Audio inputs - phono jacks ⇦ 3 S video input - 4-pin DIN 🎧 Headphone jack: stereo minijack
Sound output	2 × 5 W (music power) Centre 1 × 20 W
Power consumption	170 W
Dimensions (W × H × D)	920 × 825 × 390 mm (KL-37W1) 1,230 × 1,055 × 565 mm (KL-50W1)
Weight	29 kg (KL-37W1) 43 kg (KL-50W1)
Supplied accessories	See page 6.
Other features	Digital comb filter (High resolution) PAP (Picture-and-picture) FASTEXT Graphic Equalizer

Design and specifications are subject to change without notice.

Receivable Channels and Channel Displays

	Receivable channels	Indication on the screen
B/G/H	E2..12 21..69	C02 C03 C04..C12 C21..C69
CABLE TV (1)	S1..41	S01 S02..S41
CABLE TV (2)	S01..S05 M1..M10 U1..U10	S42..S46 S01..S10 S11..S20
ITALIA	A B C D E F G H H1 H2 21..69	C11..C69
D/K	R01..R12 R21..R69	C02..C12 C21..C69
CABLE TV (1)		S01 S02..S41
CABLE TV (2)		S42 S43..S46
CABLE TV	B..Q, S21..41	S02, S03..S17, S21..S41
L	F2..F10 F21..F69	C01..C12 C21..C69
I	B21..B68	C21..C68

Warning Indicators

When a problem occurs, the indicator flashes as follows. Attempt the solution recommended for the given problem.

When a problem occurs while operating the set, the ⏻ (standby) indicator flashes first and then warning will be indicated.

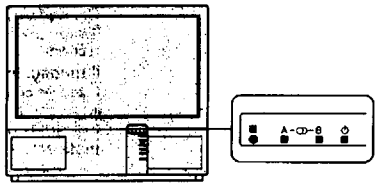

Cause	Indicator flashing patterns
The lamp burns out or the quality of the lamp is deficient.	The B indicator flashes twice then A flashes once. Flashing continues in this manner.
The cover of the filter or the lamp is removed.	The B indicator flashes three times then A flashes once. Flashing continues in this manner.
The fan for cooling stops.	The B indicator flashes four times then A flashes once. Flashing continues in this manner.
Internal heat builds up.	The B indicator flashes five times then A flashes once. Flashing continues in this manner.

If the lamp flashes in a way not described above, consult your nearest Sony service center.

Stabilizing the Projection TV

After setting up, secure the projection TV to a wall, etc., with the supplied brackets, for safety purposes.

1 Mount the two supplied brackets with the screws to the upper rear side of the projection TV.

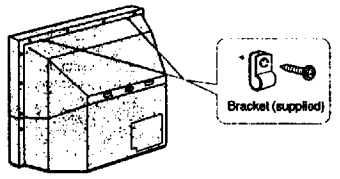

2 Pass a strong cord or a chain through each bracket mounted in 1, and then secure to a wall or a pillar, etc.

SECTION 2
DISASSEMBLY

2-1. REAR COVER REMOVAL

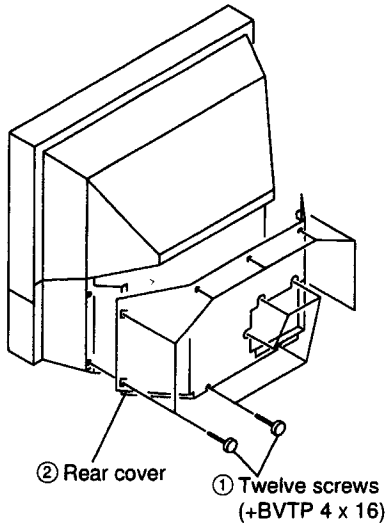

2-2. CHASSIS ASSY REMOVAL

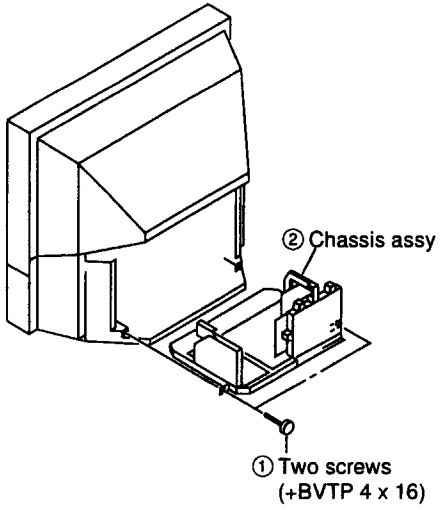

2-3. SERVICE POSITION

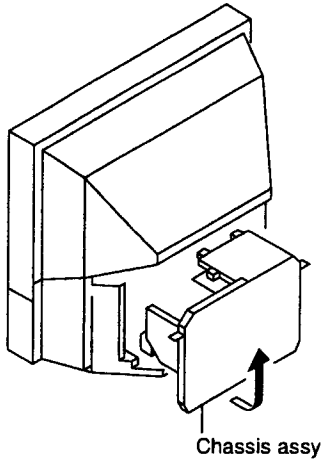

2-4. F2 BOARD AND F2 BRACKET REMOVAL

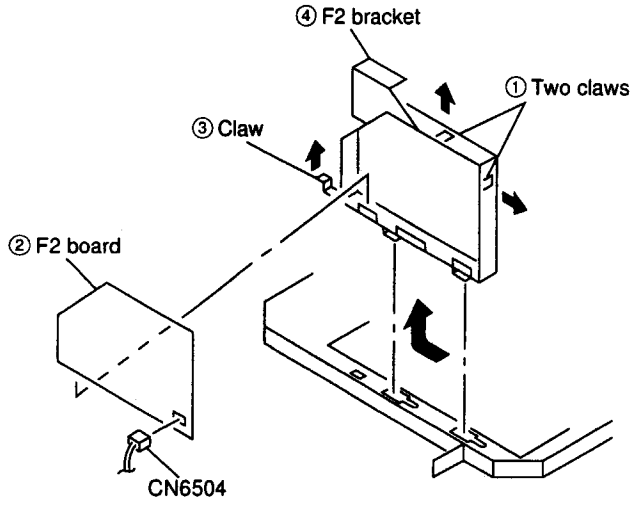

2-5. BB, B1 AND J BOARDS REMOVAL (EXTENSION BOARD)

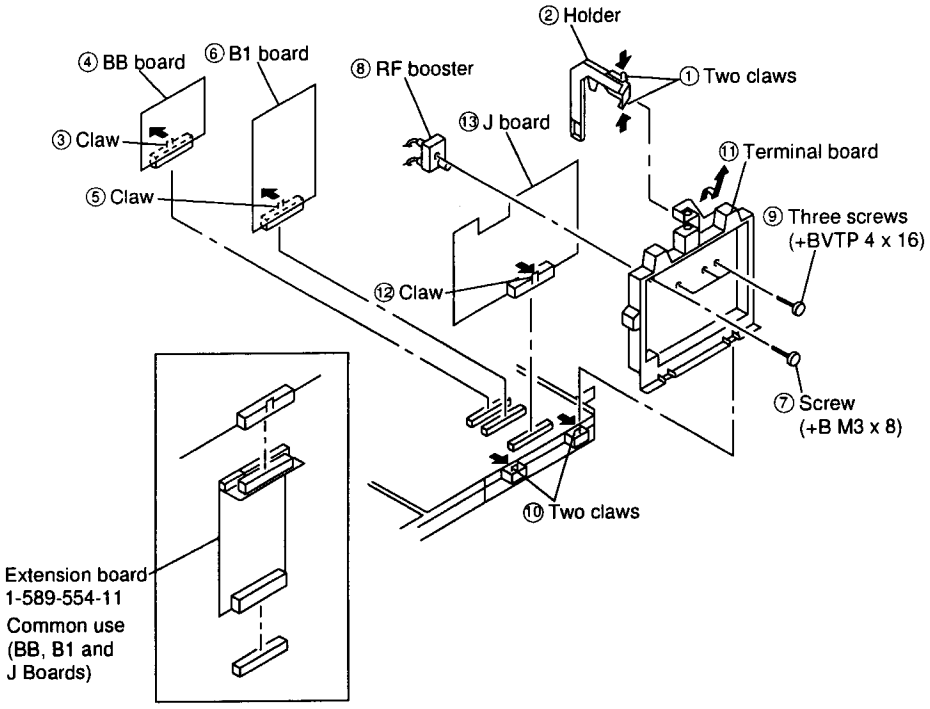

2-6. POWER BLOCK REMOVAL

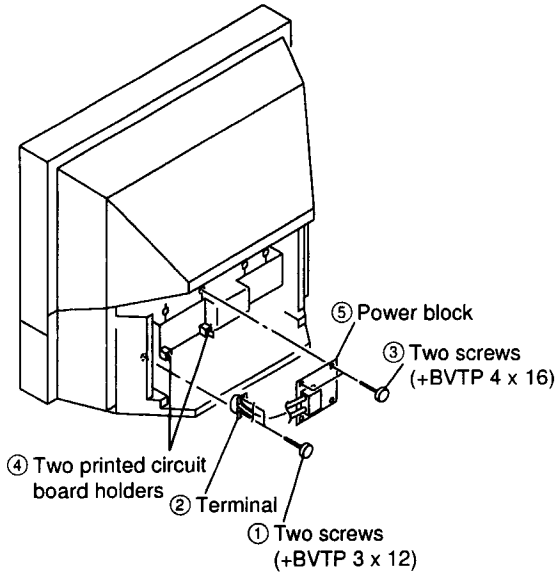

2-7. FILTER REMOVAL

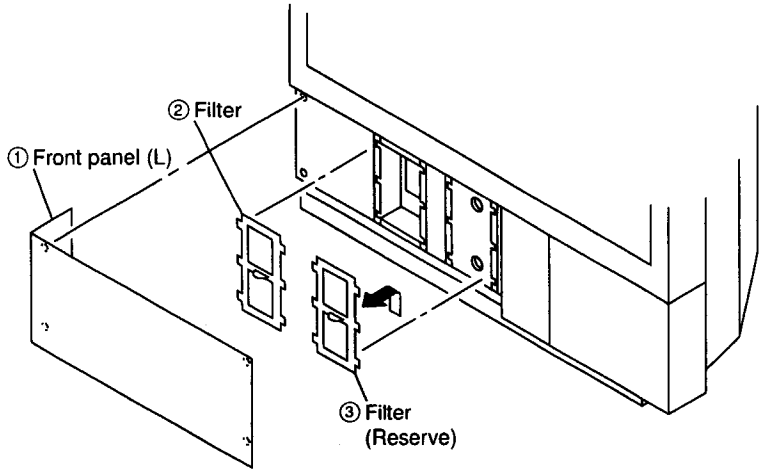

2-8. LAMP REMOVAL

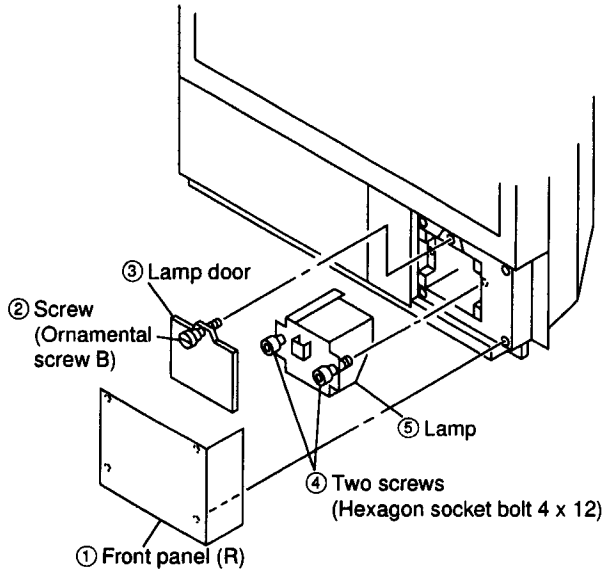

2-9. H AND F1 BOARDS REMOVAL

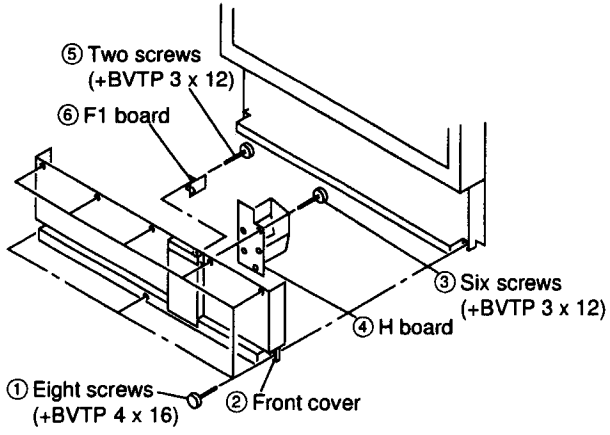

2-10-1. SCREEN FRAME REMOVAL [KL-37W2/37W2K]

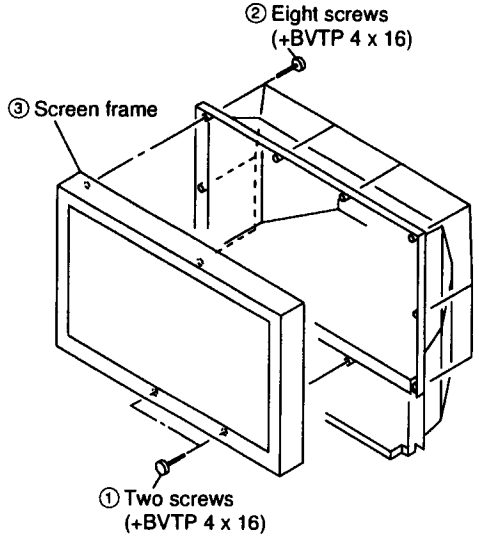

2-10-2. SCREEN FRAME REMOVAL [KL-50W2/50W2K/50W2U]

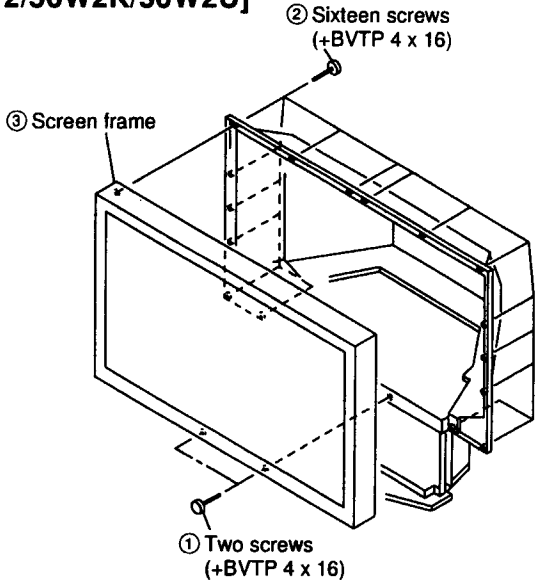

2-11. C BOARD REMOVAL

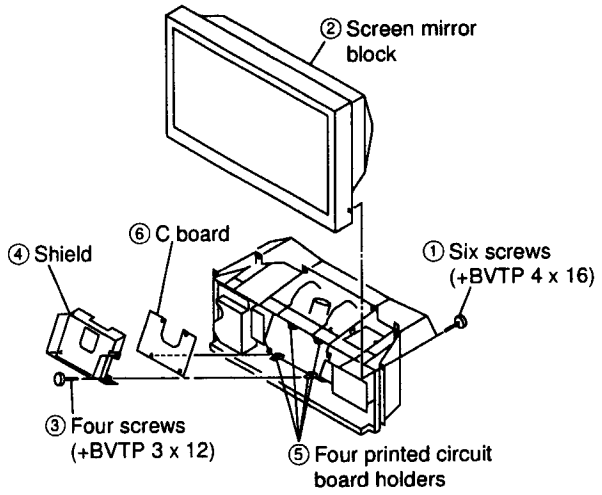

2-12. OPTICAL UNIT REMOVAL

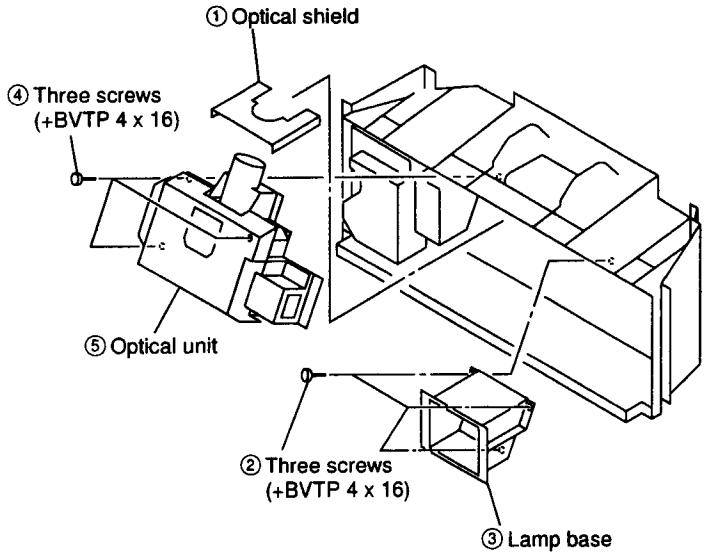

SECTION 3
CIRCUIT ADJUSTMENTS

3-1. ELECTRICAL ADJUSTMENTS

Service adjustment to this model can be performed with the supplied remote commander, RM-838.

HOT TO ENTER INTO SERVICE MODE

1. Turn on the main power switch of the set while pressing the + (plus) and – (minus) buttons on the customer front panel.

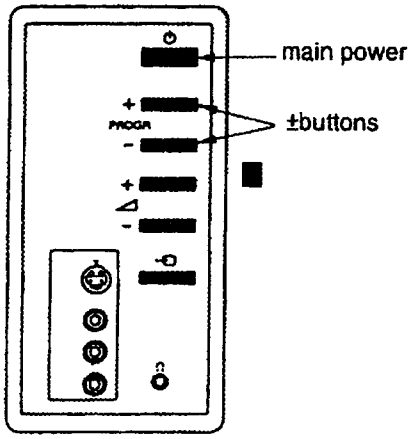

Fig. 4-1

2. "TT" will appear on the upper right ... [illegible]

4. Press the ▲ and ▼ buttons on the remote commander to select the adjustment item.
5. Press the OK button to procced to the next menu.
6. If the adjustment item is Video cont press the ▼ button to move to Video cont then press OK button.
7. The Menu as indicated in Fig will appear on the screen.

Video Cont. CXA1839

Item No.	Adjustment Item	Data Amount
1	Sub BRT	[6]
2	Sub COL1	[15]
3	Sub CON1	[15]
4	PIC	[53]
5	HUE	[31]
6	COL	[31]
7	BRT	[31]
8	SHP	[31]
9	Sub HUE	[6]
10	D COL	[off]
11	SHP Lim	[off]
12	Age WHT	[off]
13	R-Y R	[8]
14	R-Y B	[13]

available. Press the coloured button again to display the page.

KL-37W2/37W2K RM-838
KL-50W2/50W2K/50W2U RM-838
KL-37W2/37W2K RM-838
KL-50W2/50W2K/50W2U RM-838
KL-37W2/37W2K RM-838
KL-50W2/50W2K/50W2U RM-838

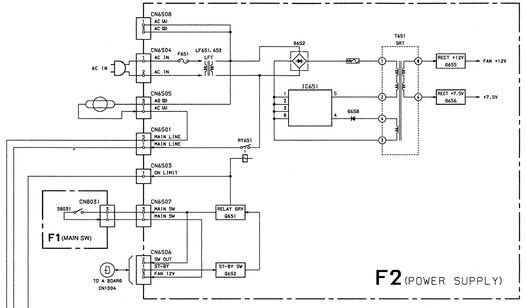

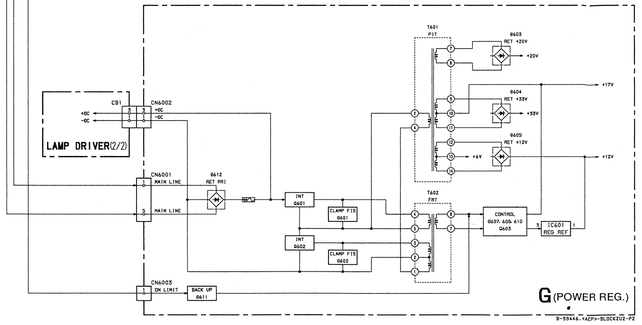

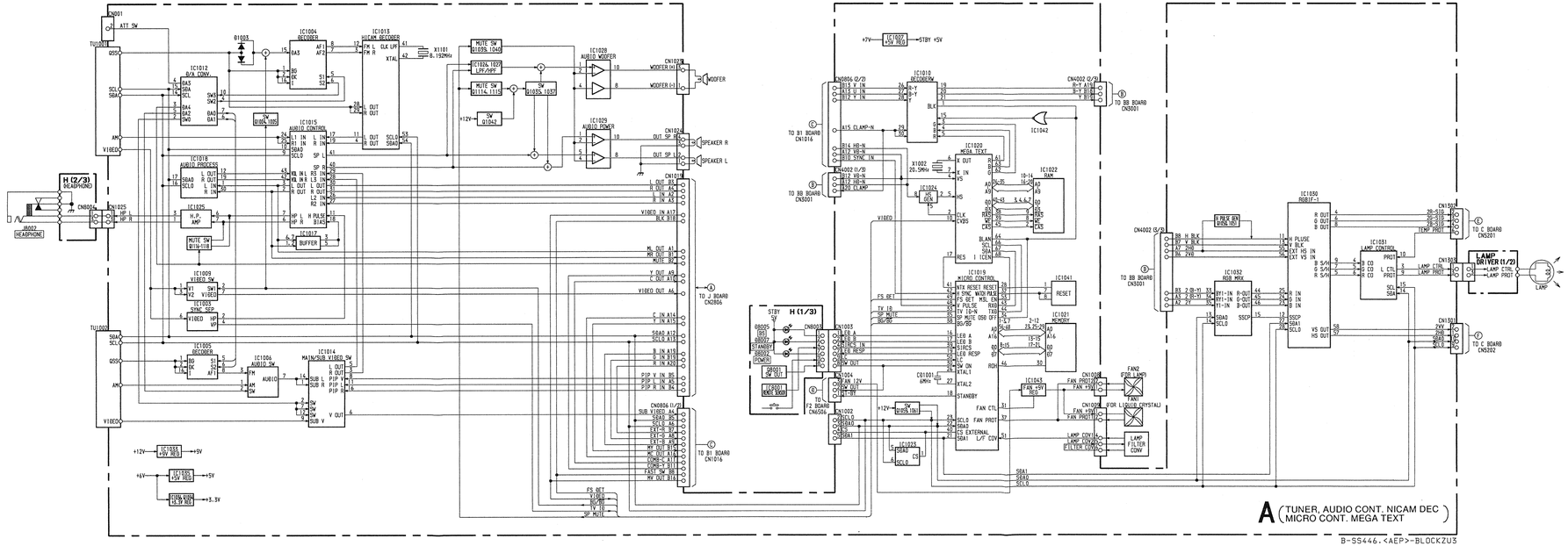

4-2. FRAME SCHEMATIC DIAGRAM

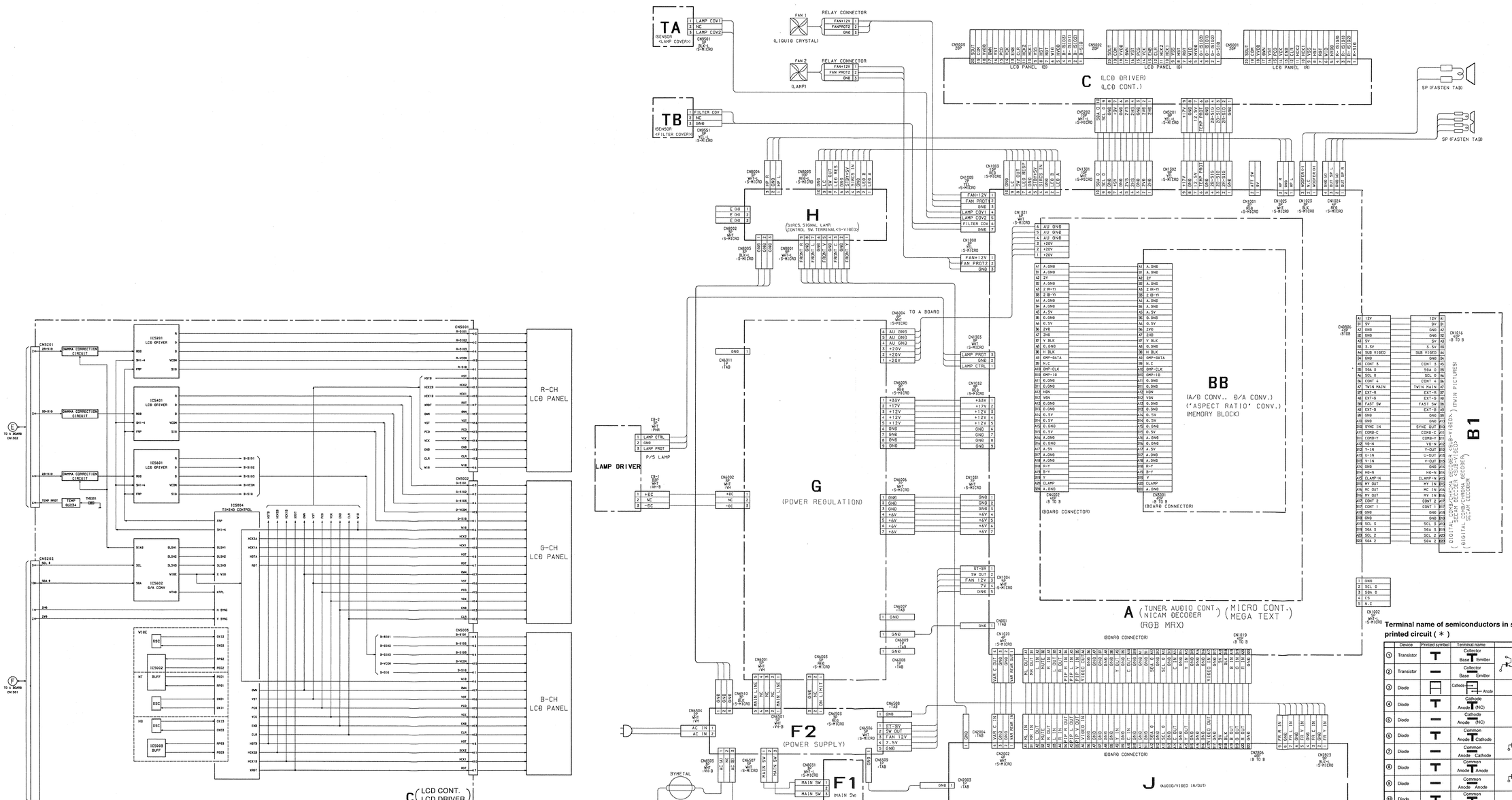

4-3. CIRCUIT BOARDS LOCATION

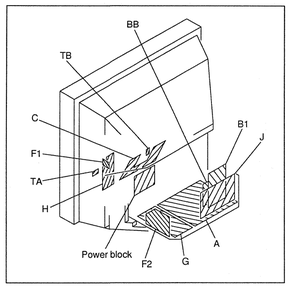

4-4. SCHEMATIC DIAGRAMS AND PRINTED WIRING BOARDS

Note:

- All capacitors are in μF unless otherwise noted. (pF: μμF) Capacitors without voltage indication are all 50 V.
- Indication of resistance, which does not have one for rating electrical power, is as follows.

Pitch: 5 mm Rating electrical power 1/4 W (CHIP : 1/10 W)

- All resistors are in ohms.
- : nonflammable resistor.
- : fusible resistor.
- △ : internal component.
- ▭ : panel designation, and adjustment for repair.
- All variable and adjustable resistors have characteristic curve B, unless otherwise noted.
- ⊥ : earth-ground.
- ⏚ : earth-chassis.
- All voltages are in V.
- Readings are taken with a 10 M digital multimeter.
- Readings are taken with a color-bar signal input.
- Voltage variations may be noted due to normal production tolerances.
  - * : Can not be measured.
  - NO MARK: PAL
  - ( ) : SECAM
- Circled numbers are waveform references.
- ▬▬ : B + bus.
- ▬ ▬ ▬ : B − bus.
- ⇨ : Signal path.

Reference information

RESISTOR	: RN	METAL FILM
	: RC	SOLID
	: FPRD	NONFLAMMABLE CARBON
	: FUSE	NONFLAMMABLE FUSIBLE
	: RW	NONFLAMMABLE WIREWOUND
	: RS	NONFLAMMABLE METAL OXIDE
	: RB	NONFLAMMABLE CEMENT
COIL	: LF-8L	MICRO INDUCTOR
CAPACITOR	: TA	TANTALUM
	: PS	STYROL
	: PP	POLYPROPYLENE
	: PT	MYLAR
	: MPS	METALIZED POLYESTER
	: MPP	METALIZED POLYPROPYLENE
	: ALB	BIPOLAR
	: ALT	HIGH TEMPERATURE
	: ALR	HIGH RIPPLE

Note: The components identified by shading and mark ⚠ are critical for safety. Replace only with part number specified.

Terminal name of semiconductors in silk screen printed circuit (*)

	Device	Printed symbol	Terminal name	Circuit
①	Transistor	T	Collector Base Emitter	
②	Transistor	—	Collector Base Emitter	
③	Diode		Cathode Anode	
④	Diode	T	Cathode Anode (NC)	
⑤	Diode	—	Cathode Anode (NC)	
⑥	Diode	T	Common Anode Cathode	
⑦	Diode	—	Common Anode Cathode	
⑧	Diode	T	Common Anode Anode	
⑨	Diode	—	Common Anode Anode	
⑩	Diode	T	Common Cathode Cathode	
⑪	Diode	—	Common Cathode Cathode	
⑫	Transistor (FET)	I	Drain Source Gate	
⑬	Transistor (FET)	⊢	Drain Source Gate	
⑭	Transistor (FET)	I	Source Drain Gate	
⑮	Transistor	I	Emitter Collector Base	
⑯	Transistor		C1B1E1 ATMP C1	
⑰	Transistor		C1B1E2 ATMP C2	
⑱	Transistor	—	C1 B2 E2 ATMP C2	
⑲	Transistor	—	C1 B1 E2 ATMP C2	
⑳	Transistor	—	C2 B1 E1 ATMP C2	
㉑	Transistor	—	C2 B1 E1 ATMP C2	
㉒	Transistor	—	C2 B1 E1 ATMP C2	
—	Discrete semiconductot			

(Chip semiconductors that are not actually used are included.)

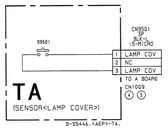

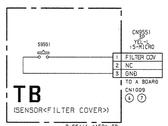

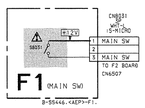

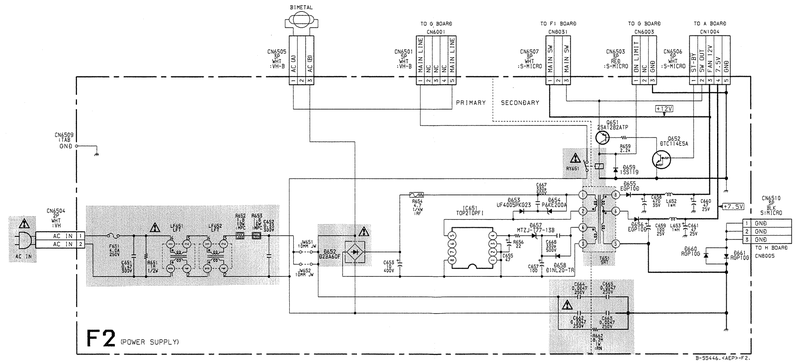

• F2 BOARD VOLTAGE LIST

Ref.	Pin No.	Voltage [V]
IC651	4	5.7
	5	237.2
Q651	B	8.1
	C	8.9
	E	8.9
Q652	B	4.2
	C	0

• J BOARD WAVEFORMS

①	②	③
1.0 Vp-p (H)	1.5 Vp-p (H)	1.0 Vp-p (H)

• J BOARD VOLTAGE LIST

Ref.	Pin No.	Voltage [V]	Ref.	Pin No.	Voltage [V]
C2401	1	4.6		38	4.6
	2	4.6		39	4.6
	3	4.6		40	4.6
	4	4.6		42	4.6
	5	4.6		43	4.6
	6	0		45	4.5
	7	4.6		46	4.6
	8	4.6		47	4.6
	9	4.6		48	4.6
	10	4.6			
	11	4.6	IC2402	2	2.1
	12	0		3	2.8
	13	4.6		6	1.9
	14	4.6		8	2.3
	15	4.6			
	16	4.6	Q2001	B	0.1
	17	4.6		C	0
	18	0	Q2002	B	0.1
	19	*		C	0
	20	*			
	22	4.6	Q2401	B	4.5
	23	4.6		E	3.9
	24	4.6			
	26	4.6	Q2402	B	4.5
	28	4.6		E	3.9
	29	0			
	31	4.6	Q2403	B	4.5
	32	4.6		E	3.8
	33	4.6			
	35	4.6	Q2404	B	4.5
	37	4.6		E	3.8

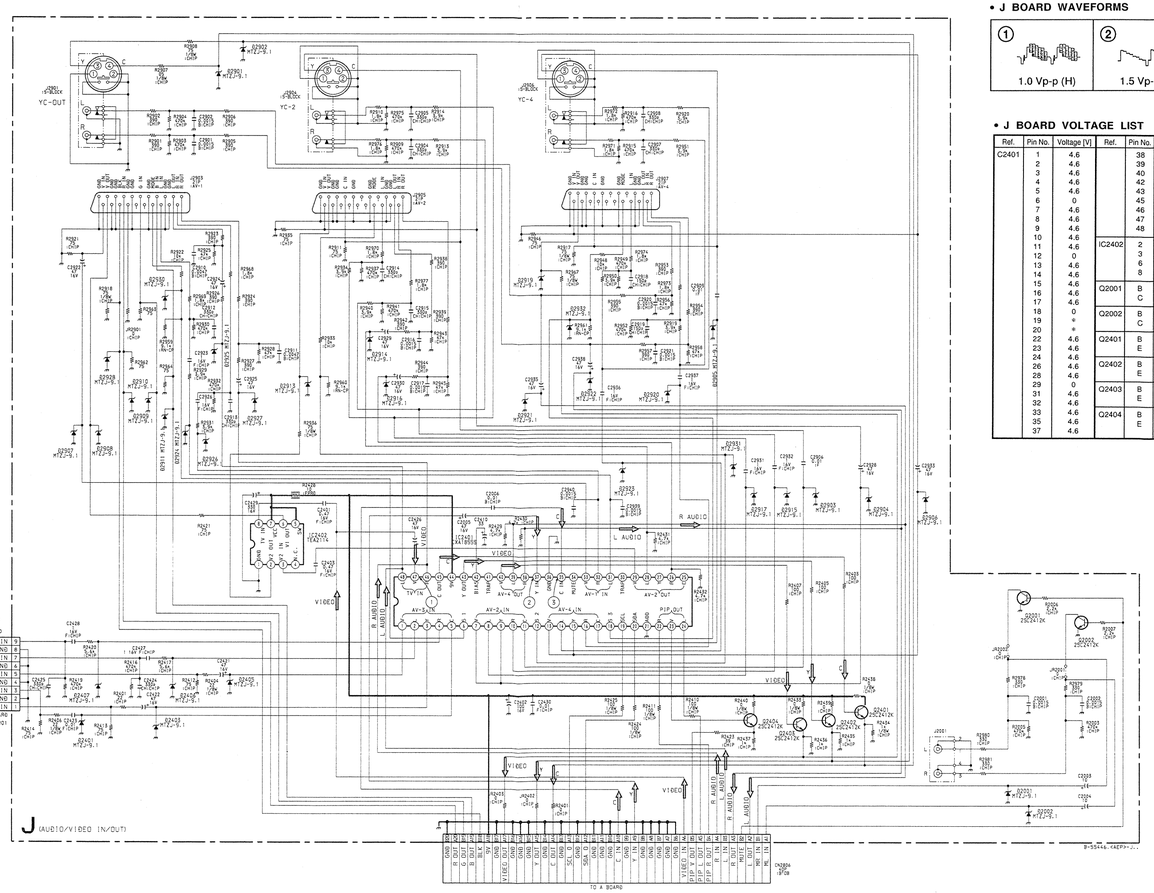

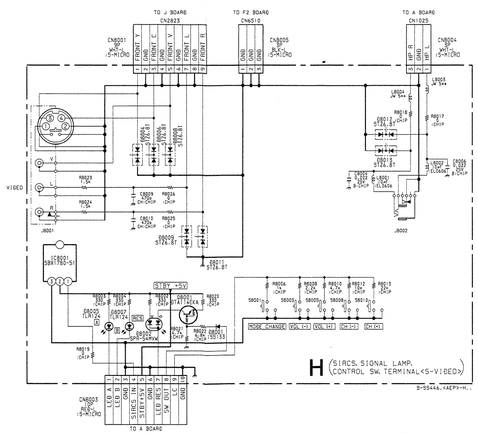

• H BOARD VOLTAGE LIST

Ref.	Pin No.	Voltage [V]
IC8001	1	4.4
	2	4.5

• G BOARD VOLTAGE LIST

Ref.	Pin No.	Voltage [V]
IC601	1	2.5
	3	13.7
Q601	B	83.9
	C	180.3
	E	84.6
Q602	B	0
	C	84.8
	E	0.6
Q603	B	14.3
	E	14.4

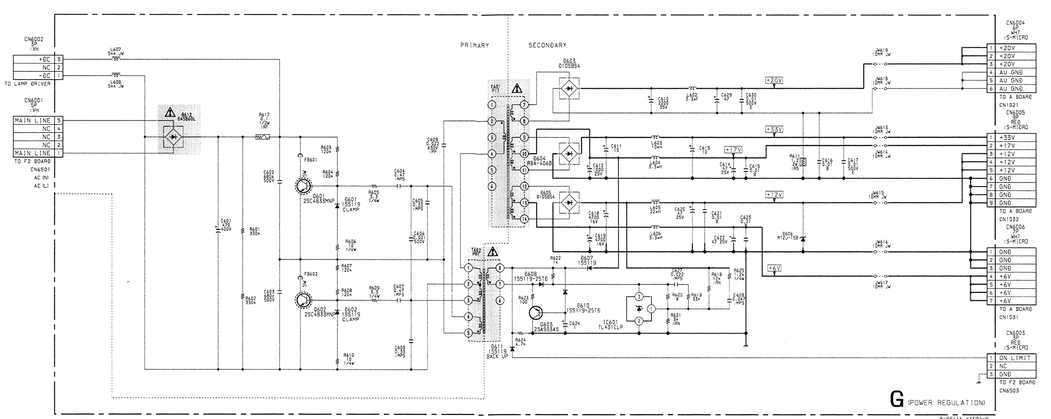

Schematic diagrams
F1 F2 G H J TA TB boards ➡

KL-37W2/37W2K RM-838
KL-50W2/50W2K/50W2U RM-838

F2 [POWER SUPPLY] G [POWER REGULATION] H [SIRCS, SIGNAL LAMP, CONTROL SW TERMINAL 〈S-VIDE(

— F2 Board —

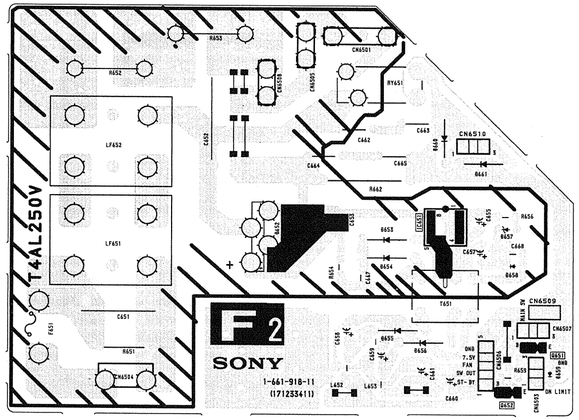

— H Board —

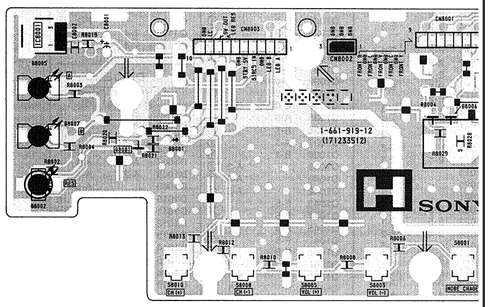

— J Board —

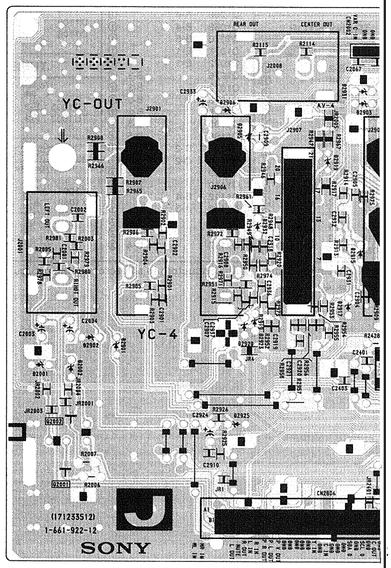

— G Board —

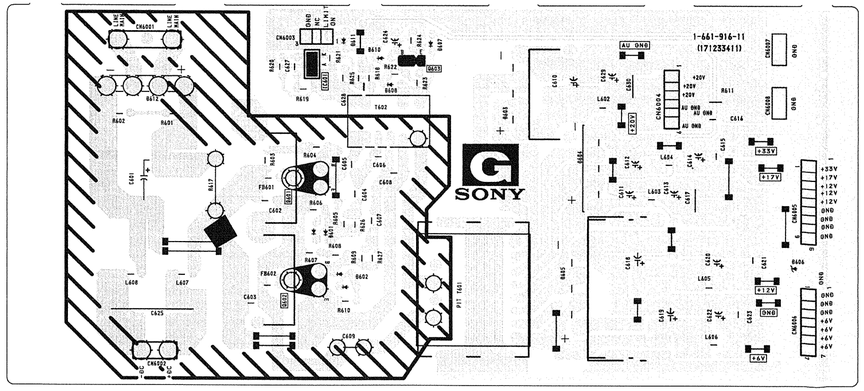

(2) Schematic Diagram of A (1/3) Board

• A (1/3) BOARD WAVEFORMS

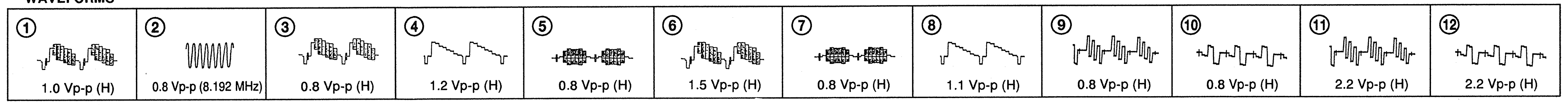

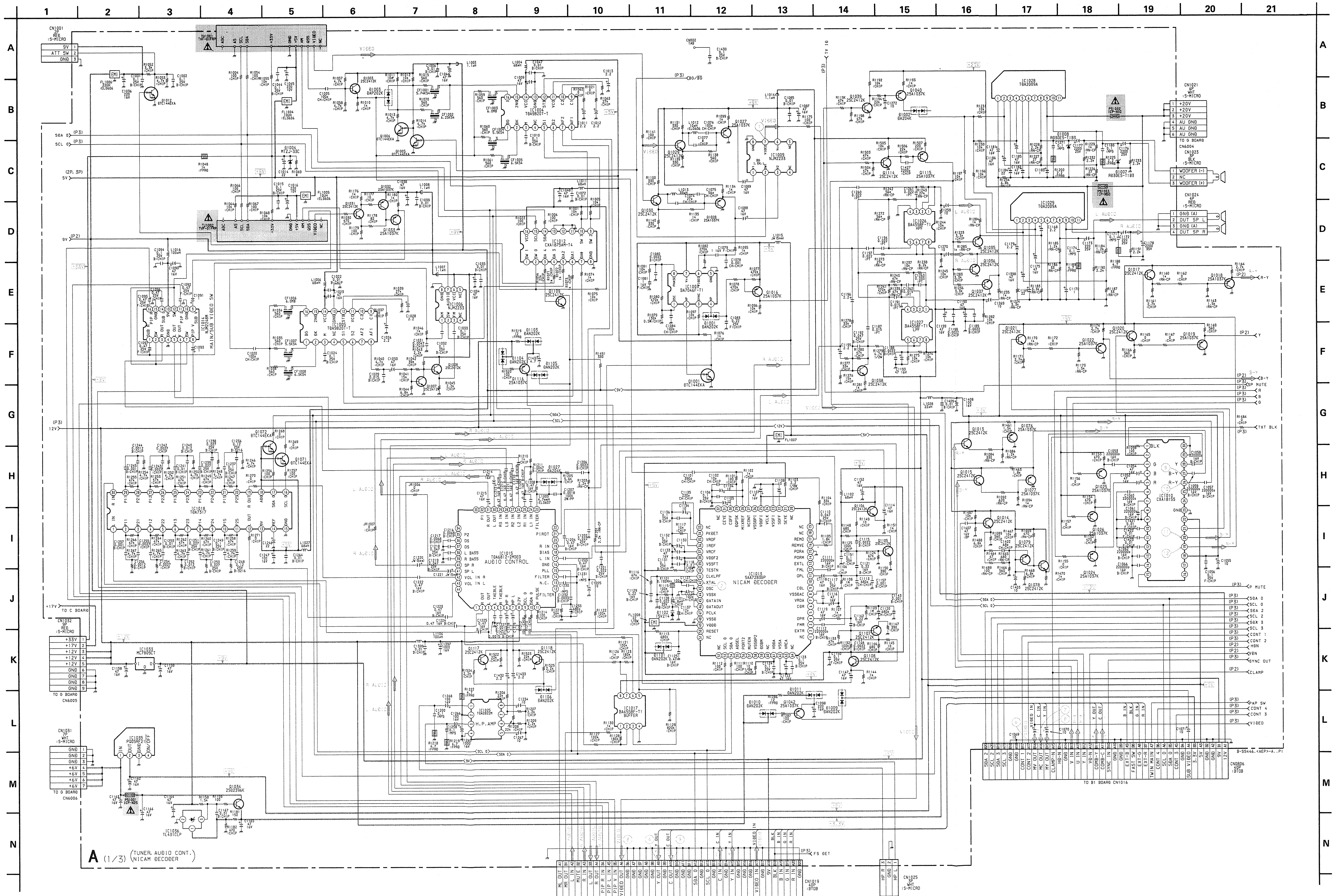

• A (1/3) BOARD VOLTAGE LIST

Ref.	Pin No.	Voltage [V]
IC1003	1	2.0
	2	4.5
	3	0.7
	4	4.9
	6	0
	8	1.8
IC1004	1	2.6
	2	0
	5	5.0
	6	5.0
	7	2.3
	8	2.2
	9	2.1
	10	2.2
	11	2.7
	12	4.4
	15	2.6
	16	0
IC1005	1	2.5
	2	0
	3	0
	5	4.6
	6	4.6
	7	2.3
	8	2.2
	9	2.3
	10	2.2
	11	2.7
	12	4.3
	15	2.6
	16	0
IC1006	1	5.5
	2	4.5
	3	5.4
	6	9.0
	7	4.7
IC1009	1	5.4
	2	0.9
	3	5.5
	6	8.9
	7	4.7
IC1010	1	0
	2	7.6
	3	5.0
	4	4.6
	5	4.6
	6	2.9
	7	2.9
	8	0
	9	0
	10	4.4
	11	4.4
	12	4.4
	13	2.9
	14	3.0
	15	0
	18	7.5
	19	3.0
	20	2.5
	21	3.1
	26	5.1
	27	5.3
	28	5.4
	29	2.7
	30	2.7
IC1012	1	0
	2	2.4
	3	4.6
	4	4.7
	5	4.6
	6	4.6
	7	4.6
	9	5.0
	10	5.0
	14	4.5
	15	4.5
IC1013	3	2.3
	4	2.4
	7	2.4
	8	0
	11	2.4
	12	2.4
	16	2.3
	17	2.4
	22	2.3
	27	2.4
	28	2.3
	29	2.3
	30	2.3
	34	0.2
	35	2.3
	36	2.3
	37	2.3
	41	4.0
	42	3.4
	43	2.4
	44	0
	45	2.7
	46	2.6
	47	2.3
	50	4.6
	53	3.8
	54	4.4
	61	4.8
	63	2.4
IC1014	1	4.5
	2	2.4
	3	3.9
	5	3.8
	6	3.6
	7	2.4
	8	2.7
	9	4.8
	11	4.5
	14	0
	16	4.6
IC1015	2	6.1
	3	6.1
	4	6.0
	5	0
	6	6.1
	7	6.1
	9	*
	10	*
	11	0.2
	13	3.1
	14	3.2
	15	4.0
	17	6.0
	18	6.0
	19	6.0
	21	6.1
	23	6.1
	24	6.1
	25	6.0
	26	6.0
	27	6.0
	28	6.0
	29	6.0
	30	6.1
	31	6.1
	32	0
	36	6.0
	37	6.0
	38	6.1
	39	6.1
	40	6,1
	41	6.1
	42	6.1
	43	6.1
IC1017	1	4.7
	2	5.4
	3	5.4
	5	5.4
	6	5.4
	7	4.7
IC1018	1	4.5
	2	4.5
	3	4.5
	4	4.5
	5	4.5
	6	4.5
	7	4.5
	8	4.5
	9	4.5
	10	4.5
	11	4.5
	12	4.5
	14	4.5
	16	4.4
	17	3.6
	19	4.5
	20	4.5
	21	4.5
	22	4.5
	23	4.5
	24	4.5
	25	4.5
	26	4.5
	27	4.5
	28	4.5
	29	4.5
	30	4.5
IC1025	1	5.6
	3	5.7
	5	0.6
	6	0
	7	0
	8	0.6
IC1026	1	4.5
	2	4.5
	3	4.5
	5	4.5
	6	4.5
	7	4.5
IC1027	1	4.5
	2	0
	3	4.3
	5	4.5
	6	4.5
	7	4.5
IC1028	1	1.1
	2	1.3
	3	9.6
	4	1.4
	5	1.0
	8	0.2
	10	0.2
IC1029	1	0.8
	2	1.5
	3	10.3
	4	1.2
	5	0
	8	0
	10	0
IC1033	I	12.3
	O	9.0
IC1036	1	2.5
	3	4.0
Q1001	B	4.5
	C	0.2
Q1002	B	0
	E	0
Q1003	B	4.4
	E	3.8
Q1004	B	0
	C	9.0
Q1005	B	1.0
	C	0
Q1007	B	0.6
	C	4.5
Q1008	B	4.5
	E	3.9
Q1009	B	8.1
	C	8.8
	E	8.9
Q1010	B	2.0
	C	1.8
	E	0
Q1012	B	4.6
	E	0
Q1013	B	5.5
	E	4.8
Q1014	B	3.5
	E	2.8
Q1015	B	5.4
	E	4.8
Q1016	B	4.4
	C	4.9
Q1017	B	3.9
	E	3.3
Q1018	B	1.5
	E	2.1
Q1019	B	3.7
	E	4.3
Q1020	B	4.3
	E	3.7
Q1021	B	3.9
	E	3.3
Q1022	B	1.9
	E	2.5
Q1024	B	0.7
	E	1.4
Q1025	B	0.7
	E	1.4
Q1026	B	0
	E	1.4
Q1027	B	1.2
	E	1.8
Q1028	B	1.2
	E	1.9
Q1029	B	1.8
	C	7.8
	E	1.2
Q1030	B	1.8
	C	7.8
	E	1.2
Q1031	B	2.1
	C	0
	E	1.5
Q1032	B	8.3
	C	3.0
	E	8.9
Q1033	B	3.0
	E	3.6
Q1034	B	3.9
	E	3.3
Q1035	B	0.2
	E	0
Q1036	B	0.2
	E	0
Q1037	B	0.2
	E	0
Q1038	B	1.3
	C	5.3
	E	0.7
Q1039	B	0.7
	C	0
Q1042	B	7.8
	C	–1.9
	E	8.7
Q1071	C	4.6
	E	4.6
Q1072	C	3.9
	E	4.0
Q1076	B	3.7
	E	4.3
Q1077	B	2.8
	E	3.4
Q1078	B	0
	E	5.8
Q1079	B	3.5
	C	6.4
	E	2.8
Q1105	B	2.3
	C	4.7
	E	0
Q1106	B	4.7
	E	4.1
Q1107	B	2.3
	C	4.7
	E	1.7
Q1108	B	4.7
	E	7.0
Q1109	B	0.7
	C	0.1
Q1110	B	0
	C	9.0

• A (1/3) BOARD
IC1003 BA7046F-T1

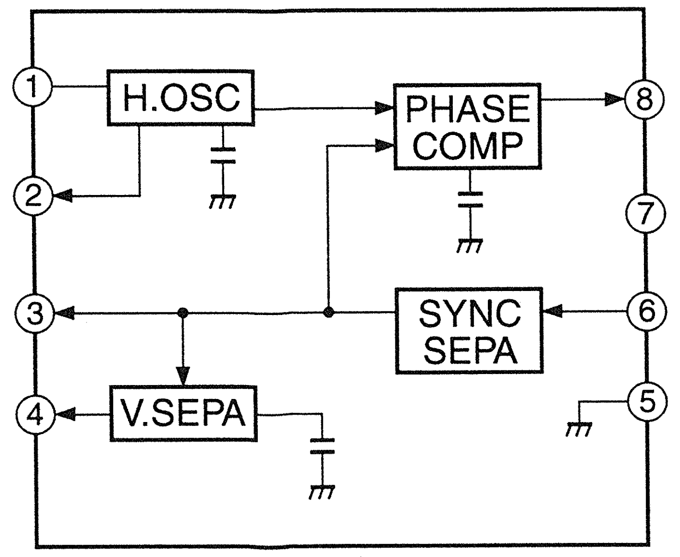

• A (1/3) BOARD
IC1004, 1005 TDA9820T-T

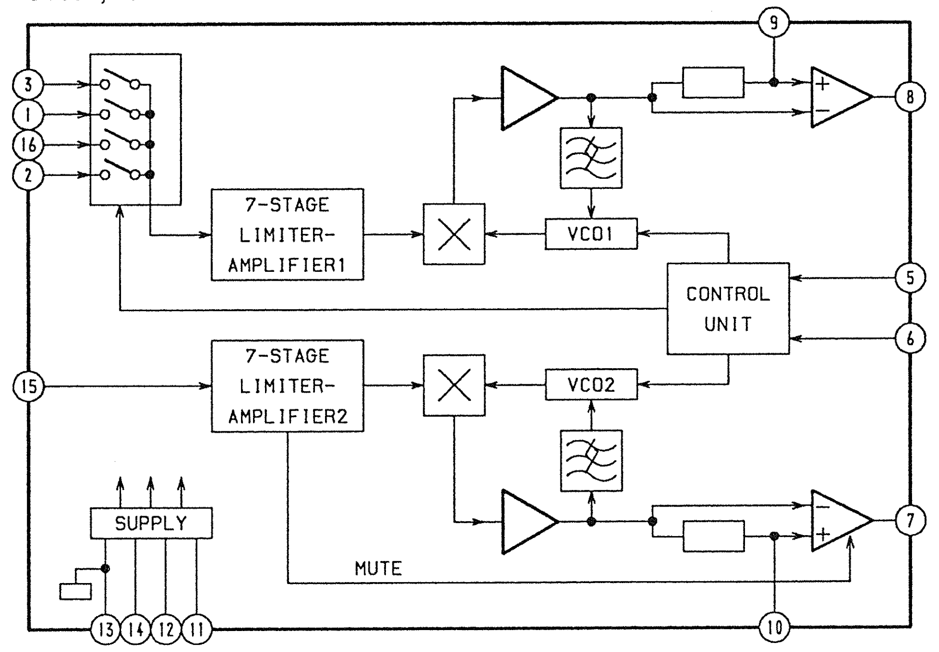

• A (1/3) BOARD
IC1028, 1029 TDA2009A

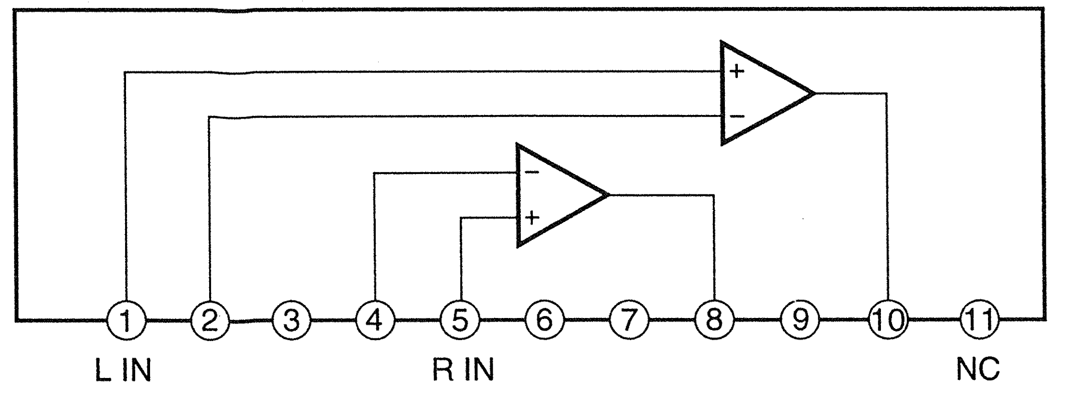

(3) Schematic Diagram of A (2/3) Board

(4) Schematic Diagram of A (3/3) Board

• A (2/3) BOARD WAVEFORMS

① 1.0 Vp-p (H)	② 1.0 Vp-p (H)	③ 1.2 Vp-p (H)	④ 0.9 Vp-p (H)
⑤ 0.9 Vp-p (H)	⑥ 3.0 Vp-p (H)	⑦ 2.5 Vp-p (H)	⑧ 2.5 Vp-p (H)

• A (2/3) BOARD VOLTAGE LIST

Ref.	Pin No.	Voltage [V]	Ref.	Pin No.	Voltage [V]	Ref.	Pin No.	Voltage [V]	Ref.	Pin No.	Voltage [V]	Ref.	Pin No.	Voltage [V]
IC1030	1	2.7		27	4.4		61	2.4		25	4.1		3	4.3
	3	3.2		28	4.5		62	3.5		26	4.5		5	4.0
	4	2.1		35	4.3		63	2.6		30	0		6	4.3
	5	3.8		36	4.3	IC1031	3	5.3		33	4.4	Q1047	B	0.2
	6	2.3		37	4.3		4	4.4		34	4.4		C	4.0
	7	3.8		39	4.4		5	4.4		35	4.7	Q1048	B	0.4
	8	2.1		40	4.4		6	4.5		44	2.5		C	4.0
	9	3.8		41	4.3		7	5.3		45	2.8	Q1049	B	0.7
	11	0.9		43	4.3		9	0		46	2.6		E	1.3
	12	1.3		44	4.3		10	0		47	8.9	Q1050	1	0.3
	13	0.7		45	4.3		12	9.0		48	1.6		2	0.4
	14	5.0		47	4.3	Q1043	B	2.2					5	0.3
	15	5.0		48	4.3		14	3.6					6	0
	16	5.0		49	4.3		15	4.0				Q1051	1	5.0
	17	5.0		52	4.5	Q1044	B	2.0					2	5.0
	20	0		53	2.6		E	2.7					5	0.2
	21	0		54	2.9								6	0.2
	22	2.2		55	7.3	Q1045	B	2.0						
	23	3.2		56	7.6		E	0						
	24	3.5		57	0.9									
	25	3.2		58	0.7	Q1046	2	4.0						

• A (3/3) BOARD VOLTAGE LIST

Ref.	Pin No.	Voltage [V]	Ref.	Pin No.	Voltage [V]	Ref.	Pin No.	Voltage [V]	Ref.	Pin No.	Voltage [V]	Ref.	Pin No.	Voltage [V]
IC1001	1	0		8	*		34	0.2		61	*		33	0.2
	2	0		9	*		35	1.5		62	0		34	1.8
	3	4.9		10	*		36	4.9		63	0		35	0
	4	3.7		11	*		37	0.1		64	*		38	1.3
	7	0.1		12	*		38	1.1		65	*		39	0.1
	8	0.1		13	*		39	4.4		66	0		40	4.1
	9	0.9		14	*		40	4.4		67	*		41	4.1
	10	0.1		15	*		41	0.2		68	*		42	4.1
	24	0.1		16	*		42	0.6					43	0
	25	4.9		17	*		43	4.7	IC1020	1	0		45	4.2
	28	2.5		18	0		44	4.7		2	2.1		56	0
	29	2.1		19	*		46	*		4	0.1		61	0
	47	4.5		20	4.4		48	0		5	0.1		62	0
	49	3.8		21	0		49	4.9		6	1.7		63	0
	59	4.2		22	4.2		50	4.4		7	1.8		64	0.1
	60	4.5		23	4.1		51	0		9	0		66	*
	61	3.5		25	0		52	4.4		10	1.0		67	*
	62	4.0		26	2.0		53	*		17	0.2		68	*
	63	0		27	2.1		54	4.4		23	2.9	IC1022	2	4.1
	64	0		28	2.2		55	4.6		26	0.3		3	0
				29	0		56	0		27	0.5		4	4.2
IC1019	1	*		30	3.7		57	*		28	0		6	4.2
	2	*		31	2.1		58	*		29	0.2		7	4.1
	3	*		32	4.8		59	0		30	0.3		8	0.1
	7	*		33	4.8		60	*		31	0.3			
										32	0			

Ref.	Pin No.	Voltage [V]	Ref.	Pin No.	Voltage [V]	Ref.	Pin No.	Voltage [V]	Ref.	Pin No.	Voltage [V]	Ref.	Pin No.	Voltage [V]
	9	0			C	0.1	Q1060	B	0		C	0.1		3	4.9
	10	0.3	Q1053	B	0.4		C	4.5	IC1007	IN	6.0		4	4.5
	11	1.8		C	4.9	Q1061	B	0		OUT	4.5		5	0.7
	23	0.2	Q1054	B	3.8		C	*	IC1008	IN	8.8		6	4.9
IC1023	1	4.4		C	3.5	Q1062	B	0.2		OUT	8.3		8	4.9
	5	4.5	Q1055	B	−1		C	0.1	IC1039	1	0.8		10	0
	6	4.5		C	0	Q1064	B	0.1		2	0.1		11	0
IC1024	2	0.1	Q1056	B	3.8		C	4.0		3	0.1		12	4.9
	3	1.8		C	12.3	Q1065	B	3.8		4	0.1		13	4.9
	5	2.1		E	3.2		E	3.2		5	0.7	IC1038	1	3.2
	8	2.4	Q1057	B	4.3	Q1066	B	0		6	0.1		2	0.7
Q1058	B	0.3		C	0.9		E	0.7		7	0		3	4.9
	C	2.1		E	0.8	Q1067	B	0		8	4.4		4	4.9
Q1059	B	9.5	Q1058	B	0.3		E	0.7		9	1.9		5	0.7
	C	−0.2		C	2.1	Q1068	B	0		10	1.9		6	4.9
Q1060	B	0					E	0.7		11	4.4		8	4.9
	C	4.5				Q1069	B	1.6		12	1.9		10	0
Q1070	B	4.0					C	2.3		13	1.9		11	0
										14	4.9		12	4.9
									IC1037	1	1.6		13	4.9
										2	0.7			

• A (3/3) BOARD WAVEFORMS

① 1.5 Vp-p (20.5 MHz)	② 5.5 Vp-p (4 MHz)

Schematic diagram
◀ A (1/3) board

Schematic diagram
A (2/3), A (3/3) board ▶

(5) Schematic Diagram of B1 (1/3) Board

• B1 (1/3) BOARD WAVEFORMS

① 1.5 Vp-p (H)	② 2.0 Vp-p (H)	③ 1.0 Vp-p (H)	④ 1.2 Vp-p (H)	⑤ 0.8 Vp-p (H)	⑥ 1.5 Vp-p (H)
⑦ 1.5 Vp-p (H)	⑧ 1.3 Vp-p (H)	⑨ 3.5 Vp-p (H)	⑩ 3.5 Vp-p (H)	⑪ 1.0 Vp-p (7.7 MHz)	⑫ 0.8 Vp-p (14.3 MHz)
⑬ 2.0 Vp-p (2.69 MHz)	⑭ 1.5 Vp-p (H)	⑮ 1.7 Vp-p (H)	⑯ 0.7 Vp-p (H)	⑰ 0.9 Vp-p (H)	⑱ 0.9 Vp-p (H)

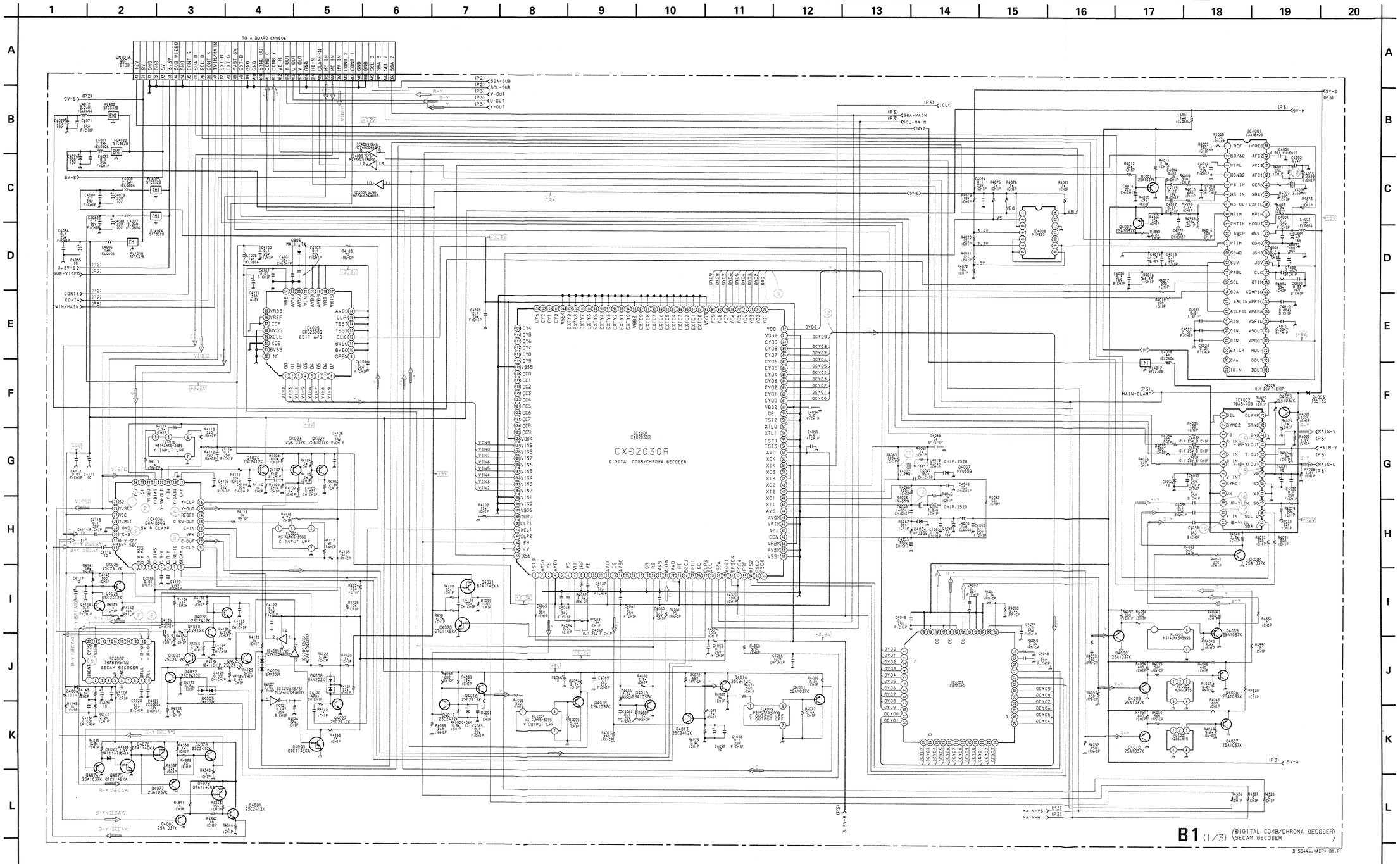

• B1 (1/3) BOARD VOLTAGE LIST

Ref.	Pin No.	Voltage [V]	Ref.	Pin No.	Voltage [V]
IC4001	1	3.8		2	0
	2	0.4		3	0
	3	5.6		4	3.1
	5	3.7		5	0.5
	6	3.1		6	0
	7	3.2		7	0
	8	1.8		8	3.1
	11	0.6		9	0.4
	14	0.1		10	1.6
	15	4.0		11	1.8
	16	3.3		12	3.1
	30	4.0		13	0.3
	32	4.0		14	*
	35	2.5	Q4001	B	5.4
	40	4.2		E	6.0
	44	2.5	Q4002	B	4.9
	45	4.6		C	0.6
	46	4.6			
	47	4.6	Q4003	B	1.8
IC4002	3	0.1		C	2.1
	4	8.4		E	2.4
	5	8.3	Q4004	B	1.9
	6	8.4		E	2.5
	7	8.4	Q4005	B	1.2
	10	6.9		E	1.9
	11	7.1	Q4006	B	1.3
	12	6.9		E	1.9
	13	4.5	Q4007	B	1.3
	14	3.5		E	1.9
	15	6.1	Q4008	B	0.8
	19	5.5		E	1.4
	20	5.8	Q4009	B	0.8
	21	5.5		E	1.6
	24	2.2	Q4010	B	0.8
IC4003	1	1.5		E	1.4
	2	1.5	Q4011	B	4.9
	3	1.5		E	5.5
	4	1.6	Q4013	B	2.2
	5	1.3		C	6.1
	6	0		E	1.5
	7	0	Q4015	B	1.0
	8	1.2		E	1.7
	9	1.4	Q4017	B	2.1
	10	1.4		C	0
	11	1.3		E	0
	12	1.3	Q4018	B	4.8
	13	1.3		C	0
	14	1.4		E	5.4
	15	1.4	Q4020	B	0.2
	16	1.3		C	4.5
	17	1.4	Q4021	B	4.9
	18	1.8		C	0.3
	19	1.4	Q4022	B	3.2
	20	1.6		C	0.2
	21	1.3	Q4023	B	3.4
	22	1.3		C	0.3
	23	1.2	Q4024	B	2.9
	24	1.4		E	2.2
	25	1.4	Q4025	B	3.5
	26	1.3		E	2.9
	27	1.4	Q4026	B	3.5
	28	1.4		C	3.5
	29	1.4		E	2.9
	30	1.6	Q4027	B	0.6
	31	0		C	0.5
	32	0	Q4028	B	7.5
	33	0		E	6.9
	35	0	Q4029	B	0
	36	2.1		C	7.6
	37	2.1		E	0
	38	2.6	Q4030	B	3.4
	42	0.8		C	0
	44	0		E	2.8
	46	0	Q4031	B	0
IC4006	4	2.9		C	3.4
	5	2.9	Q4032	B	0.4
	6	4.2		C	8.7
	7	0		E	1.0
	8	0	Q4074	B	0.3
	9	0.5		E	0.9
	10	2.5	Q4075	B	0.5
	11	3.1		C	7.2
	12	2.9	Q4076	B	3.6
	13	2.9		C	3.0
	15	2.4	Q4077	B	3.1
	16	0.2		E	3.7
	17	3.1	Q4078	B	3.6
	19	2.9		E	3.1
	20	3.0	Q4079	B	7.2
	21	2.9		C	4.2
	22	3.6	Q4080	B	3.0
	23	0		E	3.6
	24	3.6	Q4081	B	7.2
	25	0		E	4.2
	26	3.6			
	30	4.2			
	31	0 (4.0)			
	32	0 (4.0)			
IC4007	1	(4.4)			
	5	(7.9)			
	9	(3.4)			
	10	(4.3)			
	11	(3.1)			
	12	(3.0)			
	19	(0.7)			
	20	(6.9)			
IC4008	1	0.5			
	2	0.4			
	4	3.2			
	5	0.6			
	6	2.1			
	7	0.6			
	8	1.0			
	9	0.7			
	14	0.7			
IC4009	1	3.1			

Schematic diagram
← B1 (1/3) board

Schematic diagram
B1 (2/3) board →

(6) Schematic Diagram of B1 (2/3) Board

• B1 (2/3) BOARD VOLTAGE LIST

Ref.	Pin No.	Voltage [V]
IC4013	1	3.7
	2	3.3
	3	2.0
	5	3.4
	6	2.9
	7	3.2
	8	1.8
	11	0.7
	14	0
	15	4.5
	16	4.3
	30	4.0
	32	4.0
	35	2.4
	44	2.5
	45	4.6
	46	4.6
	47	4.3
IC4014	4	2.9
	5	2.9
	6	4.2
	7	0
	8	0
	9	0.5
	10	2.5
	11	3.1
	12	2.9
	13	2.9
	15	2.4
	16	0.2
	17	3.1
	19	2.9
	20	3.0
	21	2.9
	24	3.6
	25	0
	26	3.6
IC4014	30	4.2
	31	0 (4.0)
	32	0 (4.0)
IC4015	1	(4.2)
	9	(3.0)
	10	(4.2)
	11	(3.0)
	12	(3.0)
	19	(0.9)
	20	(6.8)
IC4016	1	0.5
	2	0.4
	4	3.2
	5	0.6
	6	2.1
	7	0.7
	8	1.0
	9	0.7
	14	0.7
IC4026	1	3.1
	2	0
	3	0
	4	3.1
	5	0.6
	6	3.0
	8	3.2
	9	0.5
	10	3.2
	11	0
	12	3.1
	13	0.5
Q4034	B	1.9
	E	2.0
Q4035	B	3.0
	C	1.3
Q4036	B	1.0
	E	1.7
Q4038	B	2.2
	C	6.2
	E	1.6
Q4039	B	5.0
	E	5.6
Q4040	B	6.2
	C	8.9
	E	5.5
Q4043	B	5.6
	E	6.2
Q4045	B	3.2
	C	0
Q4046	B	3.2
	C	0.4
Q4048	B	3.5
	E	2.9
Q4049	B	3.5
	C	3.5
	E	2.9
Q4050	B	7.5
	E	7.0
Q4051	B	3.5
	C	7.6
	E	2.9
Q4052	B	0
	C	3.4
Q4053	B	0.4
	C	8.7
	E	1.0
Q4054	B	0
	C	0
	E	0
Q4055	B	0.6
	C	0.5
Q4082	B	0.4
	E	1.0
Q4083	B	0.7
	C	0
Q4084	B	7.0
	C	5.1
Q4085	B	3.0
	E	0
Q4086	B	3.6
	E	0.3
Q4087	B	3.0
	E	3.6
Q4088	B	7.0
	C	5.2
Q4089	B	3.6
	E	3.6

• B1 (2/3) BOARD WAVEFORMS

①	②
1.0 Vp-p (7.7 MHz)	0.8 Vp-p (1.43 MHz)

B1 (2/3) (DIGITAL COMB/CHROMA DECODER<SUB-VIDEO>, SECAM DECODER <SUB-VIDEO>)

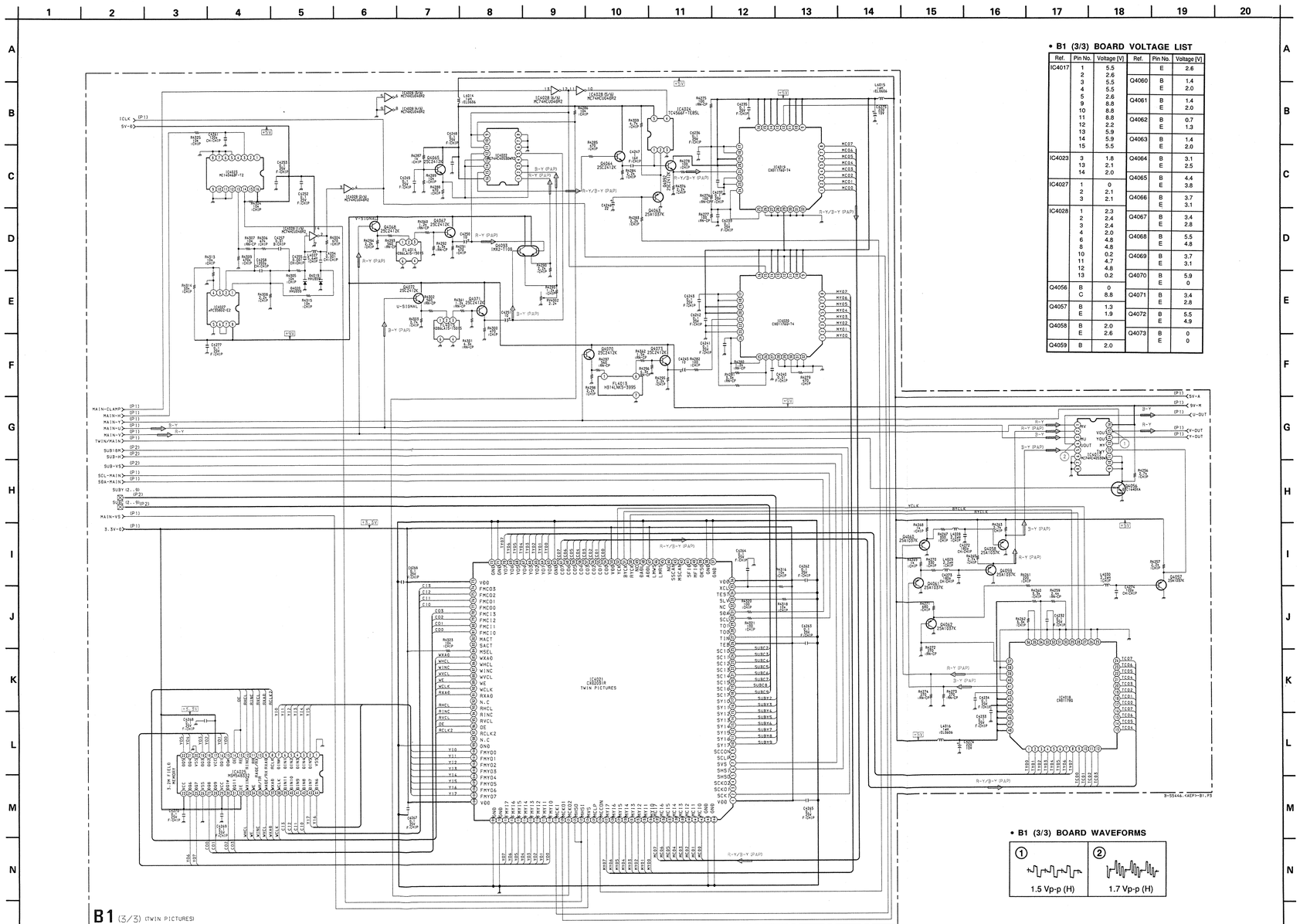

• B1 (3/3) BOARD VOLTAGE LIST

Ref.	Pin No.	Voltage [V]	Ref.	Pin No.	Voltage [V]
IC4017	1	5.5		E	2.6
	2	2.6	Q4060	B	1.4
	3	5.5		E	2.0
	4	5.5	Q4061	B	1.4
	5	2.6		E	2.0
	9	8.8	Q4062	B	0.7
	10	8.8		E	1.3
	11	8.8	Q4063	B	1.4
	12	2.2		E	2.0
	13	5.9	Q4064	B	3.1
	14	5.9		E	2.5
	15	5.5	Q4065	B	4.4
IC4023	3	1.8		E	3.8
	13	2.1	Q4066	B	3.7
	14	2.0		E	3.1
IC4027	1	0	Q4067	B	3.4
	2	2.1		E	2.8
	3	2.1	Q4068	B	5.5
IC4028	1	2.3		E	4.8
	2	2.4	Q4069	B	3.7
	3	2.4		E	3.1
	4	2.0	Q4070	B	5.9
	6	4.8		E	0
	8	4.8	Q4071	B	3.4
	10	0.2		E	2.8
	11	4.7	Q4072	B	5.5
	12	4.8		E	4.9
	13	0.2	Q4073	B	0
Q4056	B	0		E	0
	C	8.8			
Q4057	B	1.3			
	E	1.9			
Q4058	B	2.0			
	E	2.6			
Q4059	B	2.0			

• B1 (3/3) BOARD WAVEFORMS

①	②
1.5 Vp-p (H)	1.7 Vp-p (H)

— B1 Board (Conductor Side) —

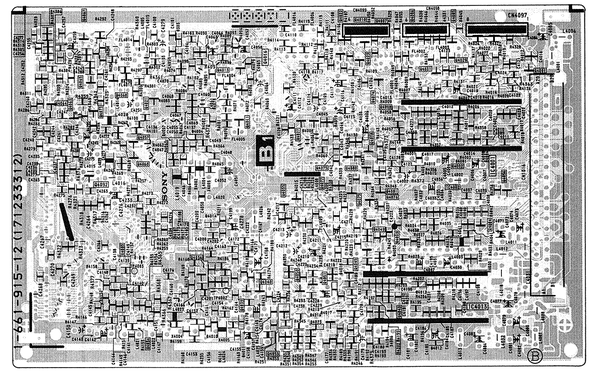

• : Pattern from the side which enables seeing.
• : Pattern of the rear side.

— B1 Board (Component Side) —

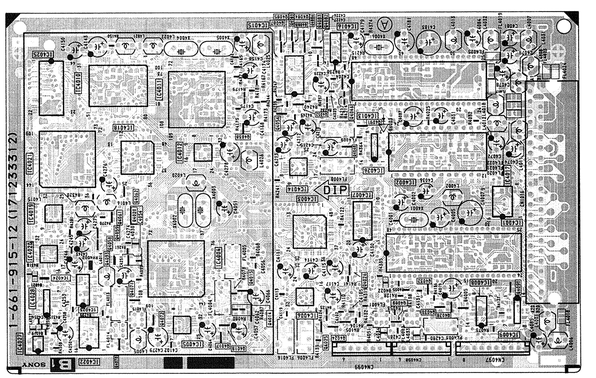

• : Pattern from the side which enables seeing.
• : Pattern of the rear side.

B1 BOARD

Terminal name of semiconductors in silk screen printed circuit (✻)

Ref.	✻
Q4001, Q4003 – Q4008, Q4010, Q4011, Q4013, Q4016, Q4021 – Q4023, Q4027, Q4029, Q4031, Q4034 – Q4036, Q4039, Q4040, Q4043, Q4045, Q4047, Q4049 – Q4051, Q4053, Q4055 – Q4057, Q4060, Q4063 – Q4065, Q4067, Q4068, Q4073 – Q4081, Q4092	①
Q4002, Q4009, Q4014, Q4015, Q4017, Q4018, Q4020, Q4024 – Q4026, Q4028, Q4030, Q4032, Q4038, Q4046, Q4048, Q4052, Q4054, Q4058, Q4059, Q4061, Q4062, Q4070 – Q4072, Q4082 – Q4091	②
Q4093	⑨
D303, D4004, D4006, D4007, D4010, D4011, D4014, D4018 – D4020, D4022, D4023	③
D4008, D4009, D4015 – D4017	④
D4005	⑤

✻: Refer to Treminal name of semiconductors in silk screen printed circuit (see page 44)

• C (1/2) BOARD VOLTAGE LIST

Ref.	Pin No.	Voltage [V]
IC5007	1	11.4
	0	5.0
IC5201	2	0
	3	0
	4	3.1
	5	0
	6	0
	7	7.0
	8	7.0
	9	7.0
	10	7.0
	11	0
	14	7.0
	15	7.0
	20	7.0
	21	7.0
	22	7.0
	23	2.8
	25	2.3
	26	0
	27	4.2
	28	0
	29	3.7
	30	3.2
	31	1.7
	32	4.6
	33	1.7
	34	1.7
	39	2.6
	40	2.6
	41	2.6
	42	3.2
	47	4.9
IC5401	2	0
	3	3.2
	4	3.2
	5	4.1
	6	0
	7	3.2
	8	7.1
	9	7.1
	10	6.9
	11	7.1
	14	7.1
	15	7.1
	20	7.1
	21	7.1
	22	7.2
	23	3.0
	25	2.3
	26	0
	27	4.2
	28	4.3
	29	3.7
	30	3.9
	31	1.7
	32	1.7
	33	1.7
	34	4.6
	39	2.6
	40	2.6
	41	2.6
	42	3.2
	47	0
IC5601	2	0
	3	3.2
	4	3.2
	5	3.9
	6	0
	7	0
	8	6.8
	9	6.8
	10	6.6
	11	6.8
	14	6.8
	15	6.8
	20	6.8
	21	6.8
	22	6.6
	23	2.4
	25	2.3
	26	0
	27	4.2
	28	4.2
	29	3.5
	30	3.3
	31	1.7
	32	4.6
	33	1.7
	34	1.7
	39	0
	40	0
	41	0
	42	3.2
	47	5.9
IC5602	1	0.2
	2	0.2
	3	4.4
	4	4.0
	5	8.5
	6	8.5
	7	0.4
	8	0
	9	0
	10	0
	11	8.9
	12	0
	13	8.9

Ref.	Pin No.	Voltage [V]
	14	4.5
	15	4.5
Q5203	B	2.2
	E	2.8
Q5204	B	2.2
	E	1.9
Q5205	B	3.0
	C	0
	E	2.4
Q5206	B	2.3
	C	0
	E	3.0
Q5207	B	5.2
	C	3.1
	E	5.9
Q5209	B	3.1
	C	8.9
	E	2.6
Q5210	B	5.9
	E	5.2
Q5214	B	7.0
	E	7.6
Q5215	B	7.0
	E	6.4
Q5216	B	7.6
	E	7.0
Q5217	B	6.4
	E	7.0
Q5218	B	7.0
	E	0
Q5219	B	7.0
	E	0
Q5220	B	7.6
	E	7.0
Q5221	B	6.2
	E	0
Q5222	B	7.0
	E	7.6
Q5223	B	0
	E	6.4
Q5224	B	7.6
	E	7.0
Q5225	B	6.4
	E	7.0
Q5226	B	7.0
	E	0
Q5227	B	7.0
	E	0
Q5228	B	7.6
	E	0
Q5229	B	6.4
	E	0
Q5234	B	0.7
	C	0
	E	0
Q5235	B	5.0
	C	1.0
	E	0
Q5237	B	1.7
	C	5.9
	E	1.0
Q5238	B	1.0
	E	1.7
Q5403	B	2.2
	E	2.9
Q5404	B	2.2
	E	0
Q5405	B	3.1
	C	5.9
	E	2.4
Q5406	B	2.4
	E	3.1
Q5407	B	5.2
	C	3.0
	E	5.9
Q5409	B	3.0
	E	2.7
Q5415	B	0
	E	7.7
Q5416	B	7.1
	E	6.5
Q5418	B	0
	E	7.1

Ref.	Pin No.	Voltage [V]
Q5419	B	7.1
	E	7.7
Q5420	B	7.1
	E	6.5
Q5421	B	7.7
	E	7.1
Q5422	B	6.5
	E	0
Q5423	B	7.1
	E	7.7
Q5424	B	7.1
	E	6.5
Q5425	B	7.7
	E	7.1
Q5426	B	6.5
	E	7.1
Q5427	B	7.1
	E	7.7
Q5428	B	7.0
	E	6.5
Q5429	B	7.7
	E	7.1
Q5430	B	6.4
	E	7.1
Q5433	B	3.0
	C	1.0
	E	4.7
Q5435	B	1.7
	C	5.9
	E	1.0
Q5603	B	2.2
	E	2.8
Q5604	B	2.1
	E	1.9
Q5605	B	2.9
	C	5.9
	E	2.3
Q5606	B	2.3
	E	2.9
Q5607	B	5.2
	C	0
	E	5.9
Q5609	B	2.9
	E	2.6
Q5614	B	6.8
	E	7.4
Q5615	B	6.8
	E	6.2
Q5616	B	7.4
	E	6.8
Q5617	B	6.2
	E	6.8
Q5618	B	6.8
	E	6.8
Q5619	B	6.8
	E	7.4
Q5620	B	7.4
	E	6.8
Q5621	B	6.2
	E	6.8
Q5622	B	6.8
	E	6.2
Q5623	B	6.8
	E	6.2
Q5624	B	7.4
	E	6.8
Q5625	B	6.2
	E	6.8
Q5626	B	6.8
	E	7.7
Q5627	B	6.8
	E	6.2
Q5628	B	7.4
	E	6.8
Q5629	B	6.2
	E	6.8
Q5632	B	5.0
	C	1.0
	E	5.0
Q5634	B	1.7
	C	5.9
	E	1.0

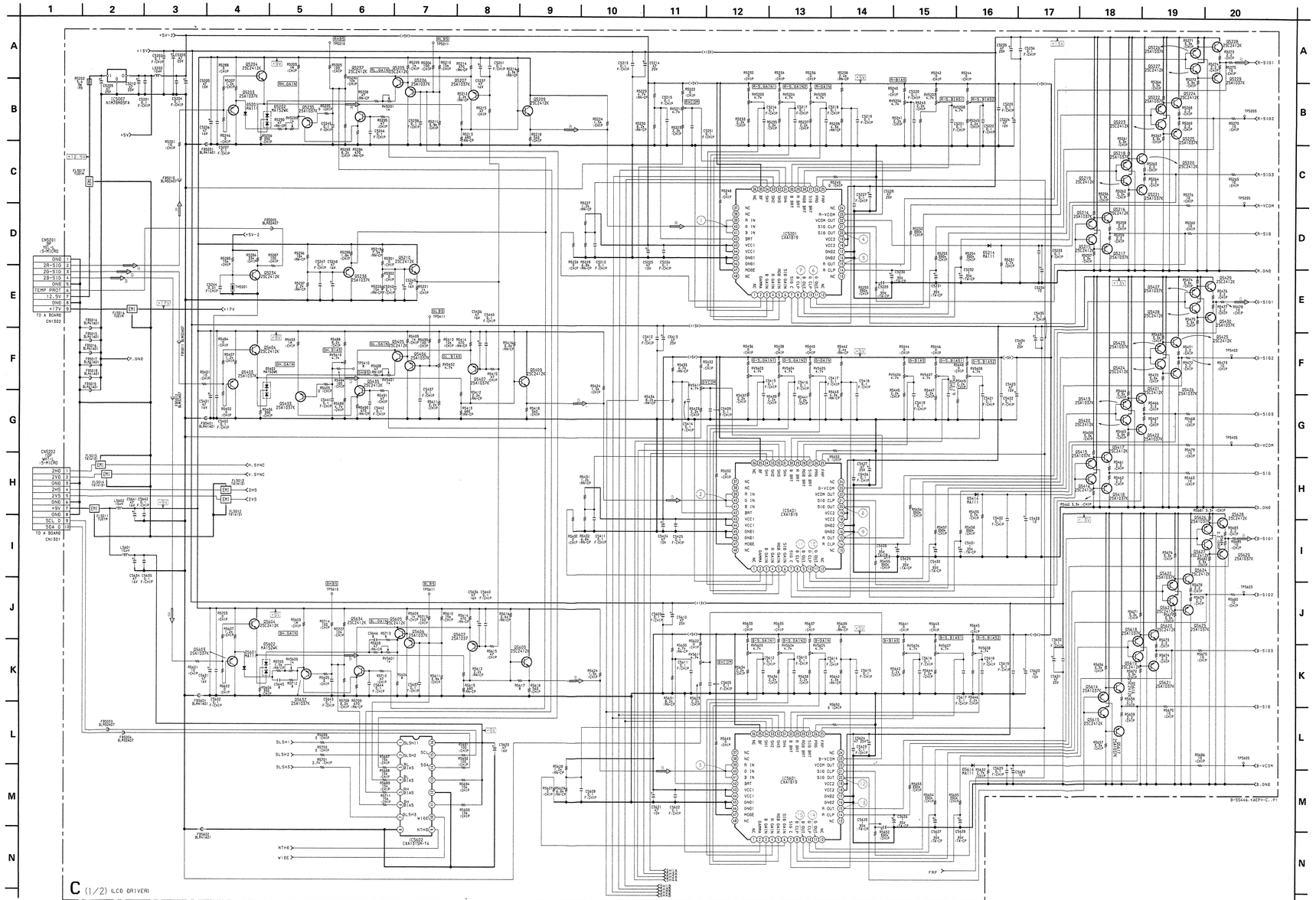

• C (1/2) BOARD WAVEFORMS

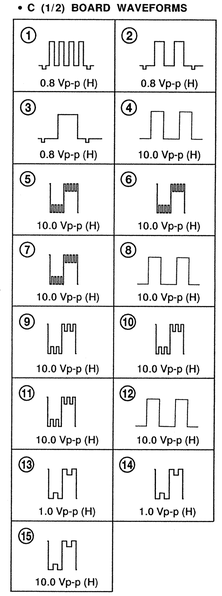

Schematic diagram
← B1 (3/3) board

Schematic diagram
C (1/2) board →

(9) Schematic Diagram of C (2/2) Board

• C (2/2) BOARD VOLTAGE LIST

Ref.	Pin No.	Voltage [V]
IC5002	1	2.3
	2	2.3
	3	2.3
	4	0
	5	0
	6	4.6
	7	4.6
IC5003	1	0.9
	2	0.9
	3	1.4
	4	4.6
IC5005	1	16.8
	2	15.5
	4	16.8
IC5006	1	15.5
	2	13.3
	4	1.3
Q5001	B	0.1
	C	4.1
	E	0

• C (2/2) BOARD WAVEFORMS

① 5.0 Vp-p (H)

② 4.0 Vp-p (V)

C BOARD

Terminal name of semiconductors in silk screen printed circuit (✻)

Ref.	✻
Q5404, Q5409, Q5417, Q5421, Q5425, Q5426, Q5429, Q5430, Q4533, Q5609, Q5616, Q5617, Q5620, Q5621, Q5624, Q5625, Q5628, Q5629	①
Q5001, Q5203 – Q5207, Q5209, Q5210, Q5214 – Q5229, Q5234, Q5235, Q5237, Q5238, Q5403, Q5405 – Q5407, Q5415, Q5416, Q5418 – Q5420, Q5422 – Q5424, Q5427, Q5428, Q5435, Q5603 – Q5607, Q5614, Q5615, Q5618, Q5619, Q5622, Q5623, Q5626, Q5627, Q5632, Q5634	②
D5001, D5003, D5034, D5035, D5040, D5041, D5043 – D5047, D5049, D5201, D5214, D5414, D5601, D5614	③
D5202, D5402, D5602	⑨

✻: Refer to Treminal name of semiconductors in silk screen printed circuit (see page 44)

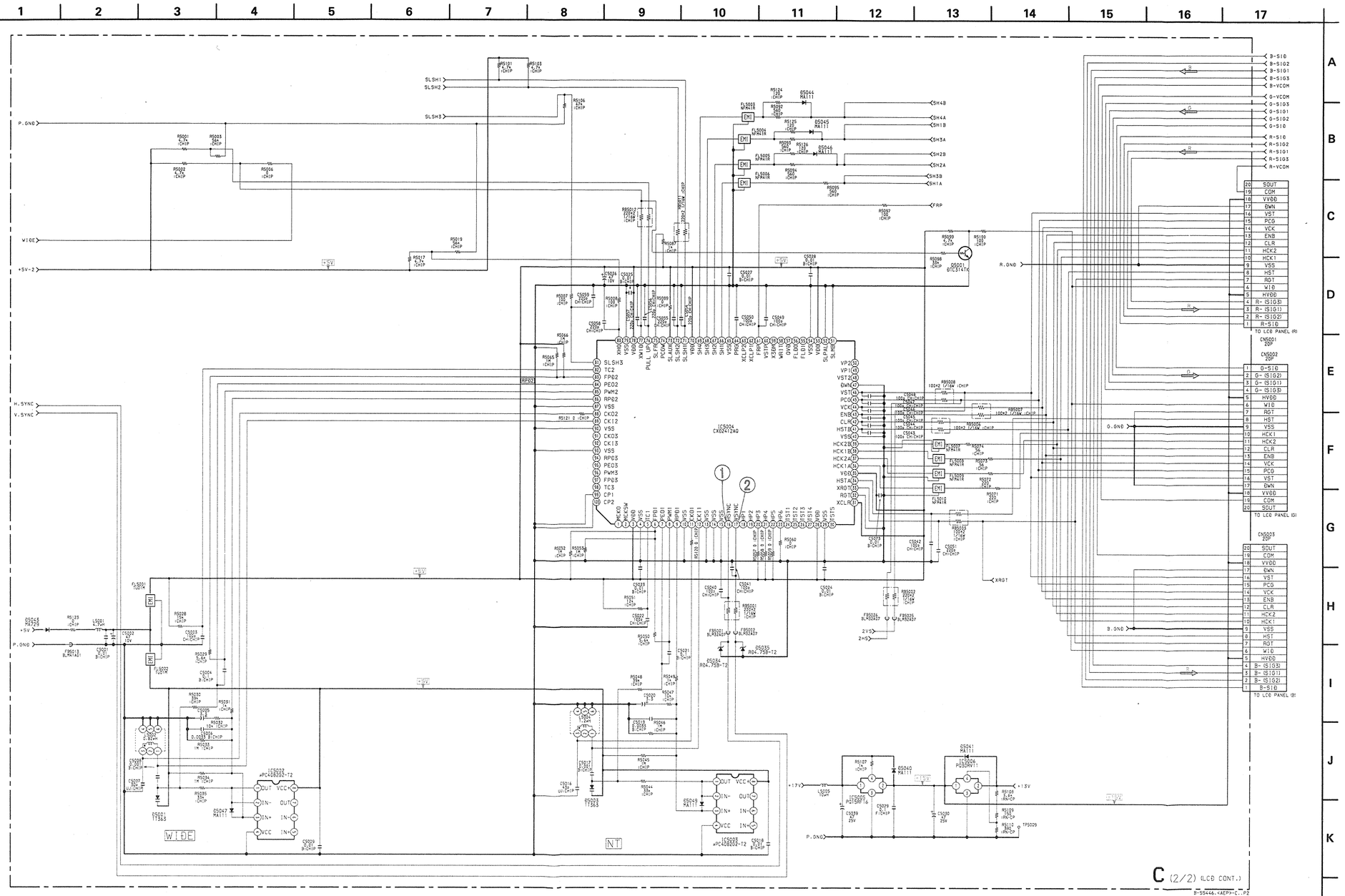

Schematic diagram ← C (2/2) board

— C Board (Conductor Side) —

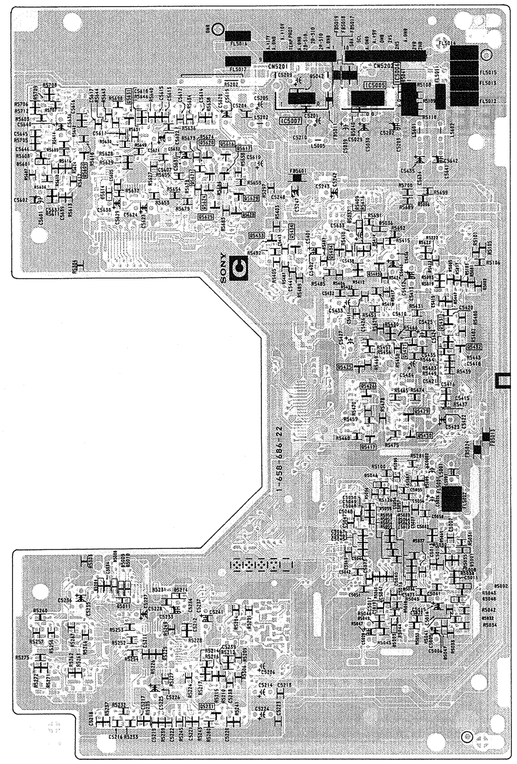

• : Pattern from the side which enables seeing.
• : Pattern of the rear side.

— C Board (Component Side) —

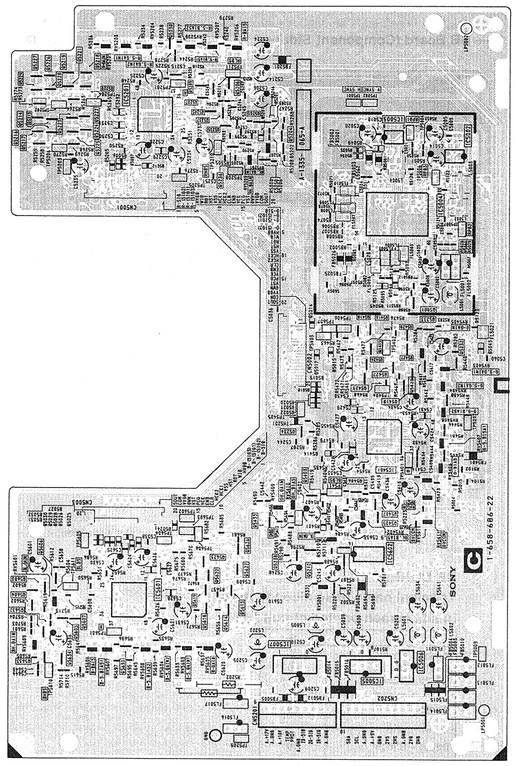

• : Pattern from the side which enables seeing.
• : Pattern of the rear side.

Schematic diagram BB (1/3) board →

(10) Schematic Diagram of BB (1/3) Board

BB A/D CONV., D/A CONV. "ASPECT RATIO" CONV. MEMORY BLOCK

— BB Board (Conductor Side) —

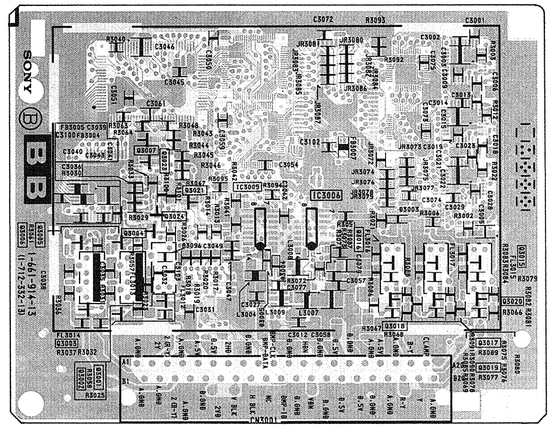

- ▒▒▒ : Pattern from the side which enables seeing.
- ▒▒▒ : Pattern of the rear side.

— BB Board (Component Side) —

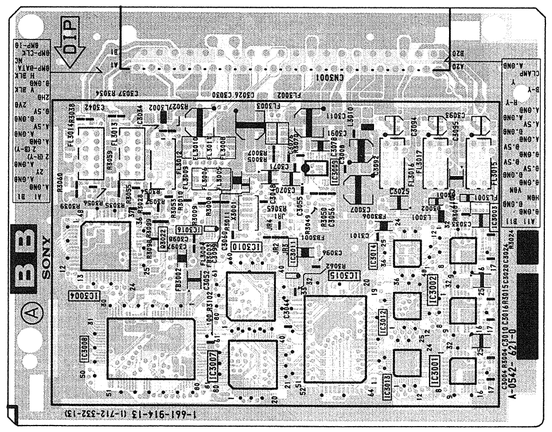

- ▒▒▒ : Pattern from the side which enables seeing.
- ▒▒▒ : Pattern of the rear side.

BB BOARD
Terminal name of semiconductors in silk screen printed circuit (✻)

Ref.	✻
Q3001 – Q3007, Q3015 – Q3021, Q3023, Q3024	①
Q3022	②
D3001 – D3005	③

✻: Refer to Treminal name of semiconductors in silk screen printed circuit (see page 44)

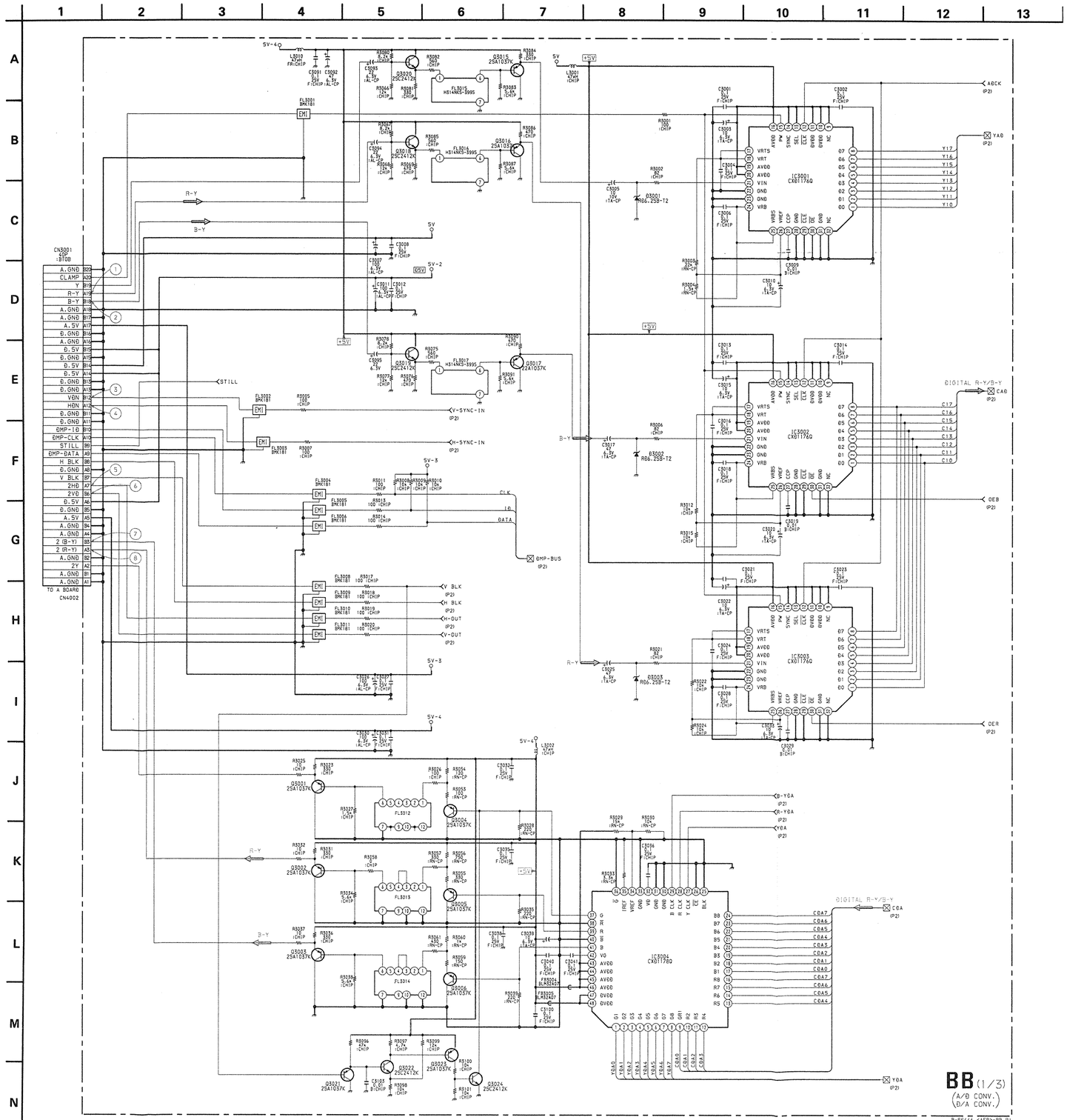

• BB (1/3) BOARD WAVEFORMS

① 1.0 Vp-p (H)

② 1.2 Vp-p (H)

③ 3.0 Vp-p (H)

④ 3.2 Vp-p (H)

⑤ 4.3 Vp-p (H)

⑥ 4.5 Vp-p (H)

⑦ 1.0 Vp-p (H)

⑧ 1.0 Vp-p (H)

• BB (1/3) BOARD VOLTAGE LIST

Ref.	Pin No.	Voltage [V]	Ref.	Pin No.	Voltage [V]	Ref.	Pin No.	Voltage [V]
IC3001	1	2.1		2	2.7		21	3.0
	2	2.7		3	3.4		22	3.0
	3	3.4		4	3.1		23	2.8
	4	3.1		5	3.2		24	1.8
	5	3.2		6	3.2		27	2.3
	6	3.2		7	3.1		28	2.5
	7	3.1		8	1.7		29	2.9
	8	1.7		12	2.3		32	1.1
	12	2.3		15	3.2		34	0
	15	3.2		17	2.5		35	2.0
	17	2.5		18	2.5		37	0.5
	18	2.5		21	1.5		39	1.0
	21	1.5		24	0.5		41	1.0
	24	0.5		25	0.5		42	3.1
	25	0.5		26	0	Q3001	B	2.6
	26	0		27	2.5		E	3.2
	27	2.5		30	2.6	Q3002	B	1.8
	30	2.6	IC3004	1	1.8		E	2.4
IC3002	1	2.1		2	1.8	Q3003	B	1.8
	2	2.7		3	2.0		E	2.5
	3	3.4		4	1.8	Q3004	B	0.5
	4	3.1		5	1.3		E	1.2
	5	3.2		6	1.6	Q3005	B	1.0
	6	3.2		7	0		E	1.7
	7	3.1		8	0.7	Q3006	B	1.0
	8	1.7		9	0.5		E	1.7
	12	2.3		10	1.7	Q3015	B	2.0
	15	3.2		11	3.2		E	1.7
	17	2.5		12	2.9	Q3020	B	2.8
	18	2.5		13	3.0		E	2.2
	21	1.5		14	3.0			
	24	0.5		15	2.9			
	25	0.5		16	1.8			
	26	0		17	0.5			
	27	2.5		18	1.7			
	30	2.6		19	3.2			
IC3003	1	2.1		20	2.9			

KL-37W2/37W2K RM-838
KL-50W2/50W2K/50W2U RM-838

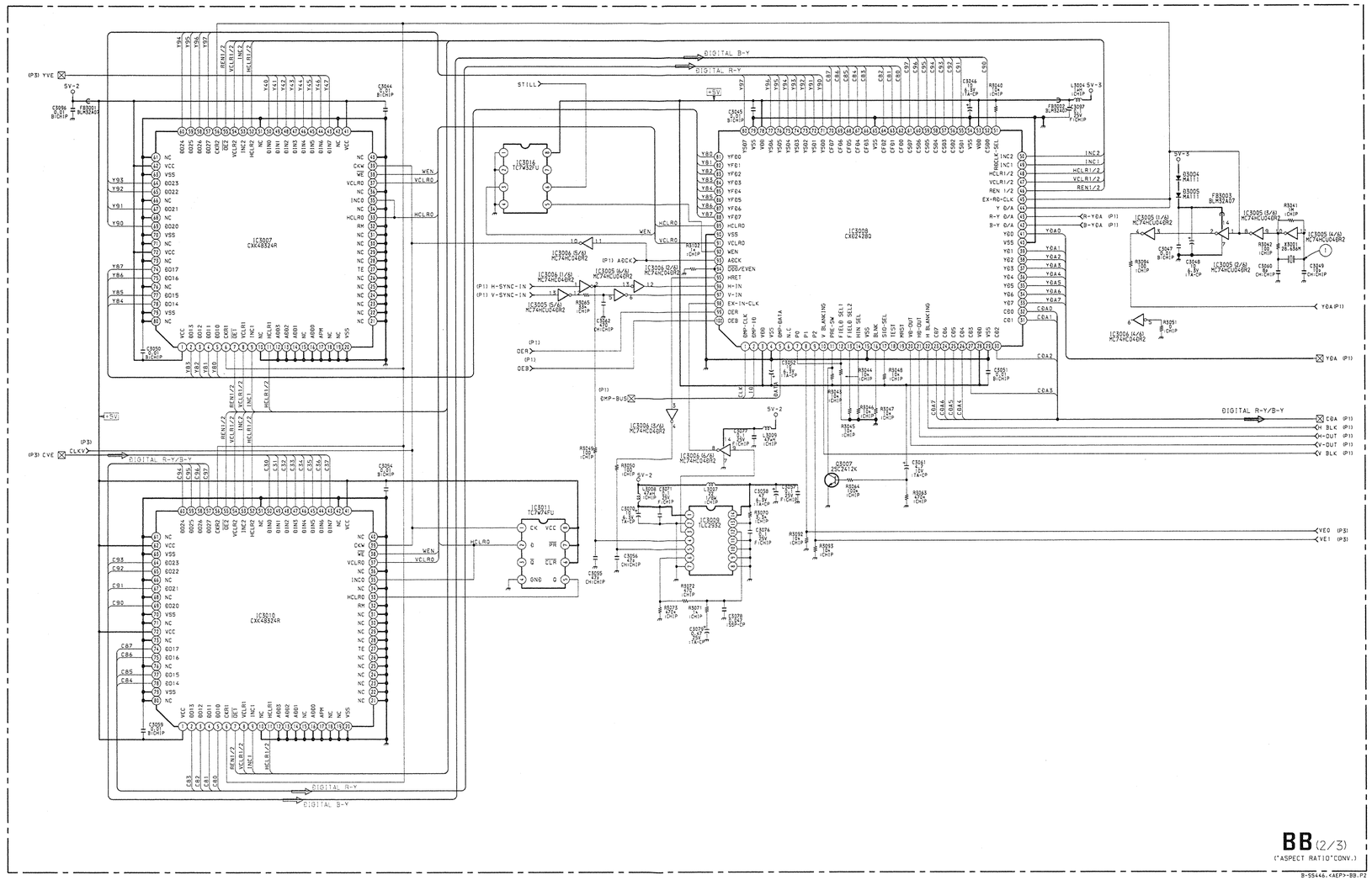

• BB (2/3) BOARD WAVEFORMS

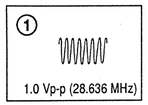

• BB (2/3) BOARD VOLTAGE LIST

Ref.	Pin No.	Voltage [V]	Ref.	Pin No.	Voltage [V]	Ref.	Pin No.	Voltage [V]
IC3005	1	2.2		2	4.9		86	0
	2	2.4		5	0.2		87	0.9
	3	2.4		7	4.8		88	0.5
	4	2.3		8	0		89	0
	5	0.3		9	0		91	0
	6	4.8		10	0.7		92	1.0
	7	0		11	4.9		93	2.3
	8	2.2		12	4.9		95	0
	9	2.2		13	0		96	2.4
	10	2.2		14	0		97	4.8
	11	2.2		16	0		98	2.3
	12	0.3		17	4.3		99	2.6
	13	3.2		20	4.8		100	2.6
	14	4.9		21	4.5			
IC3006	1	1.6		22	0.9	IC3009	3	2.4
	2	2.5		23	0		4	2.5
	3	2.5		24	2.9		5	2.5
	4	2.5		25	3.1		6	2.2
	5	0		26	3.1		12	2.2
	6	4.9		27	3.0		13	0
	7	0		30	3.2			
	8	2.3		31	2.7	IC3010	2	1.9
	9	0		32	0.4		3	0
	10	2.2		33	0.7		4	1.7
	11	2.2		34	1.2		5	0.1
	12	2.5		35	1.4		6	2.2
	13	2.5		36	2.6		7	0
	14	4.9		37	1.6		8	0
IC3007	2	1.9		38	2.8		9	0
	3	0		39	0		11	0
	4	1.7		41	2.0		12	0
	5	0.1		42	2.5		13	0
	6	2.2		43	2.4		14	0
	7	0		44	2.2		16	0
	8	0		45	2.2		17	0
	9	0		46	0'		20	0
	11	0		47	0		32	0
	33	1.0		48	0		33	1.0
	35	0		49	0		35	0
	37	0		50	0		37	0
	38	1.6		51	4.9		38	1.6
	39	0		52	0		39	0
	43	3.4		55	0		43	3.4
	44	0		56	2.0		44	0
	45	0		57	1.9		45	0
	46	0		58	0		46	0
	47	0		59	1.9		47	0
	48	0		50	1.8		48	0
	49	0		61	1.0		49	0
	50	0		62	0		50	0
	52	0		63	0.6		52	0
	53	0		64	2.1		53	0
	54	1.3		66	1.8		54	1.3
	55	2.2		67	1.9		55	2.2
	56	1.1		68	1.9		56	1.1
	57	1.7		69	1.8		57	1.7
	58	0		70	1.0		58	0
	59	1.8		71	1.4		59	1.8
	60	0.1		72	1.4		60	0.1
	64	2.1		73	1.7		64	2.1
	65	2.3		74	1.5		65	2.3
	67	1.6		75	1.3		67	1.6
	69	0		76	1.0		69	0
	74	1.3		77	1.0		74	1.3
	75	1.7		80	0.6		75	1.7
	77	1.9		81	1.3		77	1.9
	78	1.8		82	1.4		78	1.8
				83	1.7			
				84	1.5	Q3007	B	0
IC3008	1	4.9		85	1.3		C	4.9

Schematic diagram
← BB (2/3) board

Schematic diagram
BB (3/3) board →

(12) Schematic Diagram of BB (3/3) Board

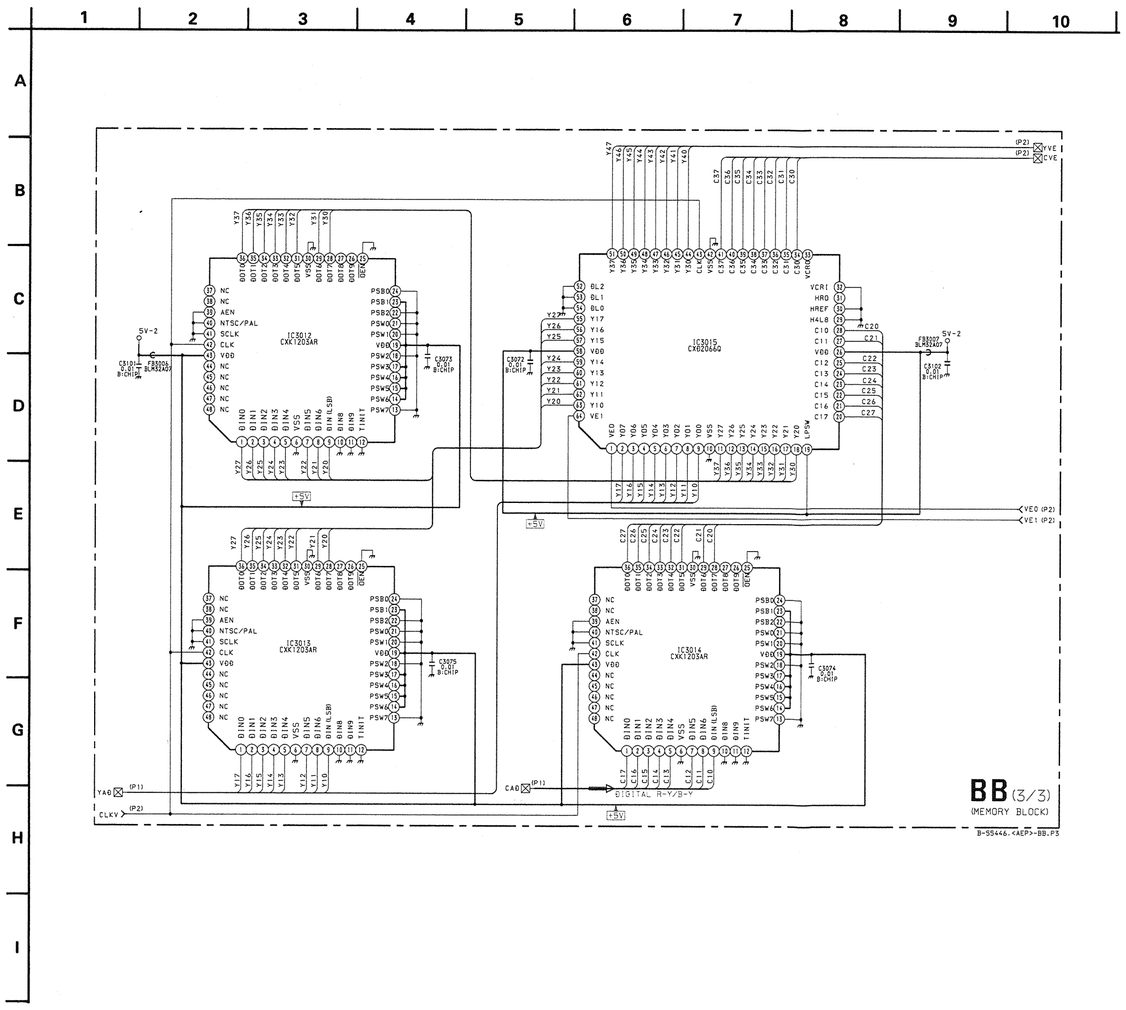

• BB (3/3) BOARD VOLTAGE LIST

Ref.	Pin No.	Voltage [V]	Ref.	Pin No.	Voltage [V]	Ref.	Pin No.	Voltage [V]
IC3012	1	1.7	IC3014	1	1.7		21	3.1
	2	3.0		2	3.0		22	3.3
	3	3.2		3	3.2		23	*
	4	3.2		4	3.2		24	3.2
	5	3.1		5	3.1		25	3.6
	7	3.0		7	3.6		27	3.0
	8	2.8		8	2.8		28	2.4
	9	2.9		9	2.9		34	2.5
	28	2.4		28	2.4		35	2.9
	29	3.0		29	3.0		36	3.6
	31	3.6		31	3.6		37	3.1
	32	3.2		32	3.2		38	3.3
	33	3.3		33	3.3		39	3.3
	34	3.3		34	3.3		40	3.0
	35	3.1		35	3.1		41	1.6
	36	1.6		36	1.6		43	2.3
	42	2.3		42	2.3		44	2.1
IC3013	1	1.7	IC3015	1	0		45	2.2
	2	3.0		2	0.8		46	2.4
	3	3.2		3	1.5		47	2.2
	4	3.2		4	1.6		48	1.5
	5	3.1		5	1.5		49	1.6
	7	3.6		6	2.3		50	1.4
	8	2.8		7	2.4		51	0.8
	9	2.9		8	2.2		55	0.8
	28	2.4		9	2.0		56	0
	29	3.0		11	0.8		57	1.6
	31	3.6		12	1.4		59	*
	32	3.2		13	1.6		60	2.3
	33	3.3		14	1.5		61	2.5
	34	3.3		25	2.3		62	*
	35	3.1		16	2.4		63	2.1
	36	1.6		17	2.3		64	0
	42	2.3		20	1.6			

KL-37W2/37W2K RM-838
KL-50W2/50W2K/50W2U RM-838

4-5. SEMICONDUCTORS

BA4558F
BA7046F
CXA1315M
CXA1875AM-T4
CXD1176Q
CXD1176Q-T4
CXK1203AR
LM2901M
MB3793-42PNF
MC14046BF
MC14046BF-T2
MC74F02M-T2
MC74HCU04DR2
MC74HC04ADR2
MC74HC4053DNR2
NJM2233BM
NJM2284M
NJM2901M-T2
TC7W32FU
TC7W74FU
TLC2932IPW
µPC358GR-E1
µPC4082G2

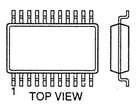
TOP VIEW

CXA1815S

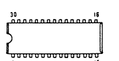
(Top view)

CXA1819Q
CXD1178Q
CXD1178Q-T6
CXD2309Q-T6

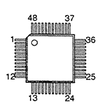

CXA1839Q-T6
CXA1860Q-T4
CXA2011Q
CXD2030R
CXD2031R-65846GJ015
CXD2031R-65846GJ0153EN
CXD2300Q-T4
CXK48324R
CXK48324R-1
TDA6812-2MGEG

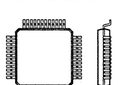
TOP VIEW

CXA1840S
CXA1855S
SDA9086-5
ST24C16CB1
ST24C16FB6
TDA7317
TDA8443B
TDA9820
TEA2114

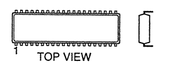
TOP VIEW

CXD2412AQ
CXD2032Q-TL
CXD2428Q

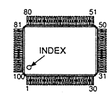

CXD2066Q
SAA7283GP

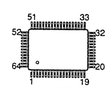
TOP VIEW

MB81C4256A-70PSZG

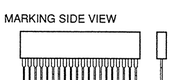

MC78L05ACPRP
NJM78L05A

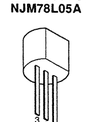

MC7809CT
NJM78M05FA
NJM78M09FA

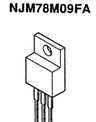

PQ05RF21
PQ09RA1
PQ09RF11
PQ15RF16
PQ30RV11

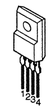

SDA30C164-GEG
SDA5273P-C26-GEG

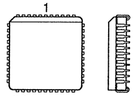
TOP VIEW

TC4S66F

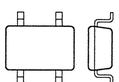

TDA2009A

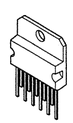

TDA2822M
TOP210PF1

(Top view)

TDA8395T/N3

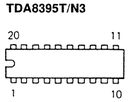

(Top view)

TL431CLP
TL431CLP-Z20

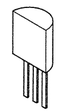

TMS27PC020-15FMLLE101

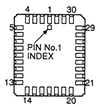

DTA114EKA-T146
DTA124EKA-T146
DTC114EK
DTC114EKA-T146
DTC124EKA-T146
DTC144EKA-T146
DTC314TKH04
DTC314TK-T-146
2SA1037K-T-146-R
2SA1162-G
2SC-1623-L5L6
2SC2412K-QR
2SC2412K-T-146-QR

DTC114ESA-TP
JC501-Q-AMMO
JC501TP-Q
2SA933AS-QRT
2SA933AS-RT
2SC2785-HFE

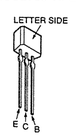

XN4401
XN4401-TX

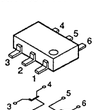

XN4601
XN4601-TX

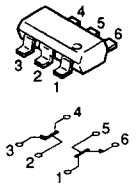

2SA1282ATP-EF

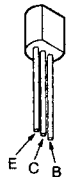

2SC4833-M1

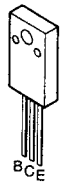

2SD2396H

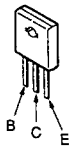

DAN202K
DAN202K-T-146
MA152WK-TX
STZ6.8T
1SS184

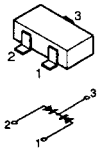

DAP202K
DAP202K-T-146

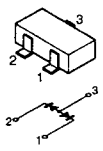

DA204K
DA204K-T-146

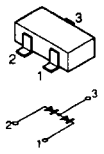

D1NL20-TR
EGP10D
EGP10DPKG23
S2LA20F
1SS133T-77

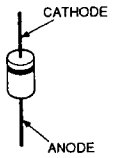

D2SBA60F

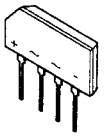

D4SB60L
D4SB60L-F
D10SBS4
D10SBS4F
RBA-406B

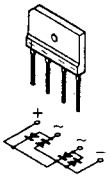

EL1Z
MTZJ-T-77-9.1A
RGP10GPKG23

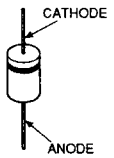

HVU359TRF
MA111
MA111-TX
RD4.7SB
RD4.7SB-T2
RD6.2SB
RD6.2SB-T2
1SV214
1SV214-TPH3
1T363
1T363-04-T8A

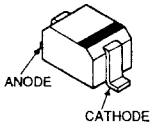

MA3030-H (TX)

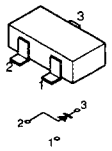

MA729
MA729-TX

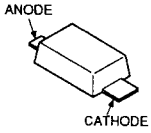

MTZJ-T-77-13B
MTZJ-T-77-15B
MTZJ-T-77-33C
MTZJ-T-77-5.6B
MTZJ-13B
MTZJ-33C
RD15ES-B2
RD30ESB3
RD5.6ESB2
1SS119-25
1SS119-25TD

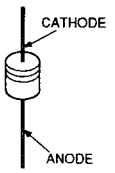

UF4005PKG23

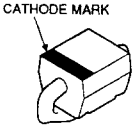

SPR-54MVW

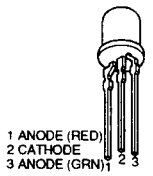

TLR124

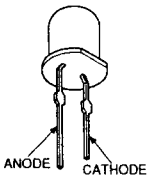

5-1. CHASSIS [KL-37W2/37W2K]

● 7-685-648-79 +BVTP 3 X 12

■ 7-685-663-79 +BVTP 4 X 16

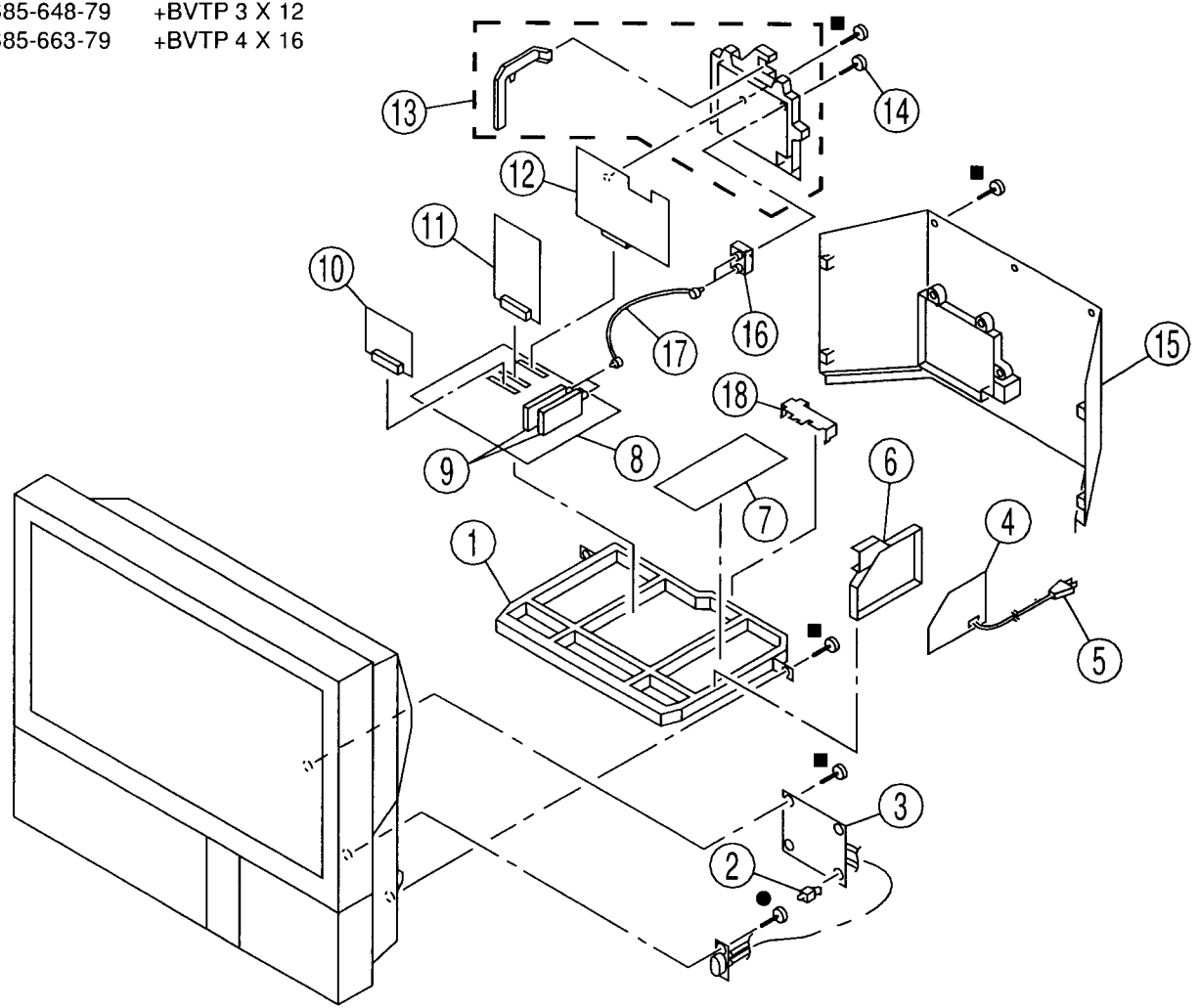

5-2. FRONT COVER [KL-37W2/37W2K]

● 7-685-648-79 +BVTP 3 X 12
■ 7-685-663-79 +BVTP 4 X 16
□ 7-683-421-04 HEXAGON SOCKET BOLT 4 X 12

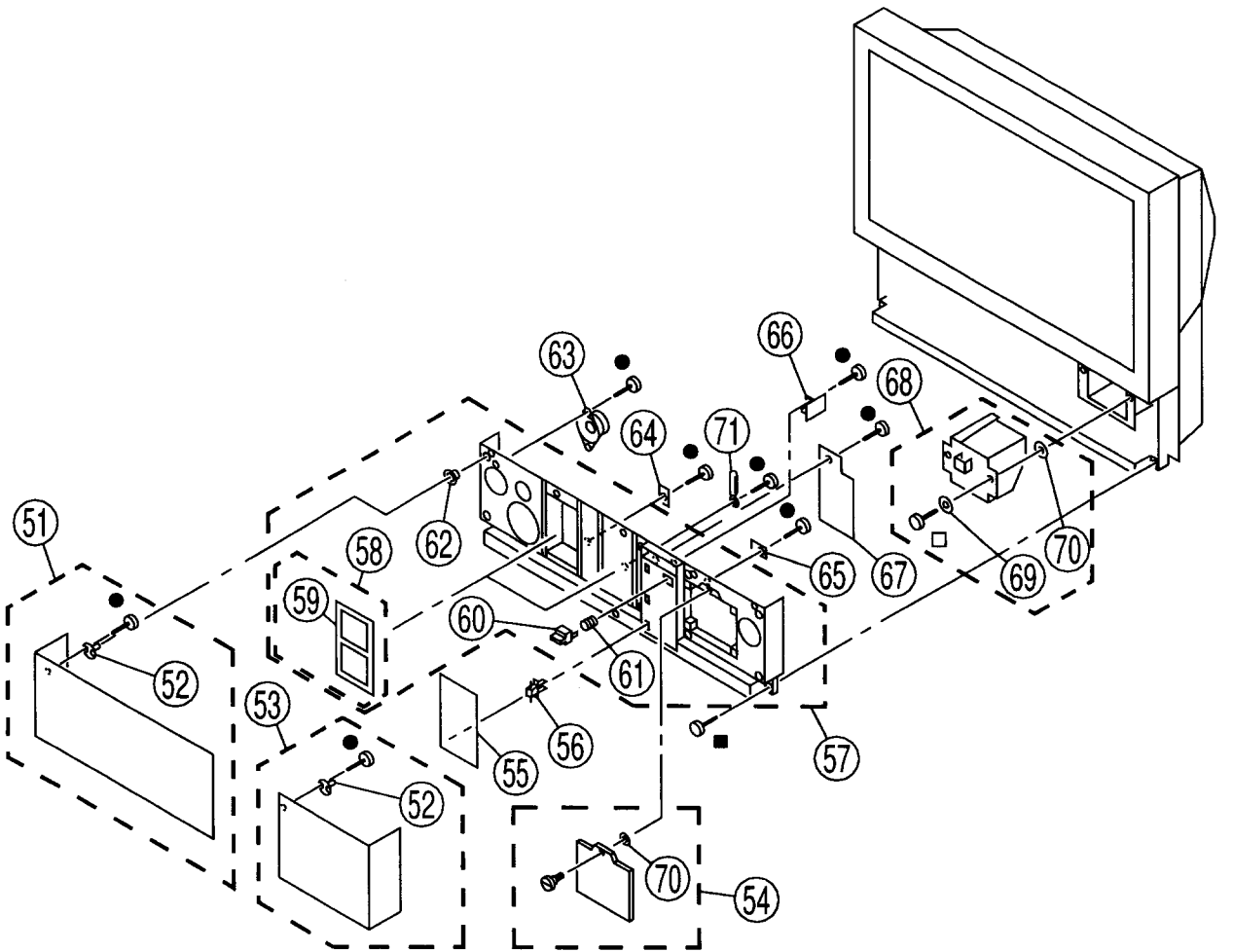

5-3. SCREEN MIRROR BLOCK AND OPTICS UNIT [KL-37W2/37W2K]

The components identified by shading and mark ⚠ are critical for safety. Replace only with part number specified.

● 7-685-648-79 +BVTP 3 X 12
■ 7-685-663-79 +BVTP 4 X 16
△ 7-685-663-71 +BVTP 4 X 16
◇ 7-685-167-19 WASHER HEAD SCREW +P 4 X 35

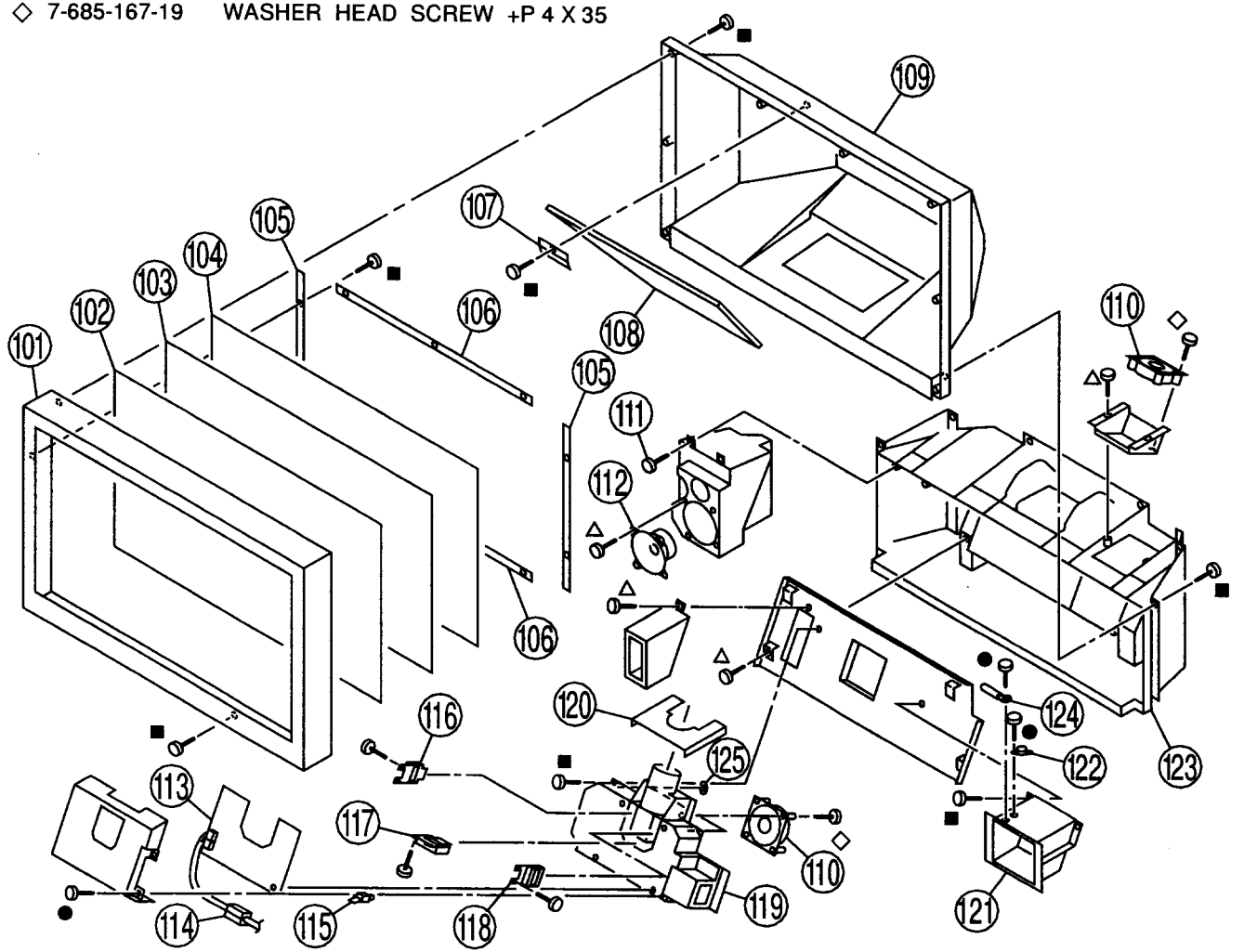

5-4. CHASSIS [KL-50W2/50W2K/50W2U]

● 7-685-648-79 +BVTP 3 X 12
■ 7-685-663-79 +BVTP 4 X 16

The components identified by shading and mark ⚠ are critical for safety. Replace only with part number specified.

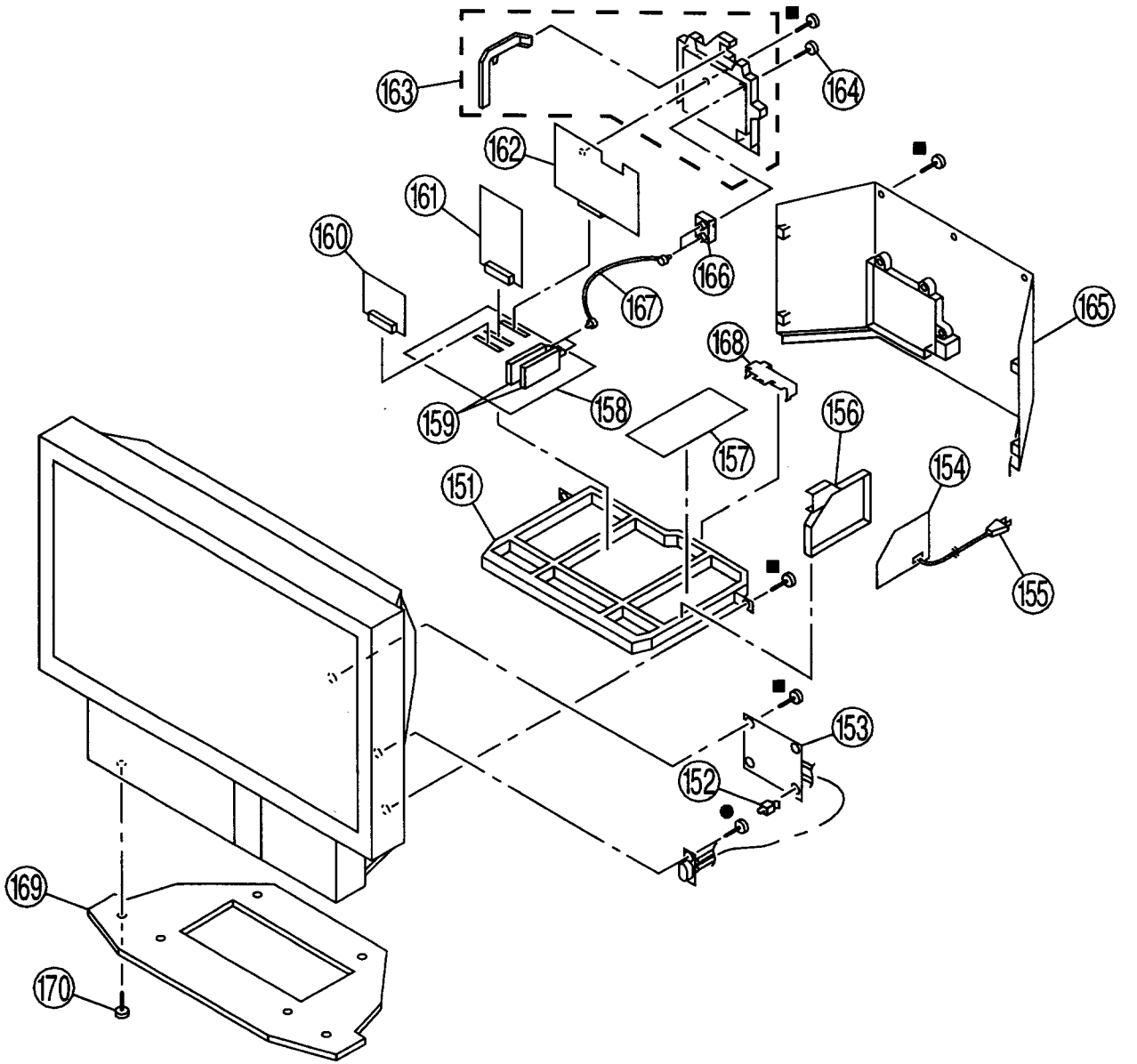

5-5. FRONT COVER [KL-50W2/50W2K/50W2U]

● 7-685-648-79 +BVTP 3 X 12
■ 7-685-663-79 +BVTP 4 X 16
□ 7-683-421-04 HEXAGON SOCKET BOLT 4 X 12

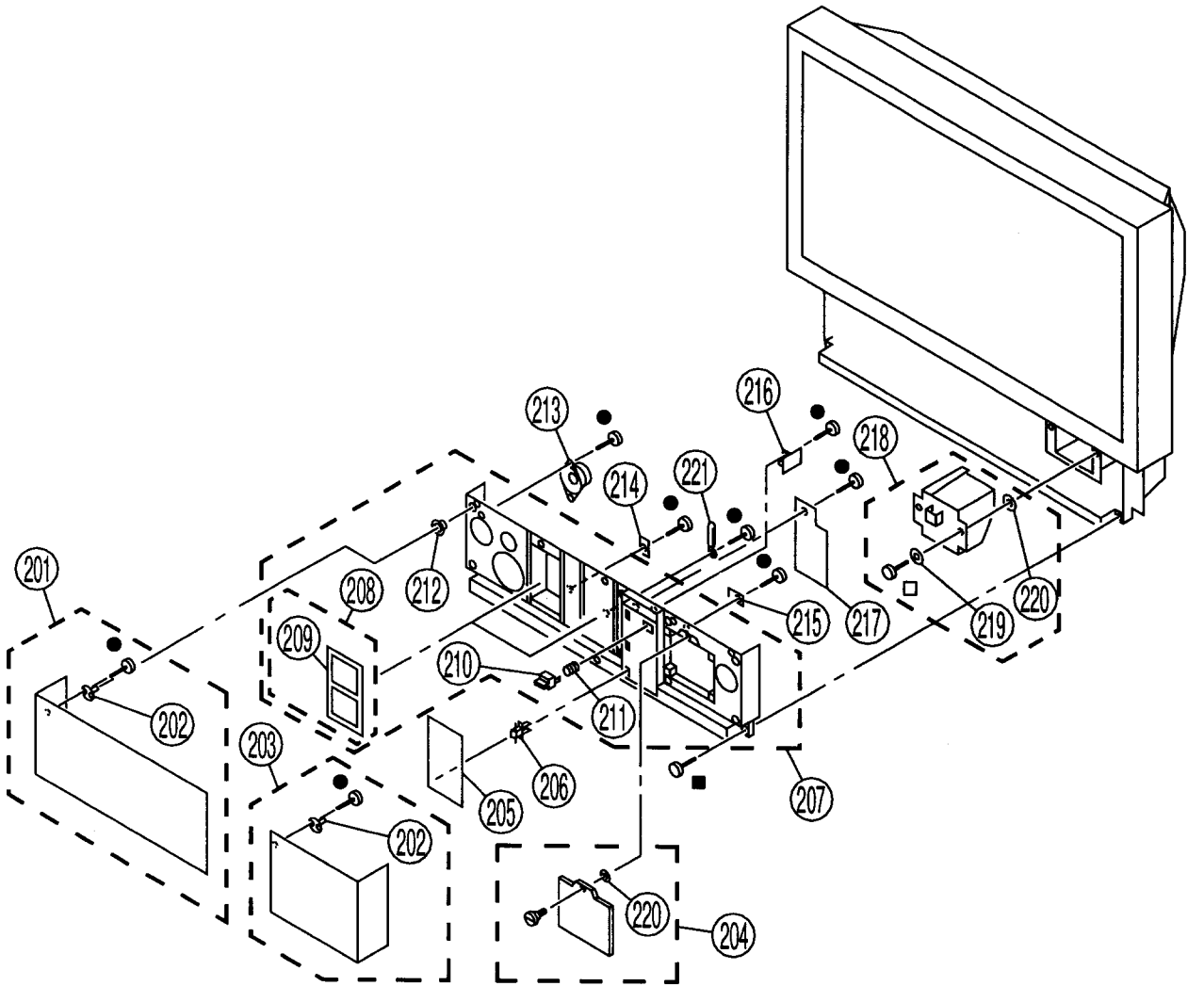

5-6. SCREEN MIRROR BLOCK AND OPTICS UNIT [KL-50W2/50W2K/50W2U]

The components identified by shading and mark ⚠ are critical for safety. Replace only with part number specified.
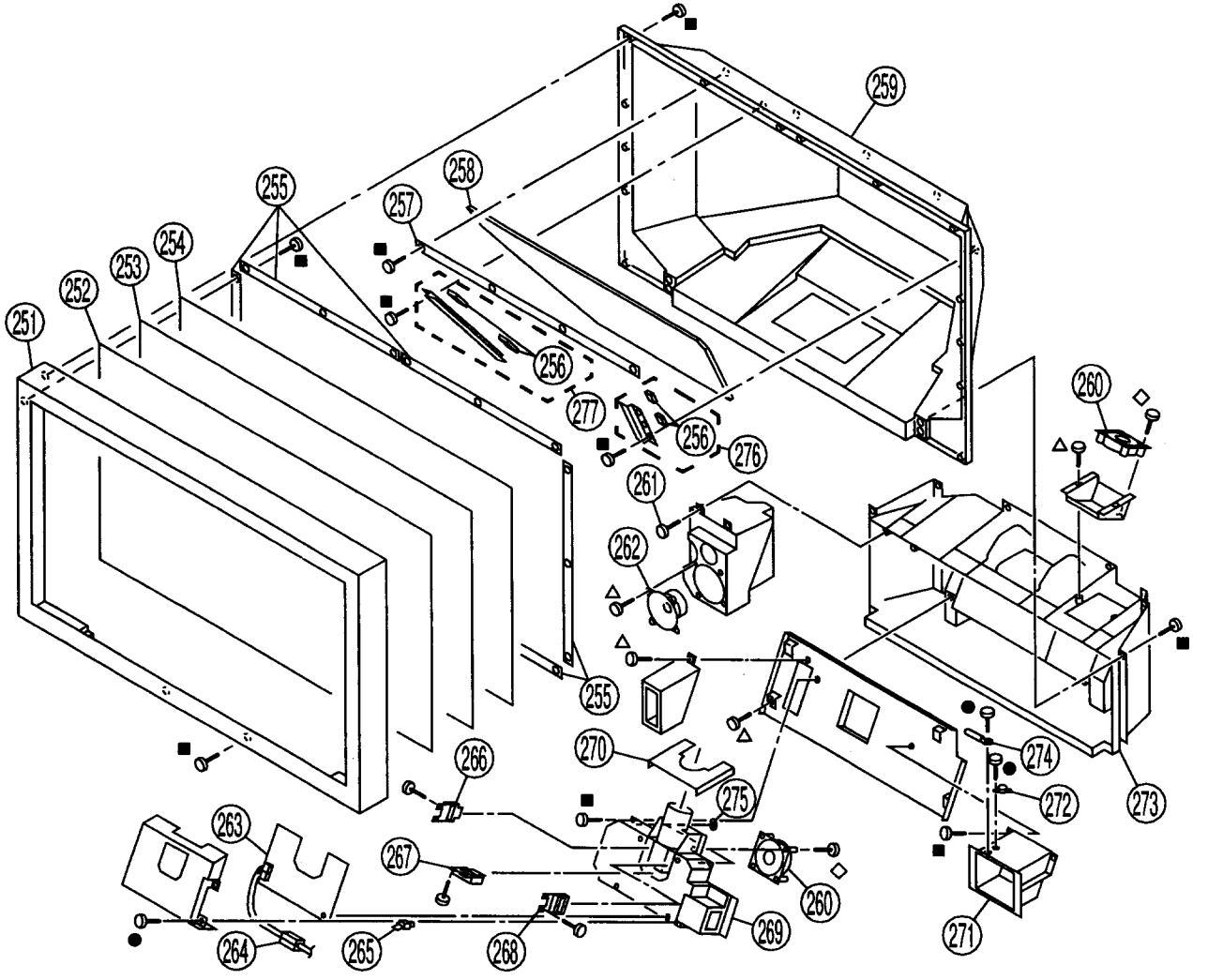
● 7-685-648-79 +BVTP 3 X 12
■ 7-685-663-79 +BVTP 4 X 16
△ 7-685-663-71 +BVTP 4 X 16
◇ 7-685-167-19 WASHER HEAD SCREW +P 4 X 35