SERVICE MANUAL RG-2 CHASSIS

MODEL	COMMANDER	DEST.	CHASSIS NO.
KP-EF41HK2	RM-871	HK	SCC-N71E-A
KP-EF41ME2	RM-871	ME	SCC-N72E-A
KP-EF41MN2	RM-871	GE	SCC-N69E-A
KP-EF41SN2	RM-871	AUS	SCC-N73E-A
KP-EF48HK2	RM-871	HK	SCC-N71C-A
KP-EF48ME2	RM-871	ME	SCC-N72C-A
KP-EF48MN2	RM-871	GE	SCC-N69C-A
KP-EF48SN2	RM-871	AUS	SCC-N73C-A

MODEL	COMMANDER	DEST.	CHASSIS NO.
KP-EF53HK2	RM-871	HK	SCC-N71B-A
KP-EF53HK2	RM-871	ME	SCC-N72B-A
KP-EF53MN2	RM-871	GE	SCC-N69B-A
KP-EF53SN2	RM-871	AUS	SCC-N73B-A

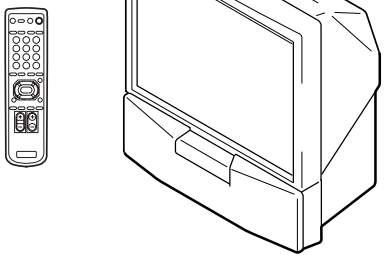

KP-EF41HK2/EF41ME2/
EF41MN2/EF41SN2

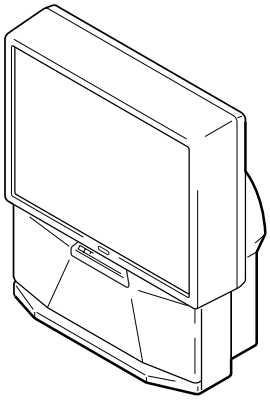

KP-EF48HK2/EF48ME2/
EF48MN2/EF48SN2

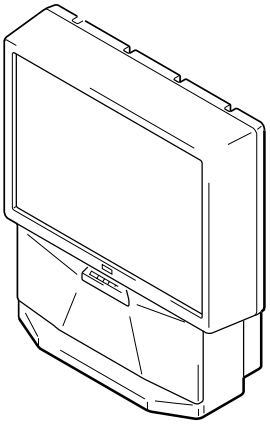

KP-EF53HK2/EF53ME2/
EF53MN2/EF53SN2

MICROFILM

* Please file according to model size. ... □

41 | 48 | 53

PROJECTION TV

SONY®

SPECIFICATIONS

Projection system
3 picture tubes, 3 lenses, horizontal in-line system

Picture tube 7 inch high-brightness monochrome tubes (6.3 raster size), with optical coupling and liquidcooling system

Projection lenses High performance, large-diameter hybrid lens F1.0

Screen size 41 inches (KP-EF41)
48 inches (KP-EF48)
53 inches (KP-EF53)

Television system
B/G, I, D/K, M

Color system PAL, PAL 60, SECAM, NTSC4.43, NTSC3.58

Channel coverage

B/G
VHF: E2 to E12
UHF: E21 to E69
CATV: S01 to S03, S1 to S41

I
UHF: B21 to B68
CATV: S01 to S03, S1 to S41

D/K
VHF: C1 to C12, R1 to R12
UHF: C13 to C57, R21 to R60
CATV: Z1 to Z39, S01 to S03, S1 to S41

M
VHF: A2 to A13
UHF: A14 to A79
CATV: A-8 to A-2, A to W+4, W+6 to W+84

Stereo system NICAM stereo B/G, I, D/K
A2 stereo (German) B/G

Antenna 75 ohm external antenna terminal

Audio output (Speaker)
15 W × 2

Number of terminals

Video Input: 4, Output: 1
phono jacks, 1 Vp-p, 75 ohms

Audio Input: 5, Output: 1, VARIABLE output: 1, phono jacks, 500 mVrms

S video Input: 2,
Y: 1 Vp-p, 75 ohms, unbalanced, sync negative,
C: 0.286 Vp-p, 75 ohms

Component video
Input: 1, phono jacks
Y: 1.0 Vp-p, 75 ohms, sync negative
C_B/B-Y: 0.7 Vp-p, 75 ohms
C_R/R-Y: 0.7 Vp-p, 75 ohms
Audio: 500 mVrms

Headphone Output: 1, minijack

Power requirement
110 – 240 V AC, 50/60 Hz

Power consumption
160 W

Dimensions (w/h/d)
948 × 992 × 511 mm (KP-EF41)
1106 × 1336 × 558 mm (KP-EF48)
1218 × 1413 × 602 mm (KP-EF53)

Mass Approx. 43 kg (KP-EF41)
Approx. 66 kg (KP-EF48)
Approx. 70 kg (KP-EF53)

Supplied accessories
Remote commander RM-871 (1)
Size R6 (AA) battery (2)

Optional accessory
AV rack SU-EF41 (KP-EF41),
SU-EF4853 (KP-EF48/EF53)

Design and specifications are subject to change without

CAUTION

SHORT CIRCUIT THE ANODE OF HTE PICTURE TUBE AND THE ANODE CAP TO THE METAL CHASSIS, CRT SHIELD, OR CARBON PAINTED ON THE CRT, AFTER REMOVING THE ANODE.

SAFETY-RELATED COMPONENT WARNING!!

COMPONENTS IDENTIFIED BY SHADING AND MARK ⚠ ON THE SCHEMATIC DIAGRAMS, EXPLODED VIEWS AND IN THE PARTS LIST ARE CRITICAL TO SAFE OPERATION. REPLACE THESE COMPONENTS WITH SONY PARTS WHOSE PART NUMBERS APPEAR AS SHOWN IN THIS MANUAL OR IN SUPPLEMENTS PUBLISHED BY SONY.

TABLE OF CONTENTS

Section	Title	Page
1.	**GENERAL**	4
2.	**DISASSEMBLY**	
2-1.	Rear Board Removal	19
2-2.	Main Bracket Section Removal	20
2-3.	Service Position	21
2-4.	H1 Board, H2 Board and Resistor (High Voltage) Removal	22
2-5.	Beznet Section Removal	24
2-6.	G Board Removal	26
2-7.	P1 Board and V2 Board Removal	26
2-8.	UG Board, AG Board and S Board Removal	26
2-9.	High-Voltage Cable Installation and Removal	27
2-10.	Mechasel Assy Removal	27
2-11.	Chassis Block Removal	28
(1)	H1, H2 Boards and Resistor Removal	28
(2)	Main Bracket Removal	29
(3)	Chassis Block Removal	30
3.	**SET-UP ADJUSTMENTS**	
3-1.	Screen Voltage Adjustment (Rough Alignment)	31
3-2.	Focus Adjustment	31
3-3.	Screen (G2) Adjustment	31
3-4.	Deflection Yoke Tilt Adjustment	31
3-5.	2-Pole Magnet Adjustment	32
3-6.	4-Pole Magnet Adjustment	32
3-7.	Defocus Adjustment (Blue)	32
3-8.	Green and Red Focus Adjustment	32
3-8-1.	Green and Red Lens Focus Adjustment	32
3-8-2.	Green and Red Electrical Focus Adjustment	32
4.	**SAFETY RELATED ADJUSTMENT**	
4-1.	HV Hold Down Adjustment	33
5.	**CIRCUIT ADJUSTMENTS**	34
5-1.	Adjustments with Commander	34
5-2.	Adjustment Method	35
5-3.	Adjustment After IC1001 and IC1702 Replacement	35
5-4.	Registration (Convergence)Adjustment Method	42
5-5.	Auto Convergence Adjustment	47
5-6.	White Balance Adjustment	48
5-7.	Text Position Adjustment	48
5-8.	Picture Quality Adjustments	48
6.	**DIAGRAMS**	
6-1.	Block Diagrams	49
6-2.	Frame Schematic Diagram	59
6-3.	Circuit Boards Location	62
6-4.	Schematic Diagrams and Printed Wiring Boards	63
(1)	Schematic Diagram of AG (1/3) Board	67
(2)	Schematic Diagram of AG (2/3) Board	71
(3)	Schematic Diagrams of AG (3/3), CB, CG and CR Boards	75
(4)	Schematic Diagram of E Board	79
(5)	Schematic Diagram of D Board	89
(6)	Schematic Diagrams of P1 and V2 Boards	93
(7)	Schematic Diagrams of H1, H2, S, ZG and ZR Boards	101
(8)	Schematic Diagrams of G and UG Boards	104
6-5.	Semiconductors	109
7.	**EXPLODED VIEWS**	
7-1.	Screen and Cover Block (KP-EF41)	111
7-2.	Cabinet and Panel Block (KP-EF41)	112
7-3.	Chassis and Picture Tube Block (KP-EF41)	113
7-4.	Screen and Cover Block (KP-EF48)	114
7-5.	Cabinet and Panel Block (KP-EF48)	115
7-6.	Chassis and Picture Tube Block (KP-EF48)	116
7-7.	Screen and Cover Block (KP-EF53)	117
7-8.	Cabinet and Panel Block (KP-EF53)	118
7-9.	Chassis and Picture Tube Block (KP-EF53)	119
8.	**ELECTRICAL PARTS LIST**	120

The operating instructions mentioned here are partial abstracts from the Operating Instruction Manual. The page numbers of the Operating Instruction Manual remein as in the manual.

SECTION1
GENERAL

Getting Started

Connections

Connecting a VHF antenna or a combination VHF/UHF antenna — 75-ohm coaxial cable (round)

Attach an optional IEC antenna connector to the 75-ohm coaxial cable.
Plug the connector into the ┳ (antenna) socket at the rear of the TV.

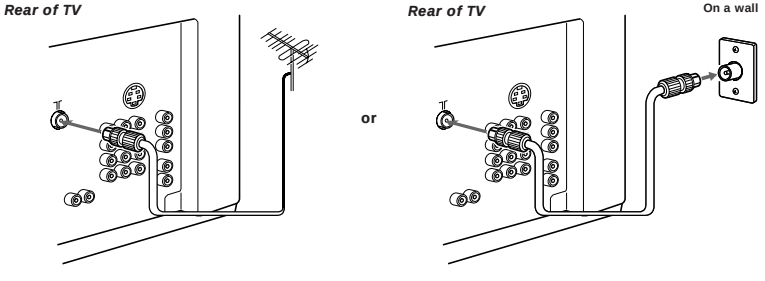

Connecting optional equipment

You can connect optional audio/video equipment to your TV such as a VCR, multi disc player, camcorder, video game or stereo system.

Connecting video equipment using video input jacks

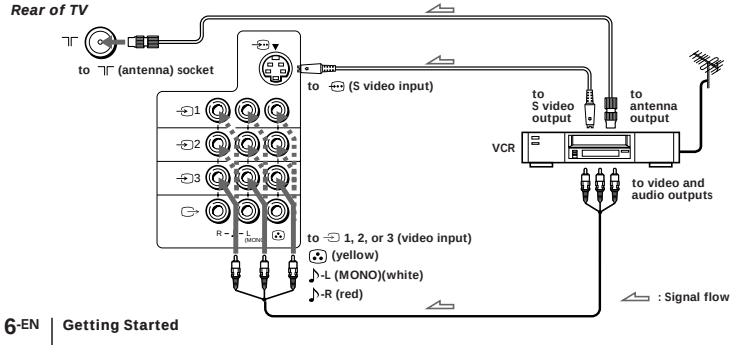

Front of TV

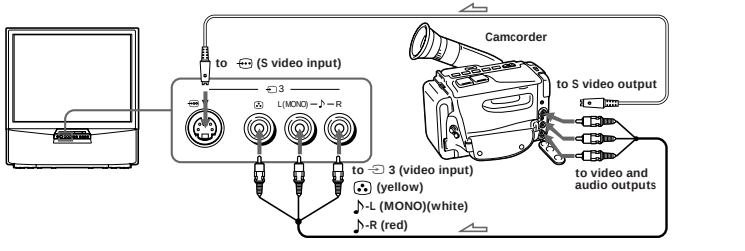

When connecting a monaural VCR
Connect the yellow plug to (video input) and the black plug to ♪-L (MONO) (audio input).

When connecting video game equipment
Connect video game equipment to the 3 (video input) jacks at the front or the rear of your TV.

When connecting a VCR to the ┳ (antenna) terminal
Preset the signal output from the VCR to the program position 0.

When connecting video equipment to the 3 (video input) jacks at the front and the rear
Do not connect video equipment to the 3 (video input) jacks at the front and the rear of your TV simultaneously; otherwise the picture will not be displayed properly on the screen.

If both S Video and video signals are input simultaneously
The S video input signal is selected. To view a video input signal, disconnect the (S video) connection.

Note on the video input
When no signal is input, the screen becomes blue.

Connecting audio/video equipment using (monitor/TV output) jacks

When the audio cable is connected to the (VARIABLE) jacks, you can adjust the volume with +/–.

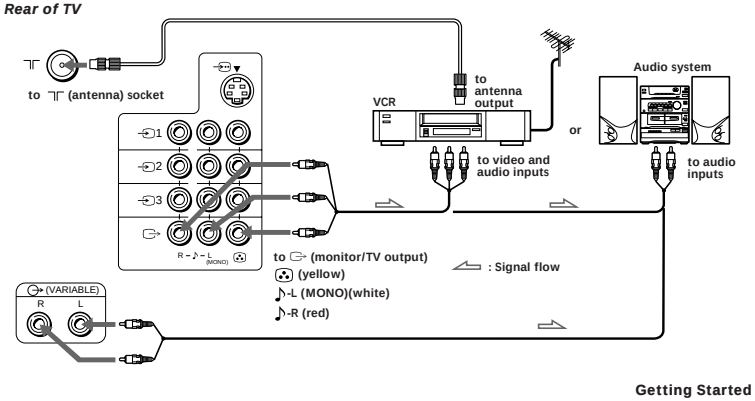

Connecting a DVD player

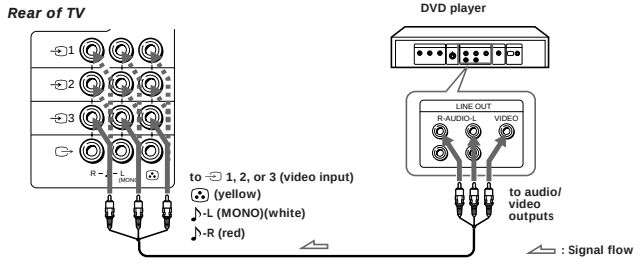

Connecting a DVD player with component video output connecors

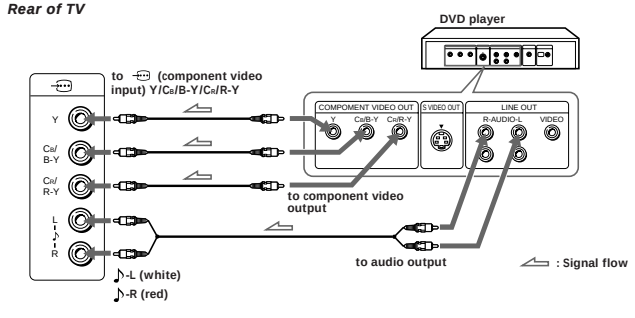

Notes

- Since the high quality pictures on a DVD disc contain a lot of information, picture noise may appear. In this case, adjust the sharpness (SHARP) in the VIDEO ADJUST menu. (See page 20.)
- Connect your DVD player directly to your TV. Connecting the DVD player through other video equipment will cause unwanted picture noise.

Connecting an amplifier with Dolby* Pro Logic decoder

Even though you use an amplifier with Dolby Pro Logic decoder instead of the projection TV's audio system, you can still use the projection TV's center speaker.

* Manufactured under license from Dolby Laboratories Licensing Corporation.
DOLBY, the double-D symbol and "PRO LOGIC" are trademarks of Dolby Laboratories Licensing Corporation.

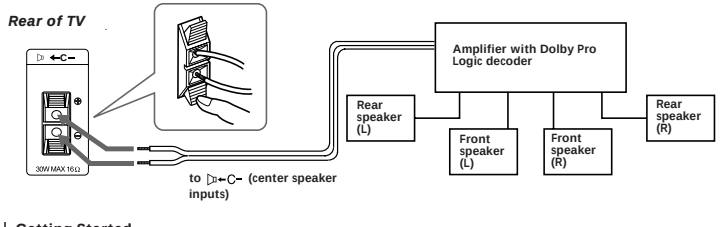

Installing the projection TV

For the best picture quality, install the projection TV within the areas shown below.

Optimum viewing area (Horizontal)

KP-EF41

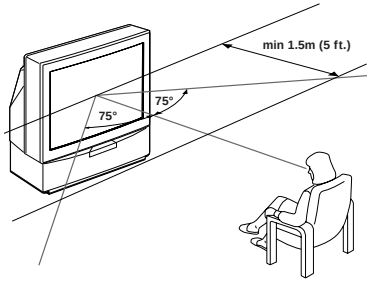

KP-EF48

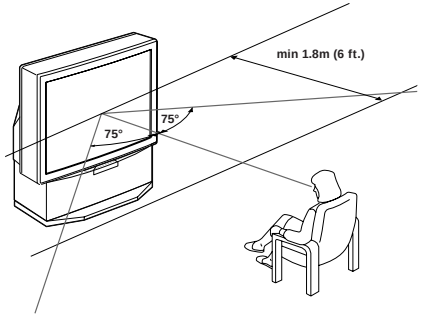

KP-EF53

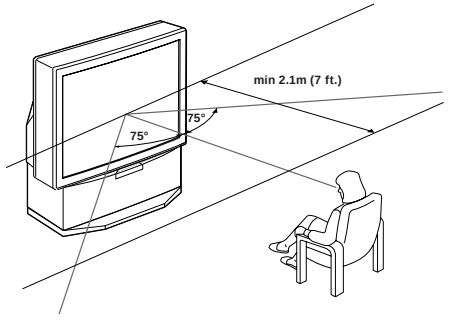

KP-EF61

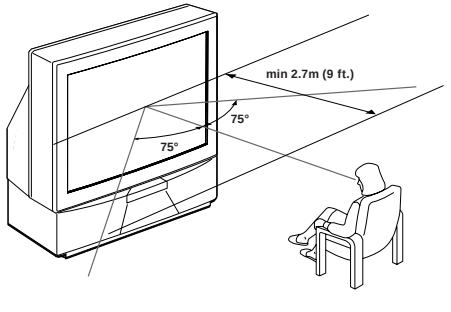

Optimum viewing area (Vertical)

KP-EF41

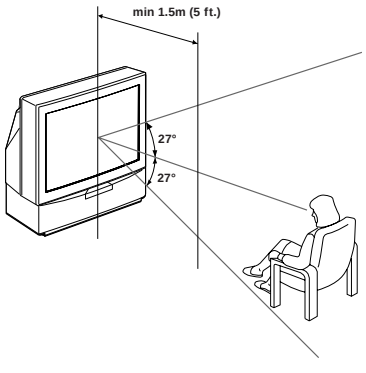

KP-EF48

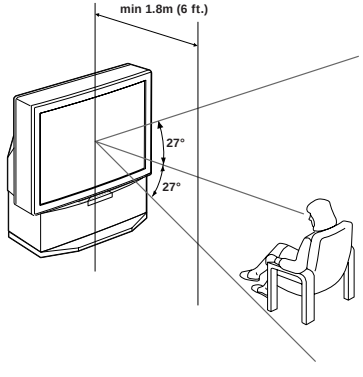

KP-EF53

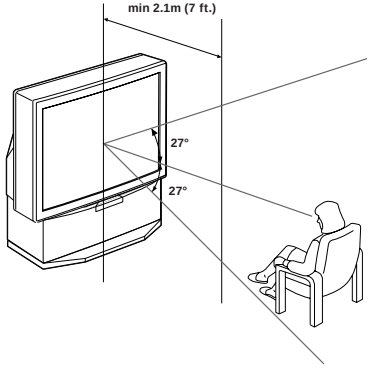

KP-EF61

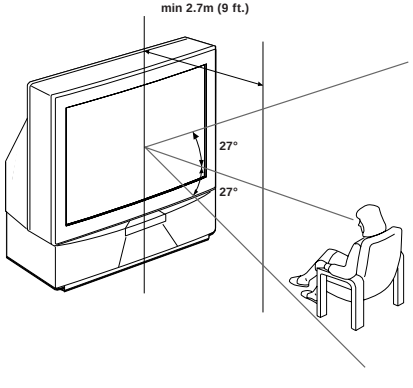

Getting to know the remote commander

Names/symbols of buttons on the remote commander are indicated in different colors to represent the available functions.

Label color	Button function
White	For general TV operations.
Green	For Teletext operations.
Yellow	For PIP and PROGRAM INDEX operations.

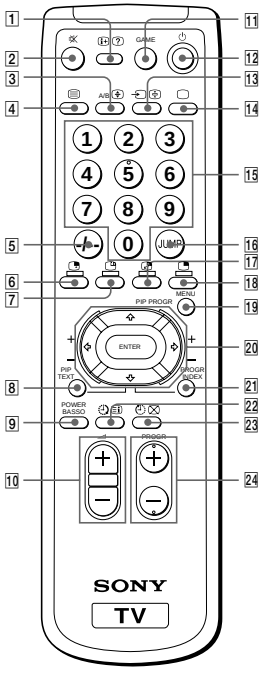

Symbol	Name	Refer to page
1	On-screen display button	19
	Teletext: Reveal button	29
2	Mute on/off button	19
3 A/B	Sound select button	24
	Teletext: Enlarge button	29
4	Teletext button	28
5 -/--	Double-digit entering button	18
6	Input select for PIP button	26
7	PIP freezing button	27
8 PIP TEXT	PIP TEXT button	30
9 POWER BASSO	POWER BASSO button	22
10 +/–	Volume control button	18
11 GAME	GAME button	31
12	TV standby button	18
13	Input mode selector	19
	Hold button	28
14	TV power on/TV mode selector	19
15 1,2,3,4,5, 6,7,8,9,0	Number buttons	18
16 JUMP	JUMP button	19
17	Swapping picture button	27
18	PIP display button	26
19 MENU	MENU button	12
20 ↑/→/↓/←	Cursor control key	12
ENTER	Enter button	12
21 PROGR INDEX	PROGR INDEX button	25
22	Wake up button (not in use for your model)	
	Teletext: INDEX button	28
23	Sleep timer button	19
	Teletext: Text clear button	29
24 PROGR +/–	Program selectors	18

Introducing the menu system

You can preset TV channels, adjust the picture and sound qualities, and select some settings using the on-screen menus. You can use the buttons on both the remote commander and the TV to operate the menus.

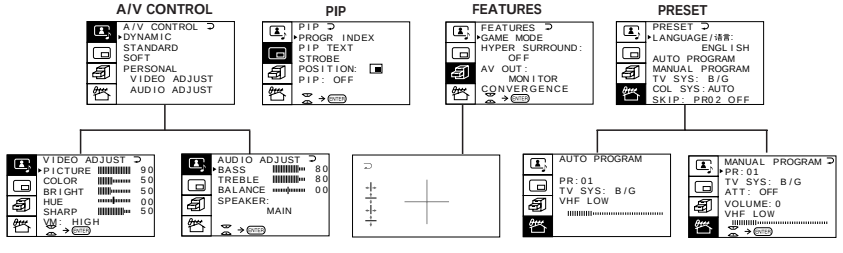

Getting back to the previous menu (except for AUTO PROGRAM)

Press ↑ or ↓ to move the cursor (▶) to the first line (↩) of each menu, and press ENTER.

Cancelling the menu screen

Press MENU.

Notes (except for AUTO PROGRAM)

- When a menu is selected after pressing ENTER, the color of both the menu and the menu symbol change and the cursor (▶) appears beside the first item of the menu.
- When an item on the menu is selected after pressing ENTER, the color of the item changes.
- You can refer to the guide (→ ENTER) at the bottom of the menus (except for the A/V CONTROL and PRESET menus) for the basic operations of the menu.
- If more than approximately 60 seconds elapse after you press a button, the menu screen disappears automatically.

Changing the menu language

If you prefer Chinese (for MN, MG, HK and SN models)/Arabic (for ME model) to English, you can change the menu language. You can use buttons on both the remote commander and the TV.

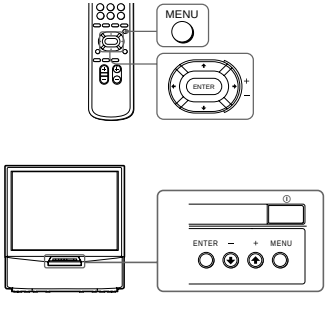

1 Press ⏻ to turn on the TV.

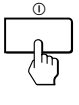

2 Press MENU.

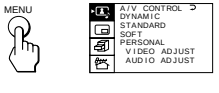

3 Press ↑ or ↓ to move the cursor (▶) to the PRESET menu (), and press ENTER.

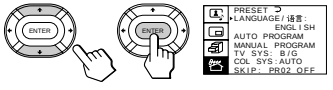

4 Make sure the cursor (▶) appears beside LANGUAGE/ 语言 (اللغة), and press ENTER.

5 Press ↑/→/↓/← to select 中文 (عربي), and press ENTER.
All of the menus change to Chinese (Arabic).

6 Press MENU to return to the normal screen.

Presetting channels

You can preset TV channels easily by storing all the receivable channels automatically. You can also preset channels manually or disable program positions (see page 16).

Presetting channels automatically

You can preset up to 100 TV channels in numerical sequence from the program position 1. You can preset channels automatically using the button on the TV or the menu.

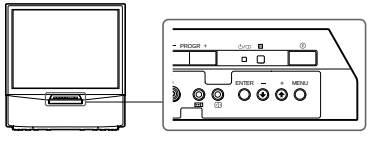

1 Press ⏻ to turn on the TV.

2 Press ▶▶| .

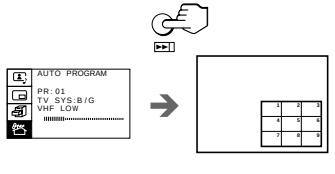

The TV starts scanning and presetting channels automatically. When all of the receivable channels are stored, the AUTO PROGRAM menu disappears and the first nine preset TV programs appear on the nine sub screens. The nine sub screens disappear after being displayed for several seconds.

Note

- If you want to return to the normal screen while the nine sub screens are being displayed, you can press PROGR INDEX on the remote commander.

To preset channels automatically using the menu

1 Press MENU.

2 Press ↑ or ↓ to move the cursor (▶) to the PRESET menu ( ), and press ENTER.

3 Press ↑ or ↓ to move the cursor (▶) to AUTO PROGRAM, and press ENTER.

Presetting channels manually

To change the program position for a channel or to receive a channel with a weak signal which you cannot receive by automatic presetting, preset the channel manually.

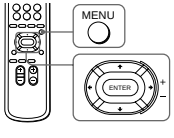

1 Press MENU.

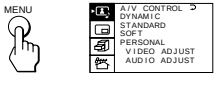

2 Press ↑ or ↓ to move the cursor (▶) to the PRESET menu ( ), and press ENTER.

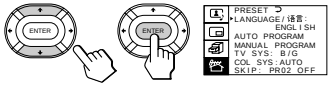

3 Select your local TV system.

(1) Press ↑ or ↓ to move the cursor (▶) to TV SYS, and press ENTER.
(2) Press ↑/→/↓/← until your local TV system appears on the menu, and press ENTER.

4 Press ↑ or ↓ to move the cursor (▶) to MANUAL PROGRAM, and press ENTER.

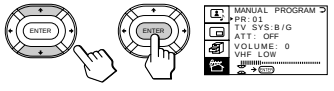

5 Select the program position to which you want to preset a channel.

(1) Make sure the cursor (▶) appears beside PR, and press ENTER.
(2) Press ↑/→/↓/← until the program position you want appears on the menu, and press ENTER.

6 Select the desired channel.

(1) Press ↑ or ↓ to move the cursor (▶) to VHF LOW (VHF Hi or UHF), and press ENTER.
(2) Press ↑/→/↓/← until the desired channel picture appears on the TV screen, and press ENTER.

7 Press MENU to return to the normal screen.

If the TV system is not properly selected

The picture color may be poor and/or the sound may be noisy. In this case, select the appropriate TV system.

1 Press PROGR +/– or the number buttons to select the program position.
2 Display the PRESET menu.
3 Press ↑ or ↓ to move the cursor (▶) to TV SYS, and press ENTER.
4 Press ↑/→/↓/← until the appropriate TV system appears, and press ENTER.

Notes

- The TV SYS (TV system), the ATT (attenuator), and the VOLUME (volume offset) settings are memorized for each program position.
- If you do not know your local TV system, consult your nearest Sony dealer or authorized service center.

Attenuating the signal for individual programs

If the TV signal is too strong, the picture may be distorted. You can reduce the picture distortion by attenuating the signal individually.

1 Display the PRESET menu.

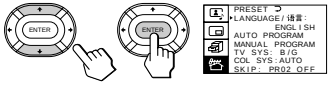

2 Press ↑ or ↓ to move the cursor (▶) to MANUAL PROGRAM, and press ENTER.

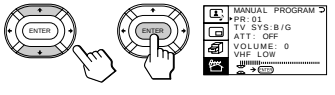

3 Press ↑ or ↓ to move the cursor (▶) to ATT, and press ENTER.

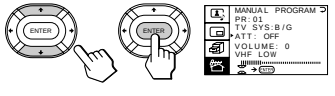

4 Press ↑/→/↓/← to select ON, and press ENTER.

Disabling program positions

By disabling unused or unwanted program positions, you can skip those positions when you press PROGR +/–.

1 Press MENU.

2 Press ↑ or ↓ to move the cursor (▶) to the PRESET menu ( ), and press ENTER.

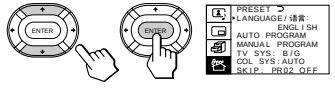

3 Press ↑ or ↓ to move the cursor (▶) to SKIP, and press ENTER.

4 Press ↑ or ↓ until the unused or unwanted program position appears on the menu, and press ENTER.

5 Press ↑/→/↓/← to select ON, and press ENTER.

6 To disable other program positions, repeat steps 4 and 5.

7 Press MENU to return to the normal screen.

To cancel the skip setting

1 Display the PRESET menu.
2 Press ↑ or ↓ to move the cursor (▶) to SKIP, and press ENTER.
3 Press ↑ or ↓ until the program position you want to cancel the skip setting appears, and press ENTER.
4 Press ↑/→/↓/← to select OFF, and press ENTER.

Presetting the volume level for individual programs

If the volume of the selected program is louder than that of other programs, set the volume level.

1 Press MENU.

2 Press ↑ or ↓ to move the cursor (▶) to the PRESET menu ( ), and press ENTER.

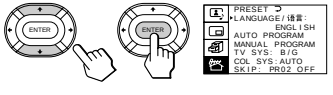

3 Press ↑ or ↓ to move the cursor (▶) to MANUAL PROGRAM, and press ENTER.

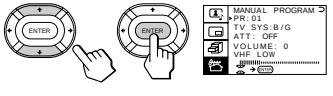

4 Press ↑ or ↓ to move the cursor (▶) to VOLUME, and press ENTER.

5 Press ↑/→/↓/← to set the level, and press ENTER.
The level can be set as 0, –1, –2, ...–6 (minimum).

Adjusting the convergence (CONVERGENCE)

Before you use the projection TV, adjust convergence. The projection tube image appears on the screen in three layers (red, green and blue). If they do not converge, the color is poor and the picture blurs. To correct this, adjust convergence.
After 20-30 minutes of turning on the power, adjust convergence.

Adjusting the convergence automatically

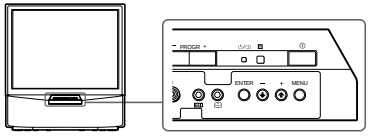

Press on the TV.
The auto convergence function works for about 30 seconds.

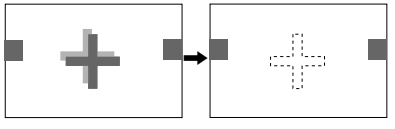

Adjusting the convergence manually

When the auto convergence function does not work correctly with , adjust convergence by selecting CONVERGENCE of the FEATURES menu.

1 Press MENU.

2 Press ↑ or ↓ to move the cursor (▶) to the FEATURES menu ( ), and press ENTER.

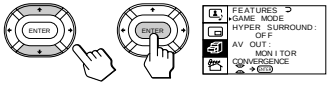

3 Press ↑ or ↓ to move the cursor (▶) to CONVERGENCE and press ENTER.
The CONVERGENCE adjustment screen appears.

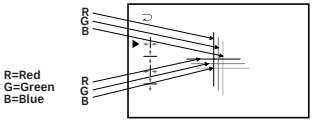

4 Press ↑ or ↓ to move the cursor (▶) to the symbol showing the line you want to adjust, and press ENTER.

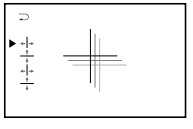

: Red vertical line (left/right adjustment)
: Red horizontal line (up/down adjustment)
: Blue vertical line (left/right adjustment)
: Blue horizontal line (up/down adjustment)

5 Press ↑ or ↓ to move the line until it converges with the center green line, and press ENTER.

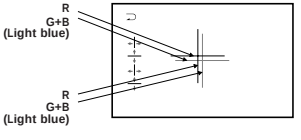

To move up/right, press ↑.
To move down/left, press ↓.

6 Repeat steps 4 and 5 to adjust the other lines until all three lines converge and are seen as a white cross.

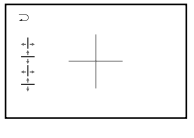

7 Press MENU to return to the normal screen.

Watching the TV

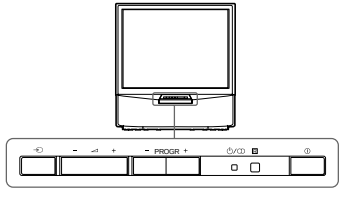

1 Press ⏻ to turn on the TV.

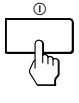

When the TV is turned on in the standby mode, the ⏻/CD indicator on the TV lights up. To turn on the TV completely, press ⏻ on the remote commander or the TV.

2 Select the TV program you want to watch.

To select a program position directly
Press the number button.

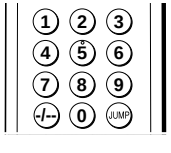

To select a two-digit program position, press "-/--" before the number buttons.
For example: to select program position 25, press "-/--," then "2" and "5."

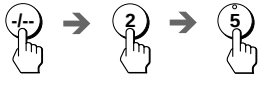

To scan through program positions
Press PROGR + /– on the remote commander or the TV until the program position you want appears.

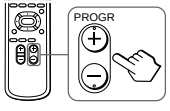

3 Press ◿ +/– on the remote commander or the TV to adjust the volume.

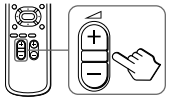

Turning off the TV

To turn off the TV temporarily
Press ⏻ on the remote commander. The ⏻/CD indicator lights up.

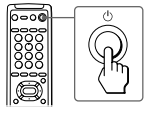

To turn off the TV completely
Press ⏻ on the TV.

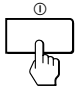

Watching the video input

Press ⮆ on the remote commander or ⮆ on the TV.

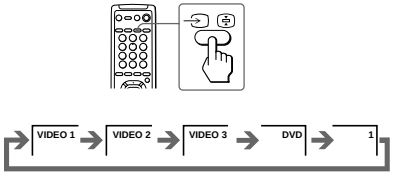

To watch TV
Press 🖵 on the remote commander or ⮆ on the TV.

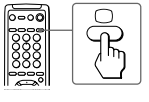

Switching back quickly to the previous channel

Press JUMP.

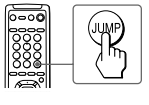

Muting the sound

Press 🔇.

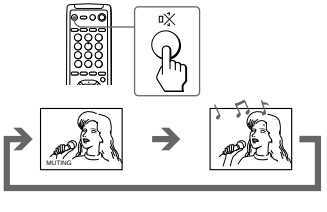

Displaying the on-screen information

Press i ?.

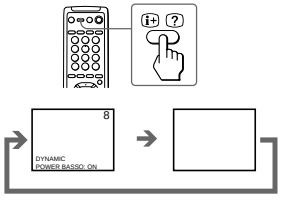

Note
- The on-screen display shows the program position or the video mode, the picture and sound information. The on-screen display for the picture and sound information disappears after being displayed for approximately three seconds.

Setting the Sleep Timer

You can set the TV to turn off automatically after the period of time you want.

Press ⏲ ⊠.

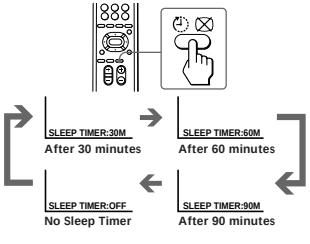

To cancel the Sleep Timer, press ⏲ ⊠ repeatedly until "SLEEP TIMER: OFF" appears, or turn the TV off.

Adjusting the picture and sound

Selecting the picture and sound modes

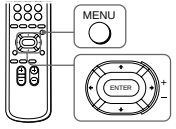

1 Press MENU.

2 Make sure the cursor (▶) appears in the A/V CONTROL menu (), and press ENTER.

3 Press ↑ or ↓ to move the cursor (▶) to DYNAMIC, STANDARD, SOFT, or PERSONAL, and press ENTER.

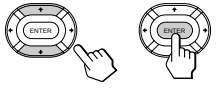

Select	To
DYNAMIC	Receive high contrast picture with powerful sound.
STANDARD	Receive normal contrast picture with medium listening sound.
SOFT	Receive mild picture with soft sound.
PERSONAL	Receive the last picture and sound settings that are adjusted using VIDEO ADJUST and AUDIO ADJUST.

4 Press MENU to return to the normal screen.

Adjusting the picture settings (VIDEO ADJUST)

You can adjust the picture settings to suit your taste with the VIDEO ADJUST option. The adjusted settings are stored in the PERSONAL option.

1 Press MENU.

2 Make sure the cursor (▶) appears in the A/V CONTROL menu (), and press ENTER.

3 Press ↑ or ↓ to move the cursor (▶) to VIDEO ADJUST, and press ENTER.

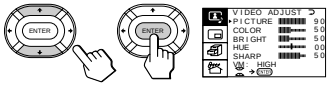

4 Press ↑ or ↓ to move the cursor (▶) to the item you want to adjust, and press ENTER.

5 Press ↑/→/↓/← to adjust the selected item, and press ENTER.

For details on each item, see "Description of adjustable items" below.

6 To adjust other items, repeat steps 4 and 5.

7 Press MENU to return to the normal screen.

Description of adjustable items

Item	Press ↑/←	Press ↑/→
PICTURE	Decrease picture contrast.	Increase picture contrast.
COLOR	Decrease color intensity.	Increase color intensity.
BRIGHT	Darken the picture.	Brighten the picture.
HUE	Make picture tones become reddish.	Make picture tones become greenish.
SHARP	Soften the picture.	Sharpen the picture.
VM	Decrease emphasis on picture edges.	Increase emphasis on picture edges.

Note
- You can adjust HUE for the NTSC color system only. (Note that you can't adjust the NTSC color system of the component inputs.)

If the picture is slightly snowy
You may try to improve the picture by changing the VM setting as described below:

1 Display the VIDEO ADJUST menu.
2 Press ↑ or ↓ to move the cursor (▶) to VM, and press ENTER.
3 Press ↑/→/↓/← to select LOW, and press ENTER.

If the picture color is abnormal when receiving programs through the 𝍐 (antenna) terminal
Change the color system or the TV system from the PRESET menu as described below until the color becomes normal.

1 Display the PRESET menu.
2 Press ↑ or ↓ to move the cursor (▶) to COL SYS or TV SYS, and press ENTER.
3 Press ↑/→/↓/← to change the color system or the TV system until the color becomes normal, and press ENTER.

Note
- Normally set the color system (COL SYS) to AUTO.

Adjusting the sound settings (AUDIO ADJUST)

You can adjust the sound settings to suit your taste with the AUDIO ADJUST option. The adjusted settings are stored in the PERSONAL option.

1 Press MENU.

2 Make sure the cursor (▶) appears in the A/V CONTROL menu (), and press ENTER.

3 Press ↑ or ↓ to move the cursor (▶) to AUDIO ADJUST, and press ENTER.

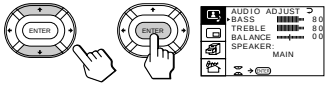

4 Press ↑ or ↓ to move the cursor (▶) to the item you want to adjust, and press ENTER.

5 Press ↑/→/↓/← to adjust the selected item, and press ENTER.

For details on each item, see "Description of adjustable items" below.

6 To adjust other items, repeat steps 4 and 5.

7 Press MENU to return to the normal screen.

Description of adjustable items

Item	Press ↑/←	Press ↑/→
BASS	Decrease the bass sound.	Increase the bass sound.
TREBLE	Decrease the treble sound.	Increase the treble sound.
BALANCE	Increase the left speaker's volume	Increase the right speaker's volume.

If the sound is distorted or noisy when receiving programs through the 𝍐 (antenna) terminal
Change the TV system from the PRESET menu as described below until the sound becomes normal.

1 Display the PRESET menu.
2 Press ↑ or ↓ to move the cursor (▶) to TV SYS, and press ENTER.
3 Press ↑/→/↓/← to change the TV system until the sound becomes normal, and press ENTER.

Setting the speaker

If you connect a Dolby Pro Logic-compatible amplifier to the center speaker terminals, you can use the projection TV speakers as center speakers.

1 Press MENU.

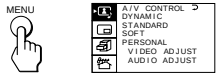

2 Make sure the cursor (▶) appears in the A/V CONTROL menu ( ), and press ENTER.

3 Press ↑ or ↓ to move the cursor (▶) to AUDIO ADJUST, and press ENTER.

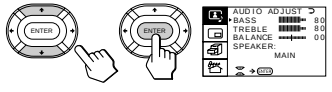

4 Press ↑ or ↓ to move the cursor (▶) to SPEAKER, and press ENTER.

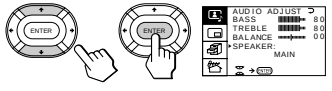

5 Press ↑/→/↓/← to set the speaker, and press ENTER.
To use the projection TV speakers as center speakers, select CENTER IN.
To listen to the sound from a projection TV, select MAIN.

6 Press MENU to return to the normal screen.

Listening with dynamic sound (POWER BASSO)

The POWER BASSO sound mode enables you to enjoy a high quality sound with the best combination of all types of sound. It reproduces dynamic and clear sounds and emphasizes low and high audio effects as well.

Press POWER BASSO.

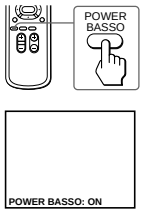

The sound mode of the TV program or the video input changes to the POWER BASSO sound.

To cancel the POWER BASSO mode
Press POWER BASSO again.

Note
- You can select any of the surround sound modes (HYPER SURROUND) to cancel the POWER BASSO sound.

Listening to the surround sound (HYPER SURROUND)

The HYPER SURROUND feature enables you to enjoy a surround sound effect that is like being in a concert hall or movie theater when receiving stereo signals.

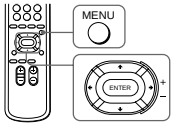

1 Press MENU.

2 Press ↑ or ↓ to move the cursor (▶) to the FEATURES menu ( ) , and press ENTER.

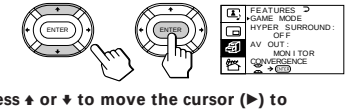

3 Press ↑ or ↓ to move the cursor (▶) to HYPER SURROUND, and press ENTER.

4 Press ↑/→/↓/← to select MOVIE, MUSIC, NEWS⟨BBE⟩, HALL⟨SRS⟩ or SPACE, and press ENTER.

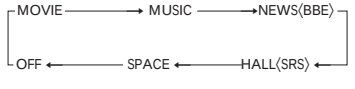

For details on each item, see "Description of adjustable items" below.

5 Press MENU to return to the normal screen.

Description of adjustable items

Select	To
MOVIE	Listen to a sound that emphasizes the bass audio effect of movie theater.
MUSIC	Listen to a dynamic and clear sound that emphasizes the low and high audio sounds.
NEWS⟨BBE⟩	Listen to a sound that emphasizes voice.
HALL⟨SRS⟩	Listen to a sound that spreads out over a large area, giving the feeling of being at a concert hall.
SPACE	Listen to a monaural sound that gives a stereo-like effect.
OFF	Turn off the surround sound.

Notes
- The BBE is manufactured by Sony Corporation under license from BBE Sound, Inc. It is covered by U.S. Patent No. 4,638,258 and No. 4,482,866. The word "BBE" and the BBE symbol are the trademarks of BBE Sound, Inc.
- The (●)® SRS (SOUND RETRIEVAL SYSTEM) is manufactured by Sony Corporation under license from SRS Labs, Inc. It is covered by U.S. Patent No. 4,748,669.
  The word "SRS" and the SRS symbol (●) are registered trademarks of SRS Labs, Inc.

Selecting a stereo or bilingual program

You can enjoy stereo sound or bilingual programs of NICAM and A2 (German) stereo systems.

Press A/B⊕ repeatedly until you receive the sound you want.
The on-screen display changes corresponding to the selected sound and the ⏻/CD indicator also lights up.

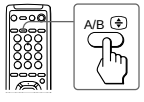

When receiving a NICAM program

Broadcasting	On-screen display (Selected sound)
NICAM stereo	NICAM (Stereo sound) → MONO (Regular sound)
NICAM bilingual	NICAM MAIN (Main sound) → NICAM SUB (Sub sound) → MONO (Regular sound)
NICAM monaural	NICAM MAIN (Main sound) → MONO (Regular sound)

When receiving an A2 (German) program

Broadcasting	On-screen display (Selected sound)
A2 (German) stereo	MONO (Regular sound) → STEREO (Stereo sound)
A2 (German) bilingual	MAIN (Main sound) → SUB (Sub sound)

Receiving area for NICAM and A2 (German) programs

System	Receiving area
NICAM	Hong Kong, Singapore, New Zealand, Malaysia, Thailand, etc.
A2 (German)	Australia, Malaysia, Thailand, etc.

Notes
- If the signal is very weak, the sound becomes monaural.
- If the stereo sound is noisy when receiving a NICAM program, select "MONO." The sound becomes monaural, but the noise is reduced.

If the sound is distorted or noisy when receiving a monaural program through the ⅄ (antenna) terminal
Press A/B⊕ repeatedly until "MONO" appears on the screen while the ⏻/CD indicator is off.

To cancel the monaural sound setting, press A/B⊕ again until "AUTO" appears on the screen.

MONO → AUTO

Notes
- The "MONO" or "AUTO" setting memorized for each program position.
- You cannot receive stereo broadcast signal when the TV is in the "MONO" setting.

Viewing multiple programs at the same time (PROGRAM INDEX)

The PROGRAM INDEX feature allows you to view all the preset TV programs and the video inputs on the nine sub screens at the same time.

You can view multiple programs on the nine sub screens using the button on the remote commander or the menu.

Press PROGR INDEX.

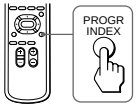

The first nine preset programs appear on the nine sub screens.

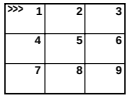

To view the next or the previous nine preset programs on the nine sub screens
Press PROGR +/– on the remote commander or the TV.

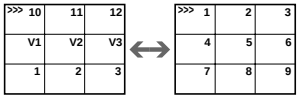

To select the program you want to watch directly after viewing multiple programs
Press the number buttons, –⊖⊕, or press ↑/→/↓/← to move the cursor (>>>) to the screen of the program you want to watch, and press ENTER.

To restore the normal screen
Press PROGR INDEX again or ◔.
You can also select PROGR INDEX or PIP : OFF from the PIP menu, and press ENTER to restore the normal screen.

To view multiple programs on the nine sub screens using the menu

1 Press MENU.

2 Press ↑ or ↓ to move the cursor (▶) to the PIP menu (▭), and press ENTER.

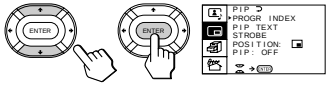

3 Make sure the cursor (▶) appears beside PROGR INDEX, and press ENTER.

Notes
- You can change the position of the nine sub screens using the PIP menu (see "Changing the position of the PIP screen" on page 27).
- You can hear the sound of the main screen when viewing multiple programs on the nine sub screens.
- You can use the number buttons on the remote commander to change the program position of the main screen when viewing multiple programs on the nine sub screens.

Displaying frame-by-frame pictures (STROBE)

You can watch a slow motion movement of the main screen picture which is displayed frame-by-frame on the nine sub screens.

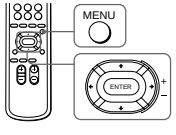

1 Press MENU.

2 Press ↑ or ↓ to move the cursor (▶) to the PIP menu ( ), and press ENTER.

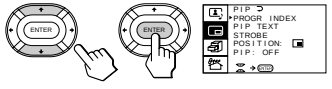

3 Press ↑ or ↓ to move the cursor (▶) to STROBE, and press ENTER.

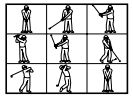

To restore the normal screen

Select STROBE again or PIP : OFF from the PIP menu, and press ENTER.

You can also press , , PROGR +/–, or to restore the normal screen.

Notes

- You can change the position of the nine sub screens using the PIP menu (see "Changing the position of the PIP screen" on page 27).
- You can hear the normal sound when using the STROBE feature.

Using the Picture-in-Picture (PIP) features

With the Picture-in-Picture (PIP) feature, you can display a sub screen within the main picture of different TV programs or video inputs.

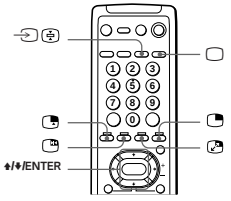

Displaying the PIP screen

You can display the PIP screen using the button on the remote commander or the menu.

Press .

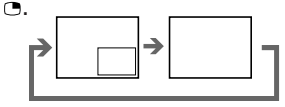

Selecting a TV program or video input in the PIP screen

To select a TV program, press ↑ or ↓, and press ENTER.

To select a video input, press on the remote commander or on the TV.

To display the PIP screen using the menu

1 Press MENU.

2 Press ↑ or ↓ to move the cursor (▶) to the PIP menu ( ), and press ENTER.

3 Press ↑ or ↓ to move the cursor (▶) to PIP, and press ENTER.

4 Press ↑/→/↓/← to select ON, and press ENTER.

5 Press MENU to return to the normal screen.

Changing the position of the PIP screen

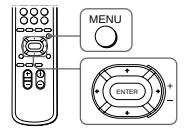

1 Press MENU.

2 Press ↑ or ↓ to move the cursor (▶) to the PIP menu ( ), and press ENTER.

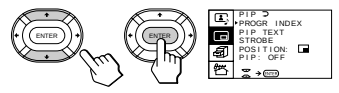

3 Press ↑ or ↓ to move the cursor (▶) to POSITION, and press ENTER.

4 Press ↑/→/↓/← to select the position you want, and press ENTER.

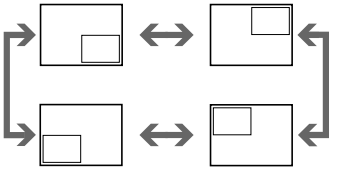

5 Press MENU to return to the normal screen.

Swapping pictures between the main and PIP screens

Press .

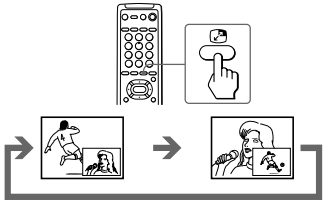

Freezing the PIP screen

Press .

The PIP screen will freeze.

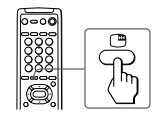

To restore the normal screen

Press again.

Notes

- When you display a video input on the PIP screen at any speed other than the normal one, the picture may be disrupted, depending on the VCR.
- If you display different color systems on the main screen and the PIP screen, the size of the PIP screen may be different and the PIP picture may be disrupted. This does not indicate a malfunction of the TV.

Viewing Teletext

TV stations broadcast an information service called Teletext via a TV channel.
Teletext service allows you to receive various information such as weather forecasts or news at any time.

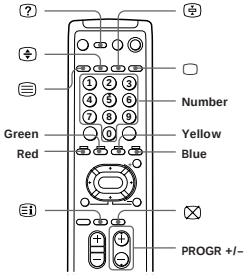

Displaying Teletext

1 Select a TV channel that carries the Teletext broadcast you want to watch.

2 Press ▤ to display the Teletext.
A Teletext page (normally the index page) is displayed. If there is no Teletext broadcast, "100" is displayed at the top left corner of the screen.

To turn off Teletext
Press ▢.

Superimposing a Teletext page on the TV picture

Press ▤.
Each time you press ▤, the screen changes as follows:

→ Teletext → Teletext and TV → TV →

Checking the contents of a Teletext service (INDEX)

Press ▤ to display an overview of the Teletext contents and page numbers.

Using FASTEXT

This feature allows you to quickly access a Teletext page that uses FASTEXT. When a FASTEXT program is broadcasted, the colored menus appear at the bottom of the screen. The colors of the menus correspond to the red (■), green (■), yellow (■), and blue (■) colored-coded buttons on the remote commander.

To access a FASTEXT menu
Press the color-coded button on the remote commander that corresponds to the colored menu which appears at the bottom of the screen. The menu page appears on the screen after several seconds.

Selecting a Teletext page

Press the number buttons to enter the three-digit page number of the Teletext page you want.
If you make a mistake, re-enter the correct page number.

To access the next or previous page
Press PROGR +/–.

You can also access a Teletext page of any page numbers that appear in the colored column at the bottom of the screen using the corresponding color-coded button on the remote commander.

Holding a Teletext page (HOLD)

A Teletext page may consist of several subpages. You can stop the page scrolling in order to read the text at your own pace.

Press ⊕.
The HOLD symbol "⊕" appears at the top left corner of the screen.

To resume normal Teletext operation
Press ⊕ again or ▤.

Revealing concealed information (REVEAL)

The REVEAL option lets you disclose concealed information, such as an answer to a quiz that you find on some of the Teletext pages.

Press ?.

To conceal the information
Press ? again.

Enlarging the Teletext display (ENLARGE)

Press ⊕.
Each time you press ⊕, the Teletext display changes as follows:

→ Enlarge upper half → Enlarge lower half →
Normal size ←

Waiting for a Teletext page while watching a TV program (TEXT CLEAR)

1 Enter the page number of the Teletext that you want to refer to, then press ⊠.

2 When the page number is displayed on the screen, press ▤ to turn on the Teletext.

Displaying Teletext on the PIP screen (PIP TEXT)

The PIP TEXT feature enables you to display a Teletext page on the PIP screen while watching a TV program.

You can display the Teletext on the PIP screen using the button on the remote commander or the menu.

1 Select a TV channel that carries the Teletext broadcast you want to watch.

2 Press PIP TEXT.

To restore the normal screen

Press PIP TEXT again, or press ▭, ⊖⊕, or PROGR +/–.

You can also select PIP : OFF from the PIP menu, and press ENTER to restore the normal screen.

To display a Teletext page on the PIP screen using the menu

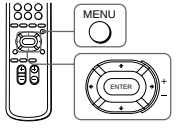

1 Press MENU.

2 Press ↑ or ↓ to move the cursor (▶) to the PIP menu (▭) , and press ENTER.

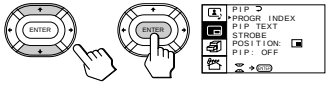

3 Press ↑ or ↓ to move the cursor (▶) to PIP TEXT, and press ENTER.

4 Press ↑/→/↓/← to select the Teletext page you want to watch.

Notes

- You can also use the color-coded buttons (see page 28) while displaying a Teletext page on the PIP screen.
- To select a Teletext page on the PIP screen, press ↑/→/↓/← once only.
  If you press ↑/→/↓/← continuously, the Teletext page numbers also change continuously at a fast speed.
- You can change the position of a Teletext page on the PIP screen using the PIP menu (see "Changing the position of the PIP screen" on page 27).

Viewing a video game screen (GAME MODE)

The GAME MODE feature optimizes the video game screen by giving a soft picture and dynamic sound effect.

You can display a video game screen using the button on the remote commander or the menu.

Press GAME.

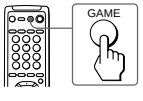

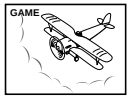

The picture and sound change to the mode that is suitable for video games.

To view a video game screen using the menu

1 Press MENU.

2 Press ↑ or ↓ to move the cursor (▶) to the FEATURES menu (▭), and press ENTER.

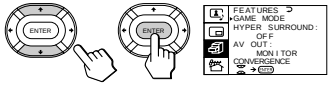

3 Make sure the cursor (▶) appears beside GAME MODE, and press ENTER.

To restore the normal picture and sound modes

Press ▭, ⊖⊕, or PROGR +/–.

Notes

- If you press the GAME button when the TV is in the standby mode, the TV turns on automatically and the picture and sound change to the mode that is suitable for video games.
- To display a video game screen, connect the video game equipment to the ⊖ 3 (video input) jacks at the front or the rear of the TV.

Customizing the TV

Using the AV OUT (advanced rec-out) terminal

You can select the output signal from the ⇨ (monitor/TV output) jacks at the rear of the TV. However, the signals of the PROGRAM INDEX, STROBE, PIP modes, the signals from the ⇦ (component video input) jacks, and the Teletext broadcast cannot be output even though MONITOR is selected.

1 Press MENU.

2 Press ↑ or ↓ to move the cursor (▶) to the FEATURES menu (), and press ENTER.

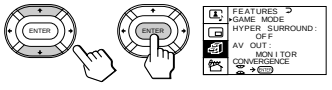

3 Press ↑ or ↓ to move the cursor (▶) to AV OUT, and press ENTER.

4 Press ↑/→/↓/← to select the output signal, and press ENTER.

Select	To
TV	Output the signal of the TV broadcast.
MONITOR	Output the signal of the picture you are watching as a main picture.

Notes

- Do not change the channel while recording with a VCR through the ⇨ (monitor/TV output) jacks. If you change the channel, it also changes the channel you are recording.
- When the signals from the ⇦ (component video input) jacks are displayed on the main screen, the signals can't be output even though MONITOR is selected.

Troubleshooting

If you have any problems, read this manual again and check the countermeasure for each of the symptoms listed below.
If the problem persists, contact your nearest Sony dealer or authorized service center.

Snowy picture
Noisy sound

➡Check the antenna.
➡Check the antenna connection on the TV and on the wall.
➡Check the TV system (TV SYS) setting.
➡Check the ATT (attenuator) setting.

Dotted lines or stripes

➡This may be caused by local interference (e.g. cars, neon signs, hair dryers, etc.). Adjust the antenna for minimum interference.

Double images or "ghosts"

➡This may be caused by reflections from nearby mountains or buildings. A highly directional antenna may improve the picture.

Good picture
Noisy sound

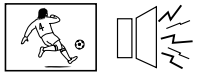

➡Check the TV system (TV SYS) setting.

No picture
No sound

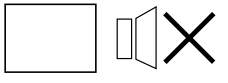

➡Press ⏻.
➡Press ① to turn off the TV for about five seconds and then turn it on again.
➡Check the power cord connection.
➡Check the antenna connection.
➡Check the VCR connections.

Good picture
No sound

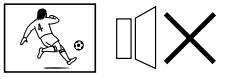

➡Press 🔊+.
➡If "CENTER IN" is displayed on the screen, select "SPEAKER: MAIN" of the AUDIO ADJUST menu.
➡Press 🔇.
➡Press A/B⇳.

No color

➡Adjust the COLOR level in the VIDEO ADJUST menu of the PERSONAL option.
➡Check the color system (COL SYS) setting.

TV cannot receive stereo broadcast signal

➡Press A/B⇳ until "AUTO" appears on the screen.

TV cabinet creaks

➡Even if the picture or the sound is normal, changes in the room temperature sometimes make the TV cabinet expand or contract, making a noise. This does not indicate a malfunction.

MEMO

SECTION 2
DISASSEMBLY

2-1. REAR BOARD REMOVAL

• KP-EF41

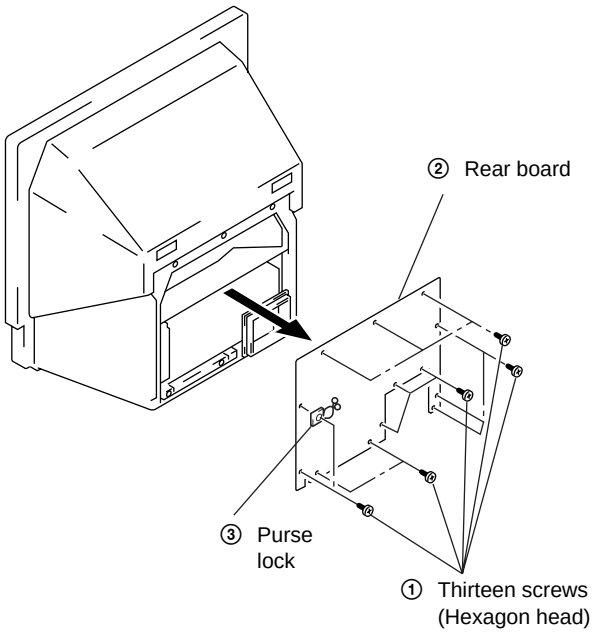

• KP-EF53

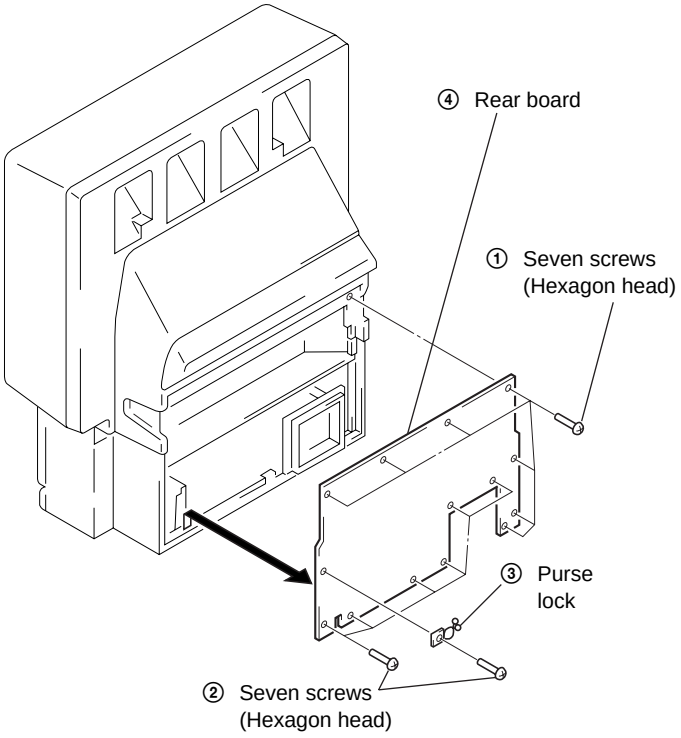

• KP-EF48

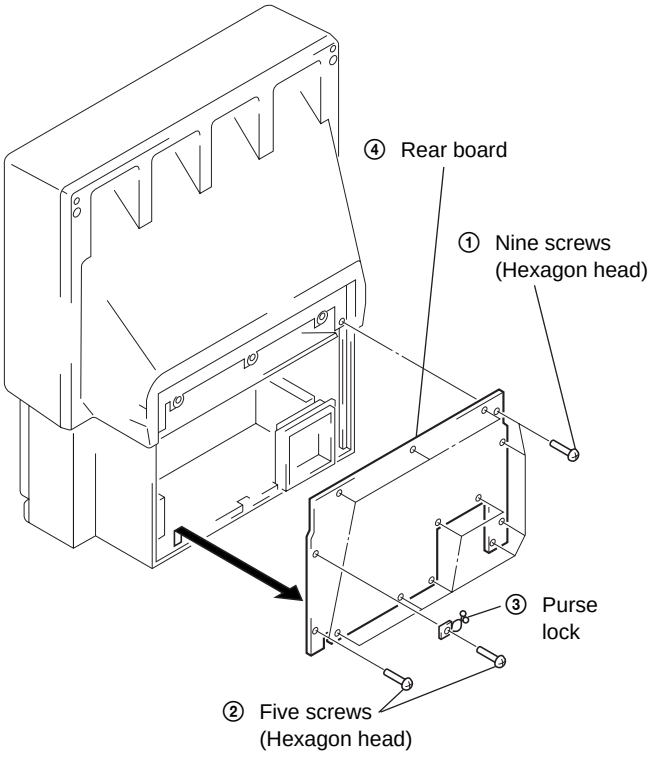

2-2. MAIN BRACKET SECTION REMOVAL

• **KP-EF41**

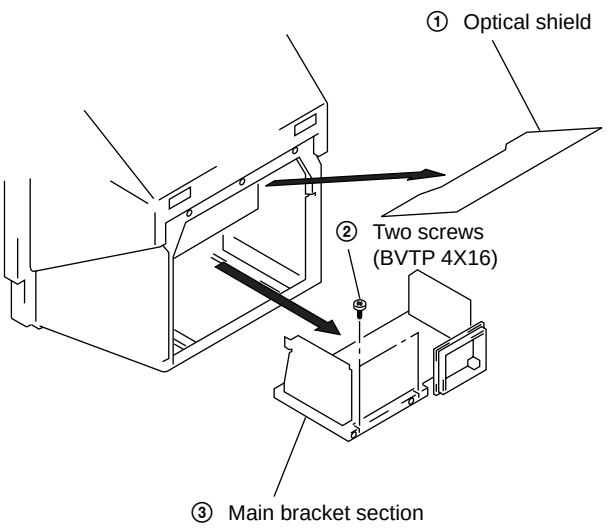

• **KP-EF53**

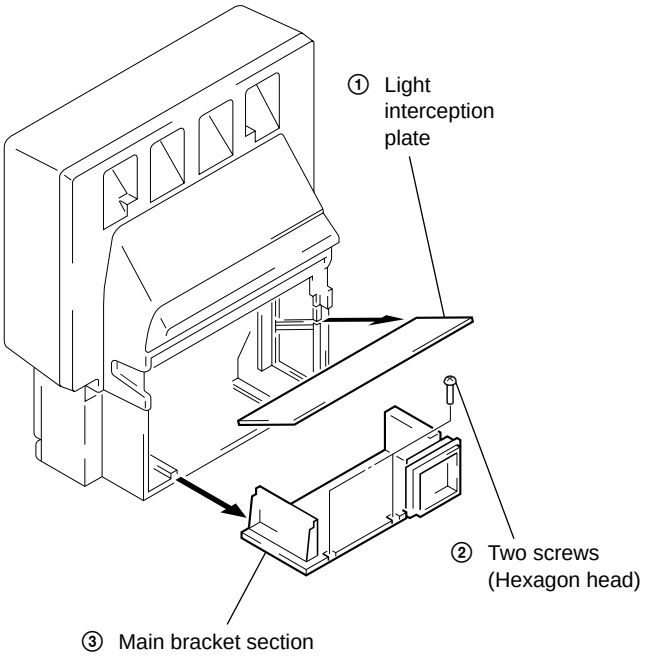

• **KP-EF48**

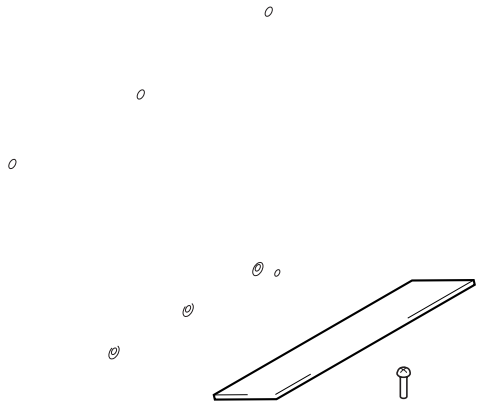

2-3. SERVICE POSITION

• KP-EF41

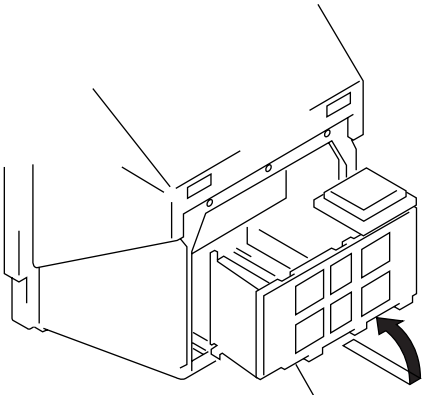

• KP-EF53

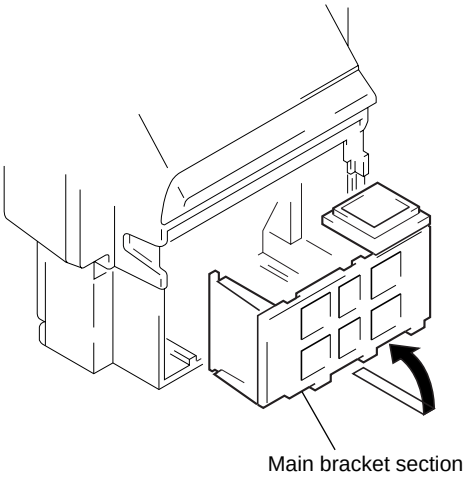

• KP-EF48

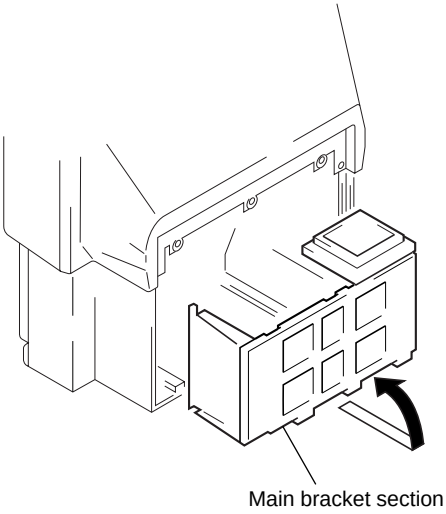

2-4. H1 BOARD, H2 BOARD AND RESISTOR (HIGH VOLTAGE) REMOVAL

• KP-EF41

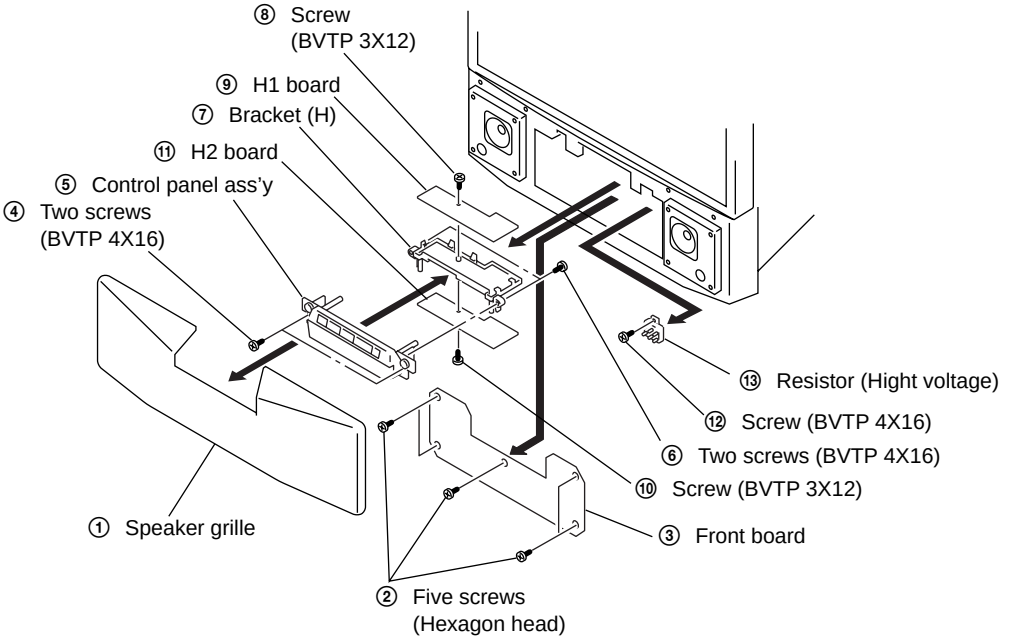

• KP-EF48

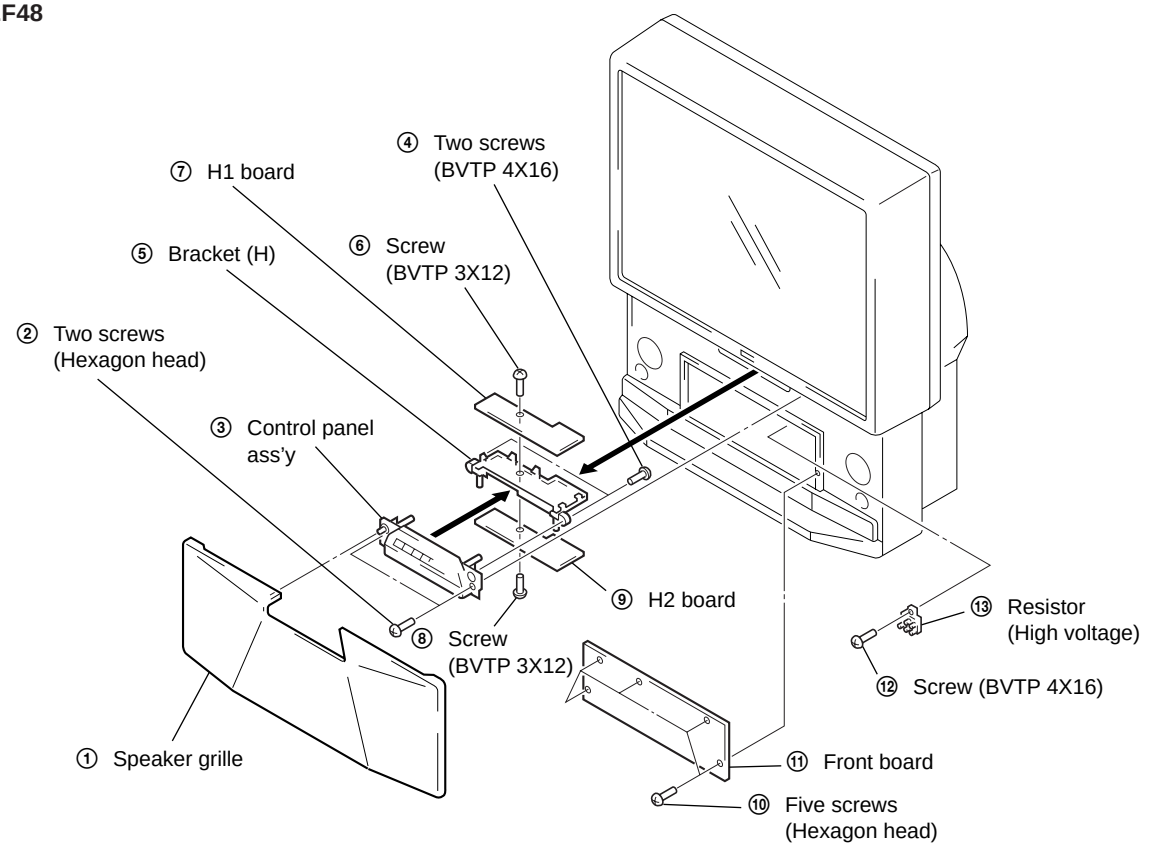

• **KP-EF53**

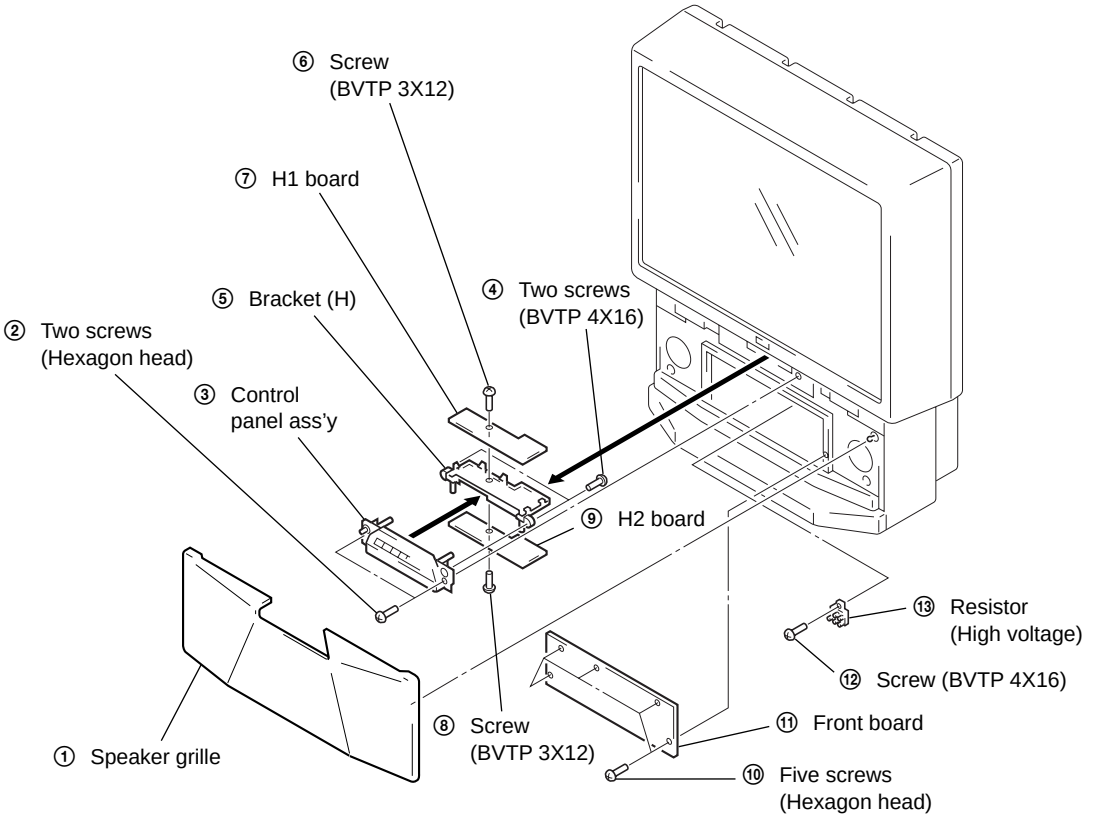
⑥ Screw
(BVTP 3X12)
⑦ H1 board
⑤ Bracket (H)
④ Two screws
(BVTP 4X16)
② Two screws
(Hexagon head)
③ Control
panel ass'y
⑨ H2 board
⑬ Resistor
(High voltage)
⑫ Screw (BVTP 4X16)
⑧ Screw
(BVTP 3X12)
⑪ Front board
① Speaker grille
⑩ Five screws
(Hexagon head)

2-5. BEZNET SECTION REMOVAL

• KP-EF41

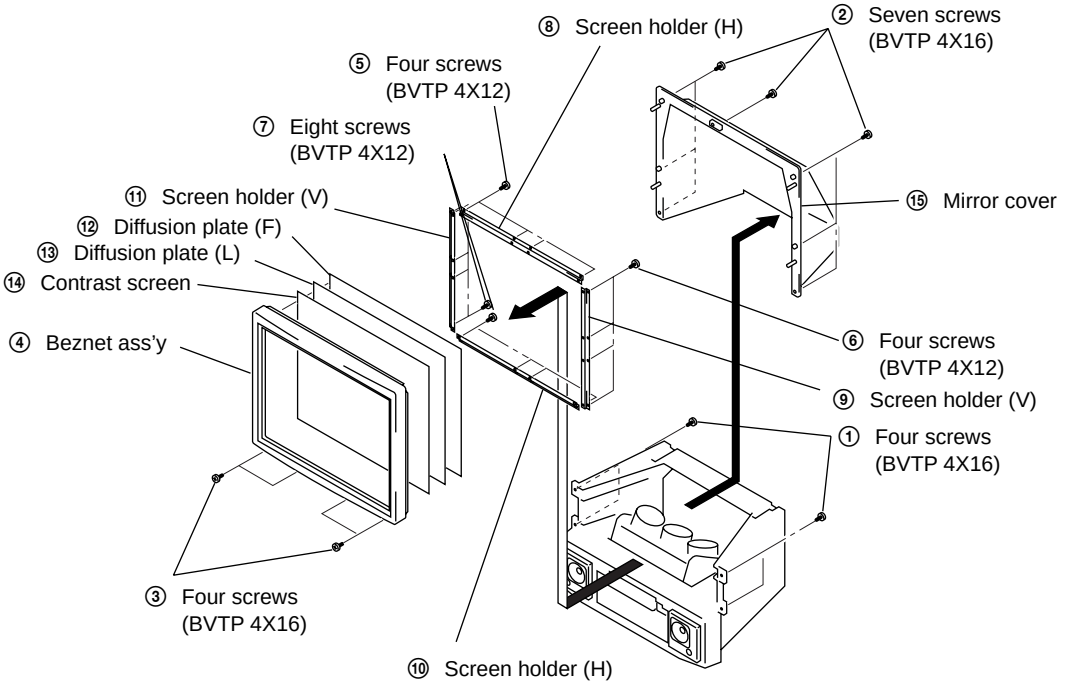

• KP-EF48

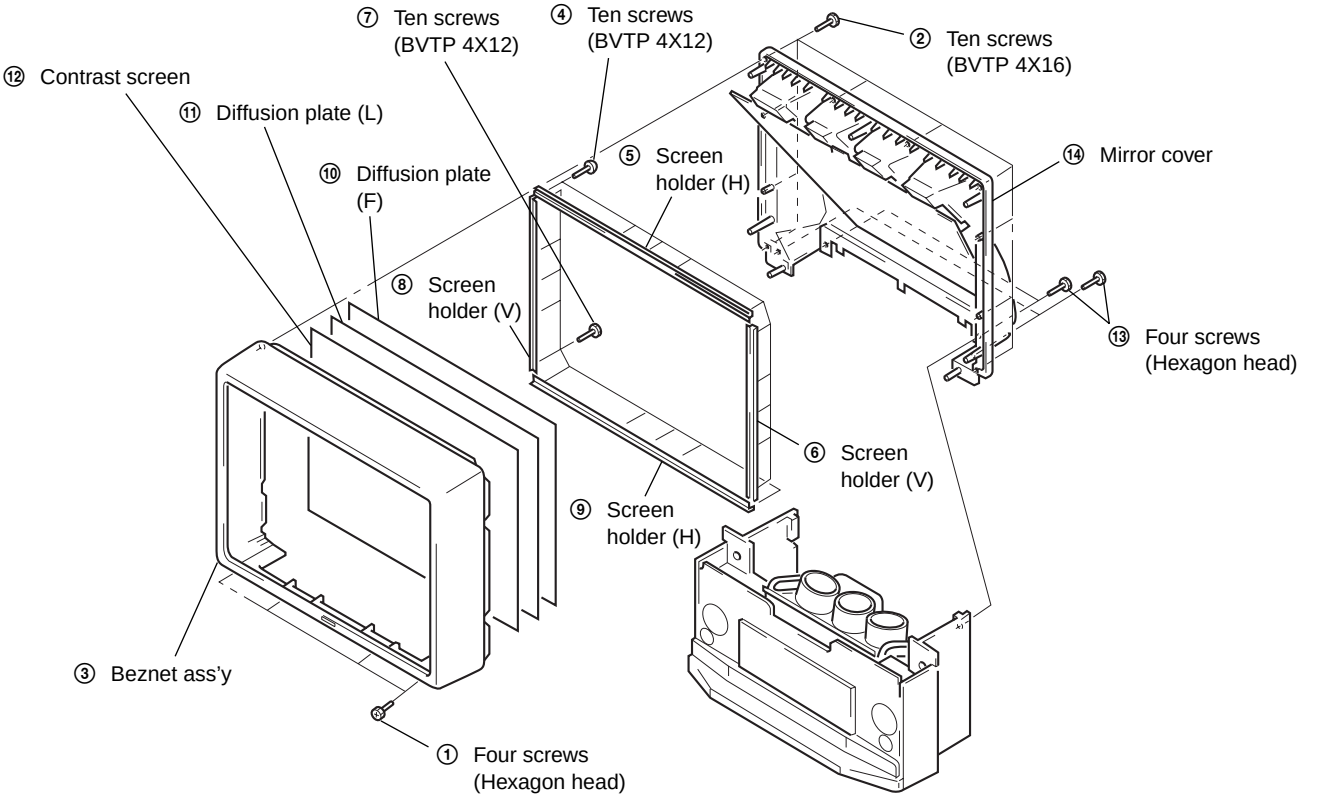

• **KP-EF53**

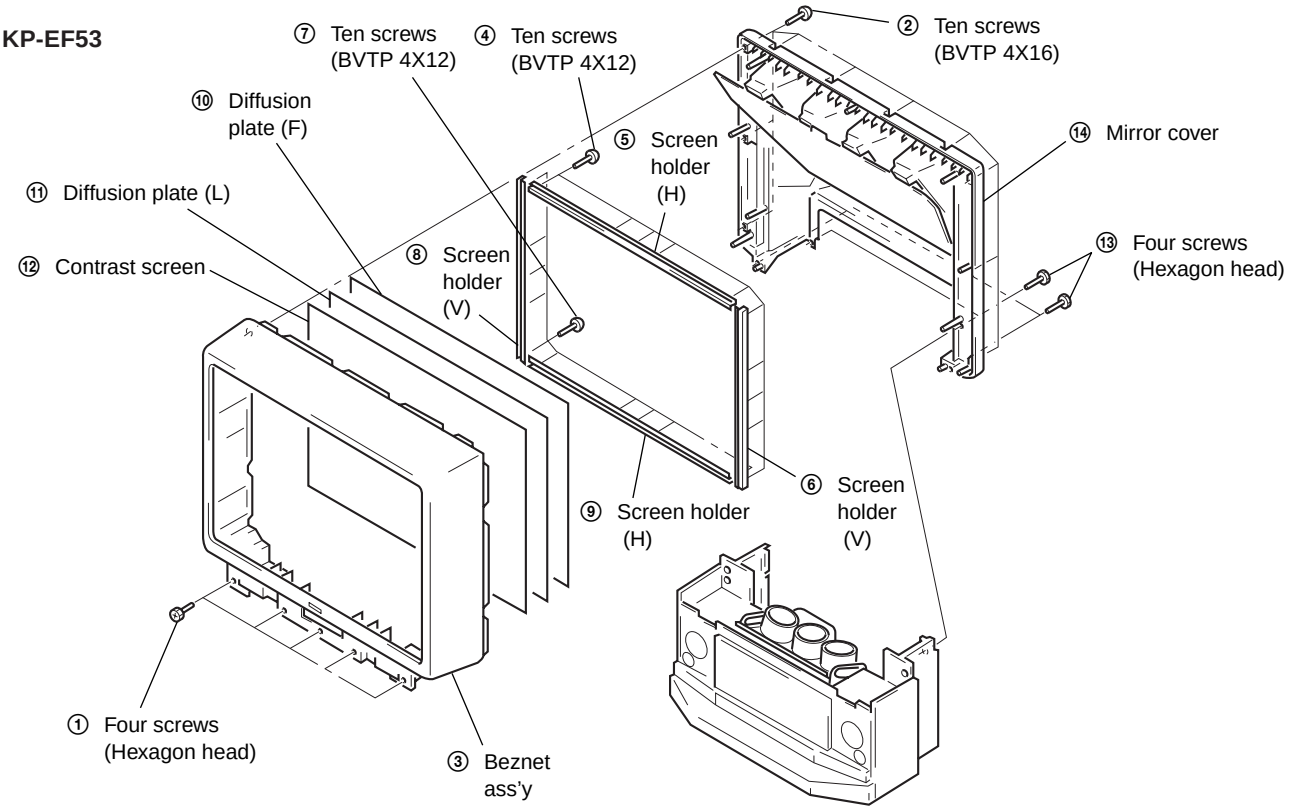
⑦ Ten screws (BVTP 4X12)
④ Ten screws (BVTP 4X12)
② Ten screws (BVTP 4X16)
⑩ Diffusion plate (F)
⑤ Screen holder (H)
⑭ Mirror cover
⑪ Diffusion plate (L)
⑫ Contrast screen
⑧ Screen holder (V)
⑬ Four screws (Hexagon head)
⑥ Screen holder (V)
⑨ Screen holder (H)
① Four screws (Hexagon head)
③ Beznet ass'y

2-6. G BOARD REMOVAL

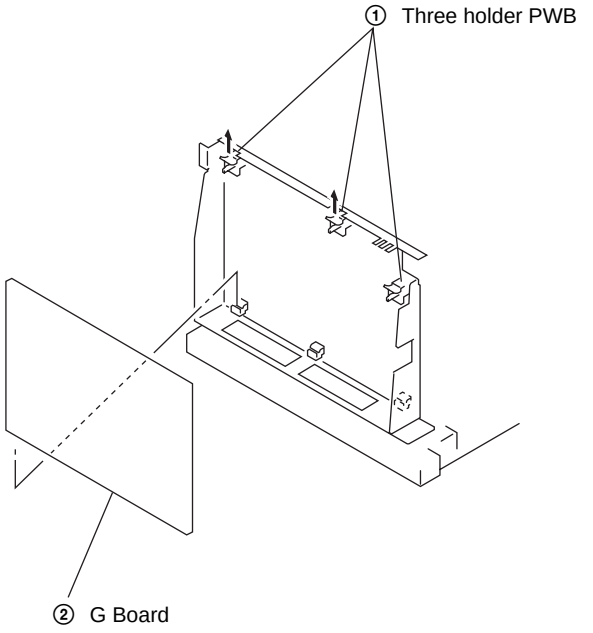

2-7. P1 BOARD AND V2 BOARD REMOVAL

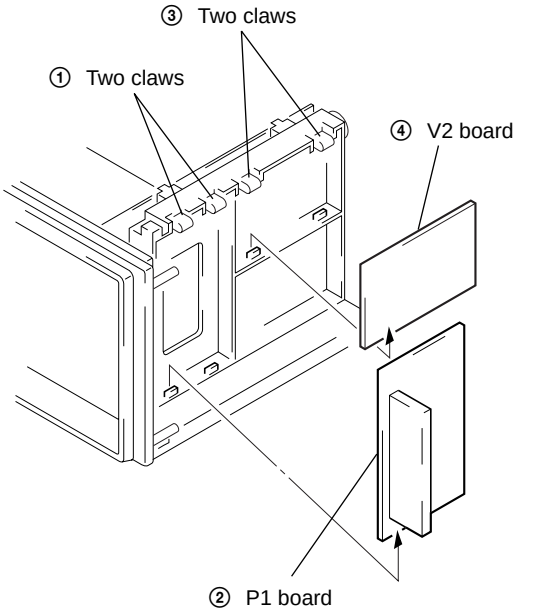

2-8. UG BOARD, AG BOARD AND S BOARD REMOVAL

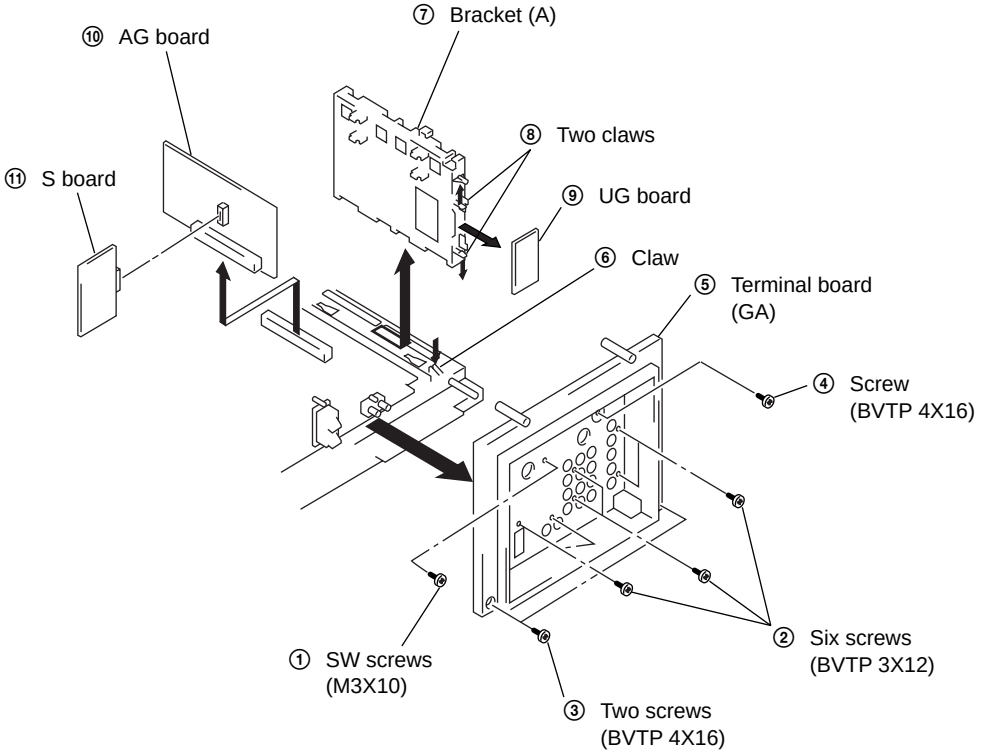

2-9. HIGH-VOLTAGE CABLE INSTALLATION AND REMOVAL

(1) Remover

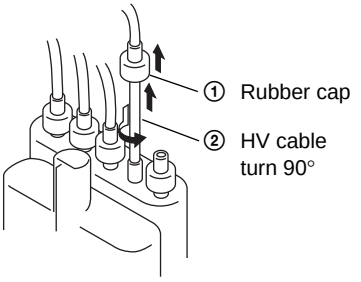

(2) Installation

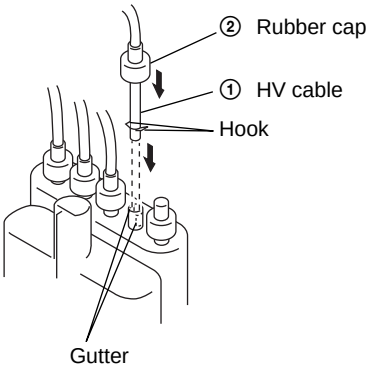

2-10. MECHASEL ASSY REMOVAL

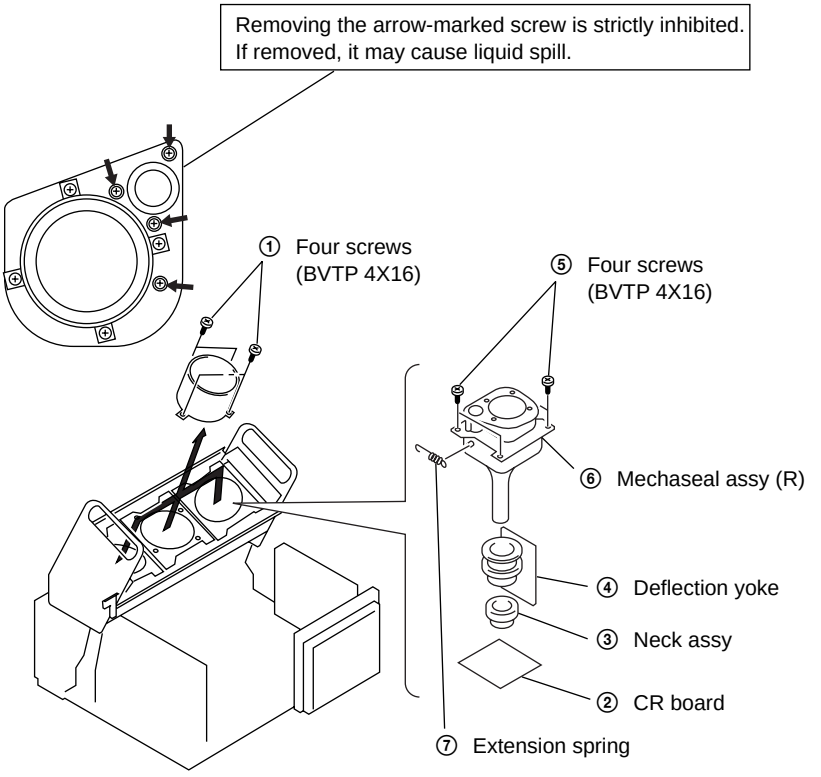

2-11. CHASSIS BLOCK REMOVAL

(1) H1, H2 BOARDS AND RESISTOR REMOVAL

• KP-EF41

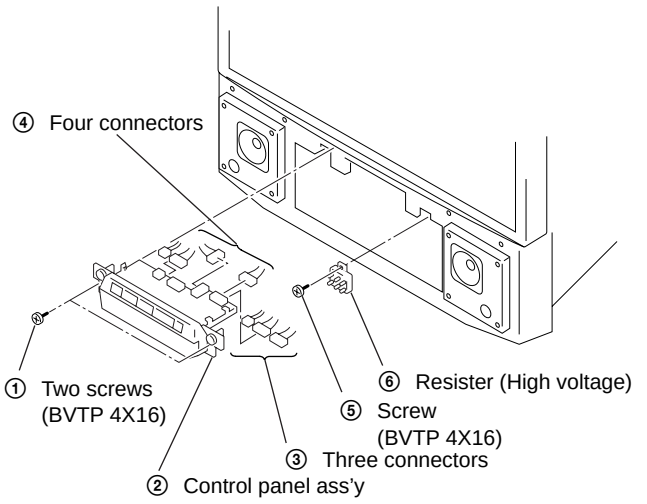

• KP-EF53

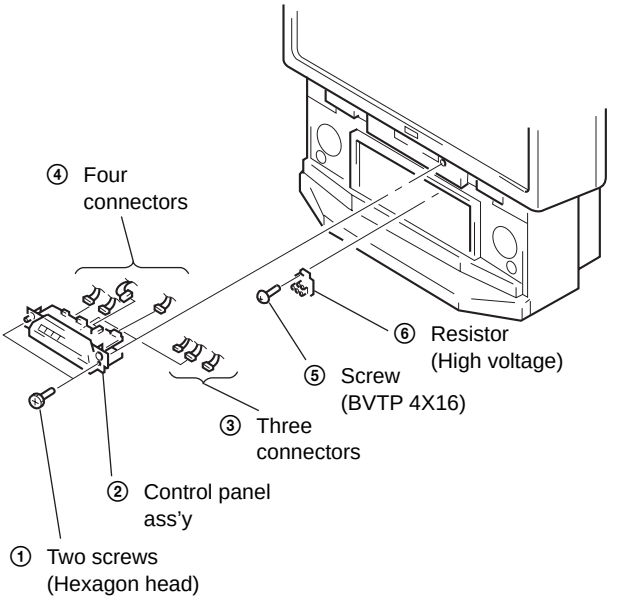

• KP-EF48

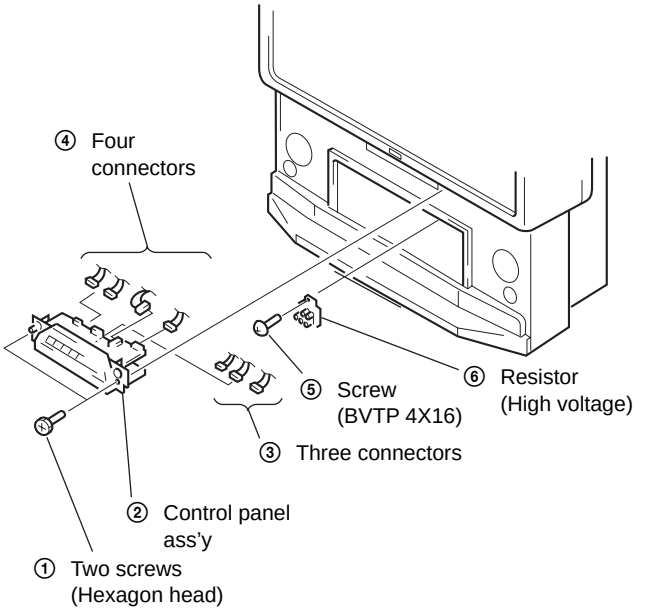

(2) MAIN BRACKET REMOVAL

* Pay particular attention to the wires of each PCB when puling out the main bracket.

• KP-EF41

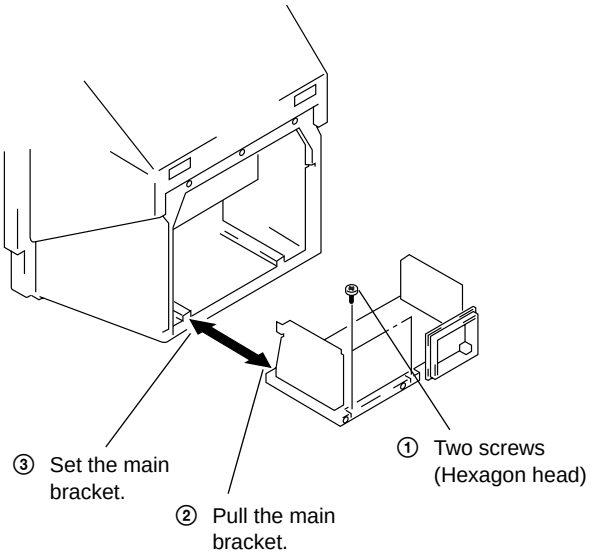

• KP-EF53

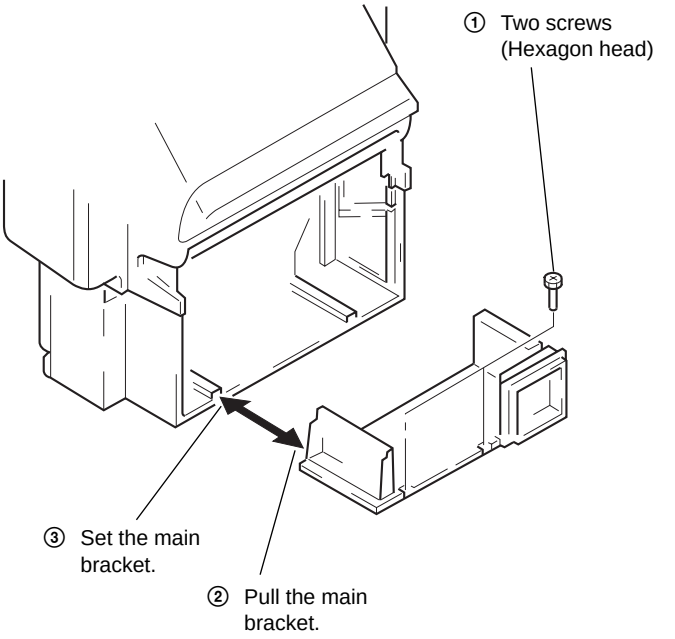

• KP-EF48

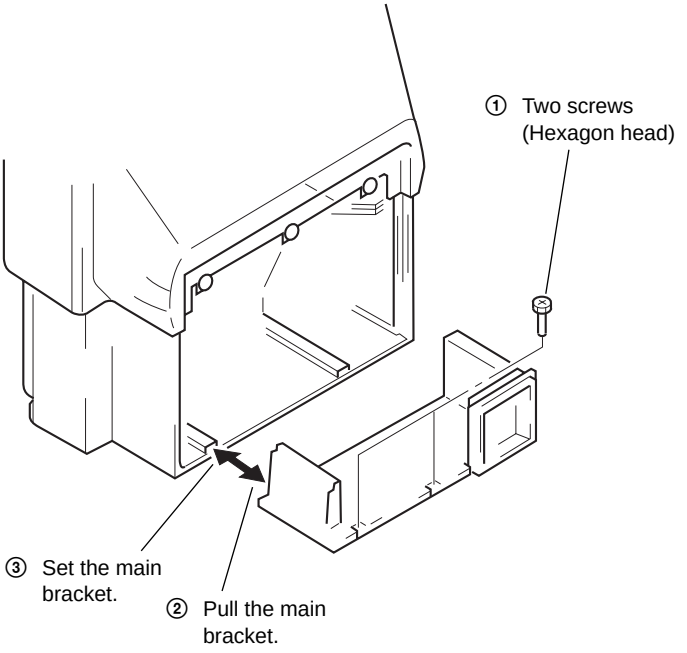

(3) CHASSIS BLOCK REMOVAL

* Pull out the chassis block by gripping the handles as shown in the diagram.
  At this time, pay particular attention to the components removed in (1).

• KP-EF41

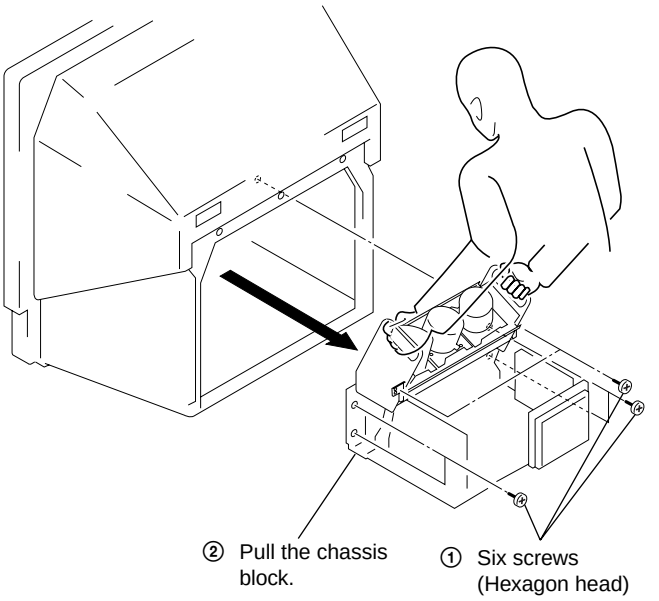

• KP-EF53

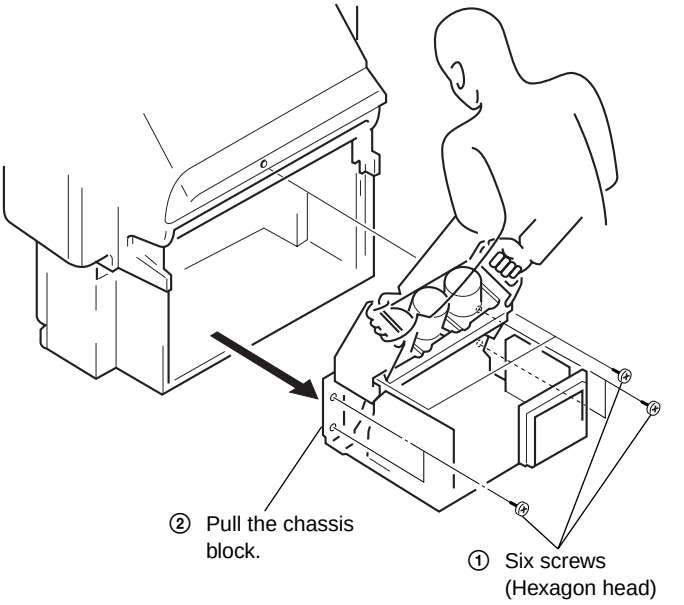

• KP-EF48

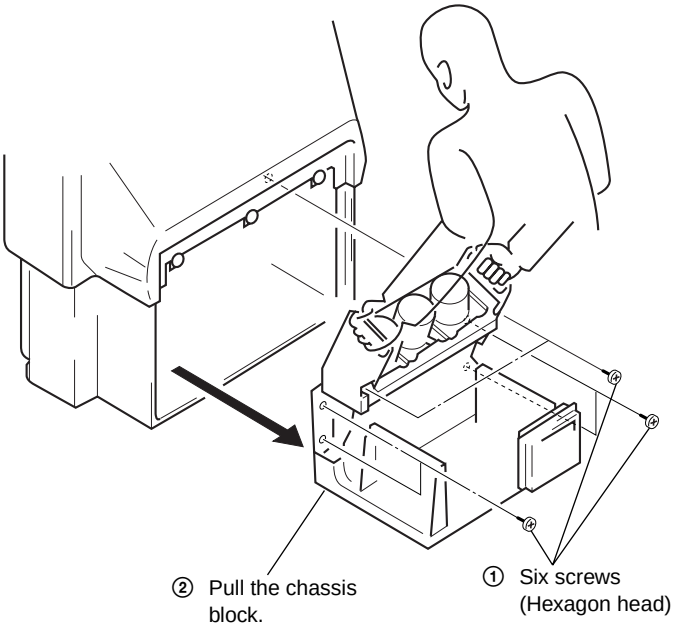

SECTION 3
SET-UP ADJUSTMENTS

3-1. SCREEN VOLTAGE ADJUSTMENT (ROUGH ALIGNMENT)

1. Receive the Monoscope signal.
2. Set 50% BRIGHTNESS and minimum PICTURE.
3. Turn the red VR on the FOCUS Pack all the way to the left and then gradually turn it to the right until the point where you can see the retrace line.
4. Next gradually turn it to the left to the position where the retrace line disappears.

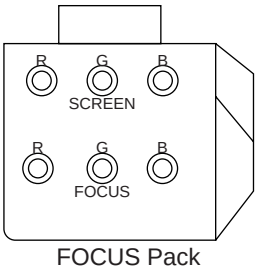

FOCUS Pack

Fig. 3-1

3-2. FOCUS ADJUSTMENT

1. Loose the lens screw.
2. Set in service mode.
3. Place the caps on the red and blue lens so that only the green color is shown.
4. Press the Commander button and select OSD (CHSW) to display the test signal (crosshatch) on the screen.
5. Rotate the green lens and align with the optimal focus point from the test signal.
6. Rotate the green VR on the FOCUS Pack and align to obtain the optimal focus point.
7. Perform the same alignment for red and blue lenses and electric focus.
8. Fix lens screw.

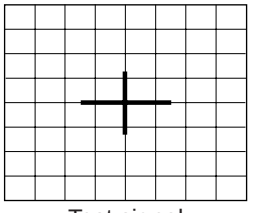
Test signal

Fig. 3-2

3-3. SCREEN (G2) ADJUSTMENT

1. Connect JIG (A) to 200 V and GND.
2. Select VIDEO mode without signals.
3. Connect JIG to the TP701(KR), TP731(KG) or TP761(KB) of CR board, CG board and CB board.
4. Adjust R, G and B screen voltage to until retrace line disappears with screen VR on the focusblock.

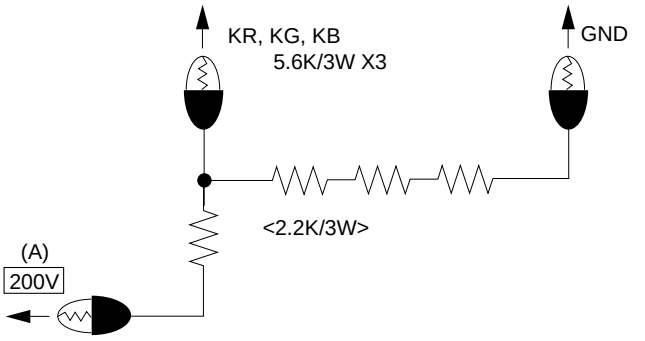

Fig. 3-3

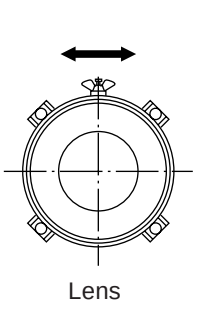
Lens

Fig. 3-4

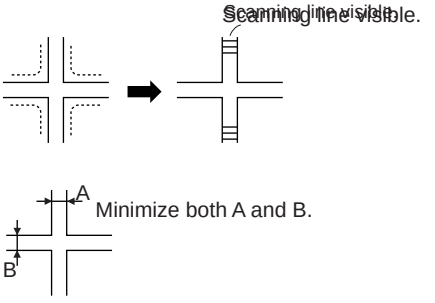

Fig. 3-5

3-4. DEFLECTION YOKE TILT ADJUSTMENT

1. Set to receive the Monoscope signal.
2. Set in service mode.
3. Place the caps on the red and blue lens so that only the green color.
4. Loosen the deflection yoke setscrew and align the tilt of the Deflection Yoke so that the bars at the center of the monoscope pattern are horizontal.
5. After aligning the deflection yoke, fasten it securely to the funnel-shaped portion (neck) of the CRT.
6. The tilt of the deflection yoke for red and Blue is aligned the same as was done for green.

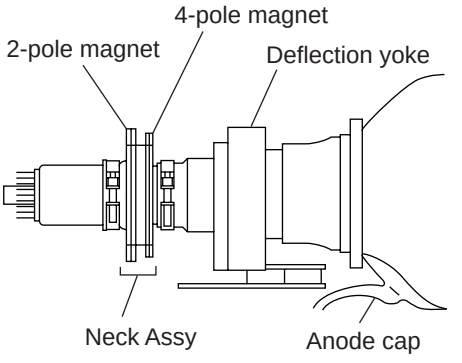

Fig. 3-6

3-5. 2-POLE MAGNET ADJUSTMENT

1. Set in service mode.
2. Set to receive the Dot signal.
3. Place the caps on the red and blue lens so that only the green color is shown.
4. Turn the green VR on the focus block to the right and set to overfocus to enlarge the spot.
5. Now align the 2-Pole Magnet so that the enlarged spot is in the center of the Just Focus spot.
6. Align the green focus VR and set for just (precise) focus.
7. Perform the same alignment for red and blue.

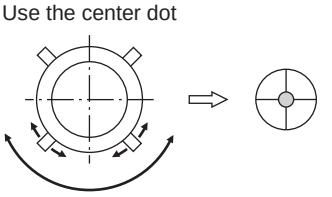

Fig. 3-7

3-6. 4-POLE MAGNET ADJUSTMENT

1. Set in service mode.
2. Set to receive the Dot signal.
3. Place the caps on the red and blue lens so that only the green color is shown.
4. Turn the green VR on the focus block to the left and set to underfocus to enlarge the spot.
5. Now align the 4-Pole Magnet so that the enlarged spot becomes a perfect circle.
6. Perform the same alignment for red and blue.

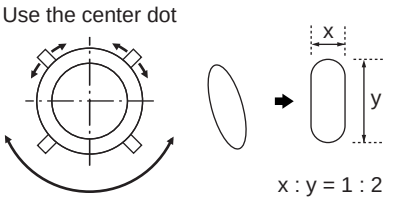

Fig. 3-8

3-7. DEFOCUS ADJUSTMENT (Blue)

1. Receive the Dot signal.
2. Place the caps on the red and green lens so that only the blue color is shown.
3. Rotate the blue focus volume on the focus pack and adjust to obtain best electrical focus.
4. Rotate Blue focus volume of focus pack clocwise, so that diameter of the Dot see Caution.

[Change Blue Defocus]

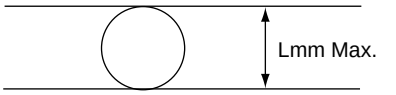

Inch	41"	48"	53"
L	7	8	9

Fig. 3-10

3-8. GREEN AND RED FOCUS ADJUSTMENT

3-8-1. Green and Red Lens Focus Adjustment

1) Input a monoscope signal.
2) Place a lens cover over Red and Blue lenses and project only Green.
3) Rotate the Green lens and ajust to obtain the best lens focus.
4) Fix lens screw.
5) Repeat above process for Red.

3-8-2. Green and Red Electrical Focus Adjustment

1) Input a monoscope signal.
2) Project only Green.
3) Rotate the green focus volume on the focus pack and adjust to obtain an optimal electrical focus in the top right corner, taking care of center focus is not NG. obtain a compromise between center and corner focus.
4) Repeat above process for Red.

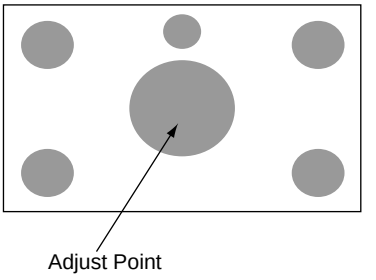

Fig. 3-11

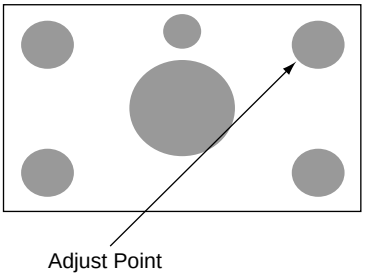

Fig. 3-12

SECTION 4
SAFETY RELATED ADJUSTMENT

When replacing the following components marked with ◪ on the schematic diagram, always check hold-down voltage and if necessary re-adjust.

Part Replaced (⋈)
R1

Part Replaced (◪)	
E Board	C515, C516, C554, D504, D507, L506, Q502, R1, R514, R516, R517, T502, T504 (FBT)
G Board	IC6008

4-1. HV HOLD-DOWN ADJUSTMENT

1. Remove CN810. Connect HV meter to HV Block.
2. Connect External Power Supply to CN810 ② pin (+135V) and ① pin (GND).

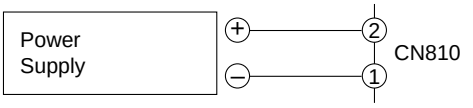

Fig. 4-1

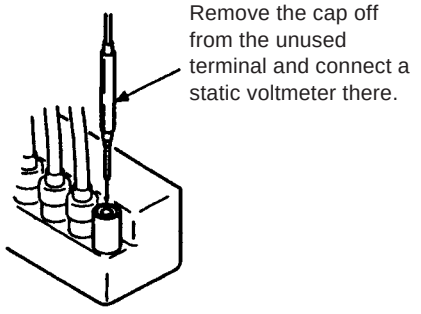

Fig. 4-2

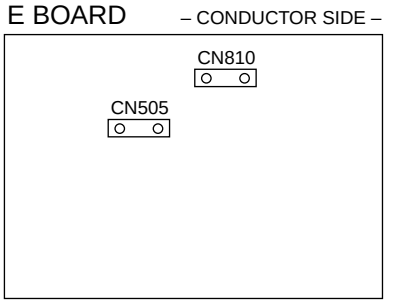

Fig. 4-3

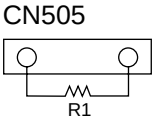

Fig. 4-4

3. Turn on the set.
4. Slowly up the supply voltage from 0V to 135V.
5. Receive dot picture and set PICTURE/BRIGHTNESS to minimum.
6. Slowly up the voltage until hold-down circuit works (picture disappear).
7. Read the HV meter of peak HV voltage.
   Spec: 34.5±0.75KV
8. If Hold-down voltage is less than 33.75KV then solder R1=820K.
9. If hold-down voltage is over than 35.25KV then take-off R514 and solder R1=9.1K.

SECTION 5
CIRCUIT ADJUSTMENTS

5-1. ADJUSTMENTS WITH COMMANDER

Service adjustments are made with the RM-871 that comes with this unit.

Entering service mode

With the unit on standby

↓

[i+]

↓

[5]

↓

◿

↓

▢

The operation sequence puts the unit into service mode.

[1], [4]	Select the adjustment item.
↓	
[3], [6]	Raise/lower the data value.
↓	
[MUTING]	Writes.
↓	
[0]	Executes the writing.

[7], [0]	All the data becomes the values in memory.
[8], [0]	All user control goes to the standard state.
[5], [0]	Service data initialization (Be sure not to use usually.)
[i+], [0]	Write 50Hz adjustment data to 60Hz, or vice versa. (not to use [2], [0].)

The screen display is :

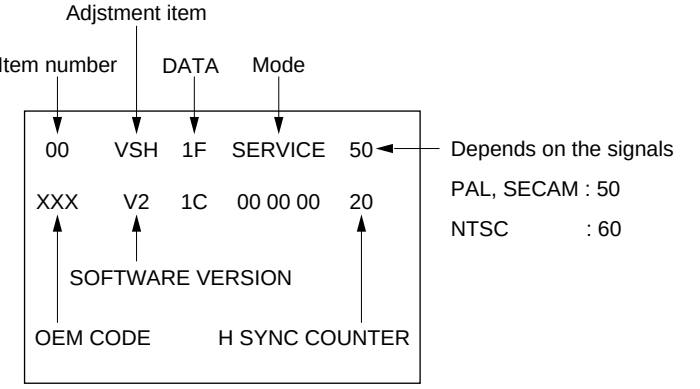

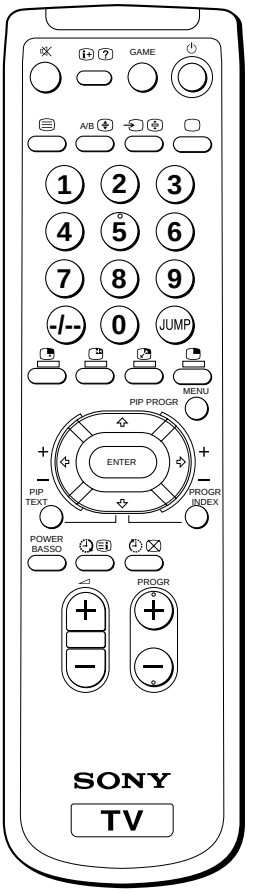

RM-871

5-2. ADJUSTMENT METHOD

Item Number 00

This explanation uses V-Position as an example.

1. Select 00 VSH with the [1] and [4] buttons.
2. Raise/lower the data with the [3] and [6] buttons.
3. Select the optimum state. (The standard is IF for PAL reception.)
4. Write with the [MUTING] button. (The display changes to WRITE.)
5. Execute the writing with the [0] button. (The WRITE display will be changed back to SERVICE.)

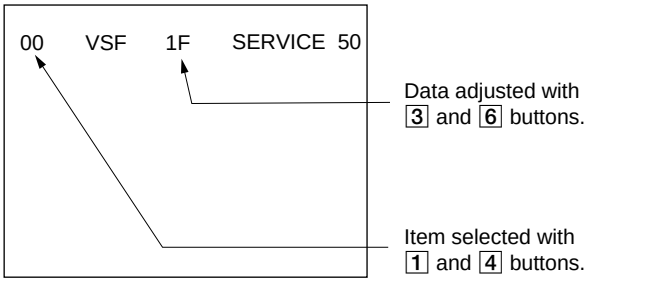

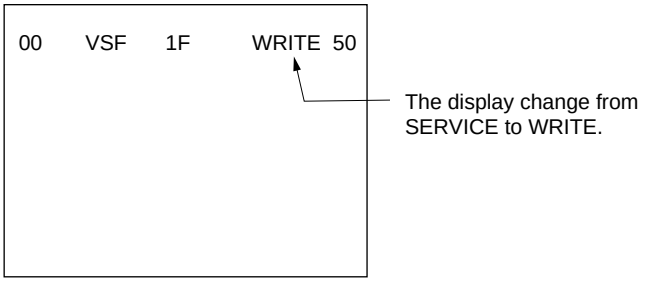

Written with [MUTING]

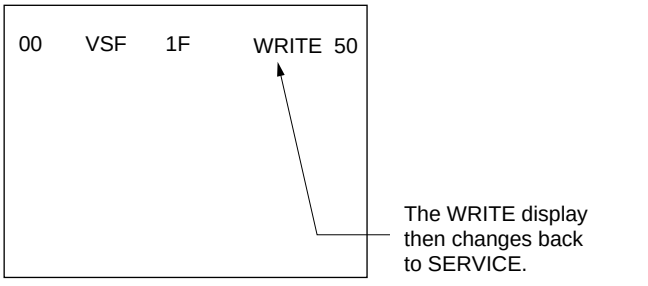

Write executed with [0]

Use the same method for Items Number 00-99. Use [1] and [4] to select the adjustment item, use [3] and [6] to adjust, write with [MUTING], then execute the write with [0].

- As for V-FREQ, by searching the bolded screen V range with adjusting data.

Note : 1. For adjustment Items that have differnt standard data between 50Hz or 60Hz and normal or wide, be sure to use the respective input signal while adjusting.
2. In [WRITE], the data for all items are written into memory.

5-3. ADJUSTMENT AFTER IC1001 and IC1702 REPLACEMENT

1. Enter to Service Mode.
2. Change IC1001 (Except for Registration Adjustment).
   Change IC1702 (Only Registration Adjustment).
3. Call each item number, and check if the respective screen shows the normal picture.
   In cases where items are not well adjusted, recitify the items with fine adjustment.
   Write the data per each item number ([MUTING] + [0])
4. Select item numbers “98” (OP0) and “99” (OP1) and respectively set the bit per model with command buttons [3] and [6].

Adjustment Item Table

Item Display	Adj Item	Data Range	Std Values	Register Name	Device
00	VSH	00~3F	1B	V POSITION	CXA2050S
01	VSZ	00~3F	21	V SIZE	
02	HSH	00~0F	07	H POSITION	
03	HSZ	00~3F	12	H SIZE	
04	SCR	00~0F	06	S CORRECTION	
05	VLN	00~0F	08	V LINEARITY	
06	PAP	00~3F	OE	PIN COMP	
07	PPH	00~0F	05	PIN PHASE	
08	UCP	00~0F	05	UP CORNER PIN	
09	LCP	00~0F	05	LOW CORNER PIN	
0A	BOW	00~0F	05	AFC-BOW	
0B	ANG	00~0F	09	AFC-ANGLE	
OSD0	CHSW	0,1	0	Hatch Display (0: Disp Hatch, 1: No Disp)	CXP86213-002S
OSD1	OSDH	1-32	10	OSD H POS	
OSD2	OSDV	1-32	10	OSD V POS	
OSD3	VMRK	0,1	0	V SIZE Mark	
SFT0	SFTE	0,1	1	Shift Enable	
SFT1	SFTF	0	0	Shift Fast	
GH0	GSEL	0,1	0	OSD Select for GH, GV (0: G + R, 1: Green)	
GH1	CENT	0	0	CENTER	
GH2	SKEW	–127~+127	0	SKEW	
GH3	BOW	–127~+127	0	BOW	
GH4	4bow	–127~+127	0	4th BOW	
GH5	SIZE	–127~+127	0	SIZE	
GH6	LIN	–127~+127	0	LINEARITY	
GH7	MSIZ	–127~+127	0	MID SIZE	
GH8	MLIN	–127~+127	0	MID LINEARITY	
GH9	KEY	–127~+127	0	KEYSTONE	
GH10	SSKW	–127~+127	0	SUB SKEW	
GH11	MPIN	–127~+127	15	MID PINCUSION	
GH12	PIN	–127~+127	–12	PINCUSION	
GH13	SBOW	–127~+127	8	SUB BOW	
GH14	MBOW	–127~+127	0	MID BOW	
GH15	4PIN	–127~+127	0	4th PINCUSION	
GH16	4SBO	–127~+127	0	rth SUB BOW	
GV0	CENT	0	0	CENTER	
GV1	SKEW	–127~+127	0	SKEW	
GV2	BOW	–127~+127	0	BOW	
GV3	SIZE	–127~+127	0	SIZE	
GV4	LIN	–127~+127	0	LINEARITY	
GV5	MSIZ	–127~+127	0	MID SIZE	
GV6	MKEY	–127~+127	0	MID KEYSTONE	
GV7	KEY	–127~+127	0	KEYSTONE	
GV8	SSKW	–127~+127	0	SUB SKEW	
GV9	MPIN	–127~+127	0	MID PINCUSION	
GV10	PIN	–127~+127	20	PINCUSION	
GV11	SBOW	–127~+127	16	SUB BOW	
GV12	WAVE	–127~+127	0	WAVWE	
GV13	4PIN	–127~+127	25	4th PINCUSION	
RH0	CENT	–95~+96	0	CENTER	
RH1	SKEW	–95~+96	0	SKEW	
RH2	BOW	–127~+127	0	BOW	
RH3	4BOW	–127~+127	0	4th BOW	
RH4	SIZE	–127~+127	25	SIZE	
RH5	LIN	–127~+127	10	LINEARITY	
RH6	MSIZ	–127~+127	30	MID SIZE	
RH7	MLIN	–127~+127	–30	MID LINEARITY	

Item Display	Adj Item	Data Range	Std Values	Register Name	Device
RH8	KEY	–127~+127	0	KEYSTONE	
RH9	SSKW	–127~+127	0	SUB SKEW	
RH10	MPIN	–127~+127	0	MID PINCUSION	
RH11	PIN	–127~+127	–10	PINCUSION	
RH12	SBOW	–127~+127	40	SUB BOW	
RH13	MBOW	–127~+127	12	MID BOW	
RH14	4PIN	–127~+127	0	4th PINCUSION	
RH15	4SBO	–127~+127	0	4th SUB BOW	
RV0	CENT	–95~+96	–10	CENTER	
RV1	SKEW	–95~+96	0	SKEW	
RV2	BOW	–127~+127	4	BOW	
RV3	SIZE	–127~+127	0	SIZE	
RV4	LIN	–127~+127	0	LINEARITY	
RV5	MSIZ	–127~+127	0	MID SIZE	
RV6	MKEY	–127~+127	10	MID KEYSTONE	
RV7	KEY KEYSTONE	–10	–10	–127±127	
RV8	SSKW	–127~+127	10	SUB SKEW	
RV9	MPIN	–127~+127	0	MID PINCUSION	
RV10	PIN PINCUSION	10	10	–127±127	
RV11	SBOW	–127~+127	16	SUB BOW	
RV12	WAE	–127~+127	30	WAVE	
RV13	4PIN	–127~+127	10	4th PINCUSION	
RV14	MWAVE	–31~+31	0	MID WAVE	
BH0	BSEL	0,1	0	OSD Select for BH, BV (0: B + G, 1: B + R)	
BH1	CENT	–95~+96	0	CENTER	
BH2	SKEW	–95~+96	0	SKEW	
BH3	BOW	–127~+127	0	BOW	
BH4	4BOW	–127~+127	0	4th BOW	
BH5	SIZE	–127~+127	–25	SIZE	
BH6	LIN	–127~+127	–10	LINEARITY	
BH7	MSIZ	–127~+127	30	MID SIZE	
BH8	MLIN	–127~+127	30	MID LINEARITY	
BH9	KEY	–127~+127	0	KEY KEYSTONE	
BH10	SSKW	–127~+127	0	SUB SKEW	
BH11	MPIN	–127~+127	0	MID PINCUSION	
BH12	PIN	–127~+127	–10	PINCUSION	
BH13	SBOW	–127~+127	–40	SUB BOW	
BH14	MBOW	–127~+127	–16	MID BOW	
BH15	4PIN	–127~+127	0	4PIN 4th PINCUSION	
BH16	4SBO	–127~+127	0	4th SUB BOW	
BV0	CENT	–95~+96	–10	CENTER	
BV1	SKEW	–95~+96	0	SKEW	
BV2	BOW	–127~+127	0	BOW	
BV3	SIZE	–127~+127	0	SIZE	
BV4	LIN	–127~+127	0	LINEARITY	
BV5	MSIZ	–127~+127	0	MID SIZE	
BV6	MKEY	–127~+127	–10	MID KEYSTONE	
BV7	KEY	–127~+127	10	KEYSTONE	
BV8	SSKW	–127~+127	–10	SUB SKEW	
BV9	MPIN	–127~+127	0	MID PINCUSION	
BV10	PIN	–127~+127	10	PINCUSION	
BV11	SBOW	–127~+127	32	SUB BOW	
BV12	WAVE	–127~+127	–30	WAVE	
BV13	4PIN	–127~+127	10	4th PINCUSION	
BV14	MWAVE	–31~+31	0	MID WAVE	
ACV0	ART0	1-8	6	DATA SAMPLE LENGTH	
ACV1	ATIM	0-255	1S	SAMPLE START TIME (UP)	

Item Display	Adj Item	Data Range	Std Values	Register Name	Device
ACV2	ATIM	0-255	132	SAMPLE START TIME (LSR)	
ACV3	ATIB	0-255	240	SAMPLE START TIME (BOT)	
ACV4	AH51	0-255	1S	OSD H POS 50 (L & R)	
ACV5	AH52	0-255	130	OSD H POS 50 (UP & BOTTOM)	
ACV6	AV5T	0-255	1	OSD V POS 50 (UP)	
ACV7	AV5M	0-255	60	OSD V POS 50 (L & R)	
ACV8	AV5B	0-255	130	OSD V POS 60 (BOTTOM)	
ACV9	AH61	0-255	18	OSD H POS 60 (L & R)	
ACV10	AH62	0-255	130	OSD H POS 60 (BOTTOM)	
ACV11	AV6T	0-255	1	OSD V POS 50 (UP)	
ACV12	AV6M	0-255	46	OSD V POS 50 (L & R)	
ACV13	AV6B	0-255	100	OSD V POS 50 (BUTTOM)	
ACV14	RHCO	–127~+127	0	RH CENT ADJ OFFSET	
ACV15	BHCO	–127~+127	0	BH CENT ADJ OFFSET	
ACV16	RCO	–127~+127	0	RV CENT ADJ OFFSET	
ACV17	BVCO	–127~+127	0	BV CENT ADJ OFFSET	
ACV18	RHSO	–127~+127	0	RH SKEW ADJ OFFSET	
ACV19	BHSO	–127~+127	0	BH SKEW ADJ OFFSET	
ACV20	RVSO	–127~+127	0	RV SKEW ADJ OFFSET	
ACV21	BVSO	–127~+127	0	BV SKEW ADJ OFFSET	
ACV22	AERR	0-255	0	AUTO CONV. ERROR CODE	
MSC0	ACTL	0-255	0	COUNTER (LOW BYTE)	
MSC1	ACTH	0-255	0	COUNTER (HIGH BYTE)	
0C	VAP	00~3F	2F	V ASPECT	CXA2050S
0D	VSC	00~3F	1F	V SCROLL	
0E	ULN	00~0F	00	UP V LINEARITY	
0F	LLN	00~0F	00	LOW V LINEARITY	
10	EHH	00~03	00	EHT-H	
11	EHV	00~03	00	EHT-V	
12	HBS	00~01	01	H BLK WID.ON/OFF	
13	LBK	00~0F	0F	L BLK WIDTH	
14	RBK	00~0F	0F	R BLK WIDTH	
15	JSW	00~01	00	JUMP ON/OFF SW	
16	VBW	00~03	02	V BLK WID.CON.	
17	AFC	00~03	01	AFC-MODE	
			03		
18	FHH	00~01	00	FH-HI	
19	VFQ	00~03	00	V-FREQ	
1A	VOF	00~01	00	V OFF	
1B	VMD	00~01	00	CD-MODE2	
1C	CMD	00~01	00	CD-MODE	
1D	TTL	00~03	00	INTERLACE	
1E	ZSW	00~01	00	ZOOM SW	
1F	POV	00~03	03	PRE-OVER	
20	CT1	00~01	01	C-TRAP(NTSC)	
21	CT2	00~01	01	C-TRAP(PAL)	
22	CFO	00~0F	07	C-TRAP fo ADJ	
23	SFO	00~01	00	SHARPNESS fo ADJ	
24	TOT	00~01	01	TOT FILTER SW	
25	CSW	00~03	00	COLOR SW	
26	XTL	00~03	00	XTAL	
			00		
27	CV1	00~01	01	CV/YC SEL(NTSC)	
28	CV2	00~01	01	CV/YC SEL(PAL)	
29	VM	00~01	01	VM ON/OFF	
2A	YVM	00~01	00	YS1/VM SW(0:YS1)	
2B	DPC	00~01	01	D-PIC ON/OFF	

Item Display	Adj Item	Data Range	Std Values	Register Name	Device
2C	DCO	00~01	01	DYNAMIC COLOR	
2D	GMM	00~03	01	GAMMA	
2E	DTR	00~01	01	DC-TRANSIENT	
2F	DL1	00~07	03	DELAY CTRL(PAL)	
			03		
30	DL2	00~07	03	DELAY CTRL(NTSC)	
			03		
31	DL3	00~07	03	DELAY CTRL(SECAM)	
			03		
32	DL4	00~07	07	DELAY AT DVD(50Hz)	
33	DL5	00~07	07	DELAY AT DVD(60Hz)	
34	SCN	00~0F	09	SUB-CONTRAST	
35	SC1	00~0F	0B	SUB-COLOR(OTHER)	
36	SC2	00~0F	0B	SUB-COLOR(NTSC)	
37	SH1	00~0F	04	SUB-HUE(TV)	
38	SH2	00~0F	07	SUB-HUE(VIDEO)	
39	SBR	00~3F	24	SUB-BRIGHT	
3A	SSH	00~07	04	SUB-SHARPNESS	
			02		
3B	GDR	00~3F	1D	G-DRIVE	
3C	BDR	00~3F	20	B-DRIVE	
3D	GCF	00~0F	07	G-CUTOFF	
3E	BCF	00~0F	08	B-CUTOFF	
3F	RPO	00~03	01	0F[0..1]	
			02		
40	PON	00~01	01	PIC-ON	
41	RON	00~01	01	R ON	
42	GON	00~01	01	G ON	
43	BON	00~01	01	B ON	
44	AKF	00~01	00	AKB ON/OFF SW	
45	ESY	00~01	00	EXT SYNC SEL	
			00		
46	AGG	00~01	00	AGING MODE ON/OFF	
47	ABL	00~01	00	ABL PIC/PICandBRT SW (1:PIC ONLY)	
48	LIM	00~01	00	RGB LIMIT ON/OFF (1:ON)	
49	PB	00~01	01	PICTURE BOOSTER	No use
4A	BOF	00~01	01	BLACK OFFSET	
4B	UVG	00~3F	1F	USER VAR.GAMMA	
4C	ADG	00~3F	1F	ADAPTIVE GAMMA	
4D	NLA	00~3F	05	NON-LINEAR AMP	
4E	WDS	00~02	00	WINDOW SELECT	
4F	LST	00~0F	07	WINDOW LINE START	
50	LSP	00~0F	07	WINDOW LINE STOP	
51	FST	00~0F	07	WINDOW FIELD START	
52	FSP	00~0F	07	WINDOW FIELD STOP	
53	VA	00~01	01	V APERTURE ON/OFF	No use
54	VAW	00~03	02	V APERTURE WHITE	
55	VAB	00~03	02	V APERTURE BLACK	
56	VAC	00~0F	02	V APERTURE CORE	
57	SHP	00~3F	25	SHARPNESS	No use
			20		
58	VMH	00~3F	29	VM LIMITTER(HIGH)	
59	VML	00~3F	1C	VM LIMITTER(LOW)	

Item Display	Adj Item	Data Range	Std Values	Register Name	Device
5A	COR	00~3F	1C	CORING	
			1C		
5B	DOF	00~3F	15	DSC OFFSET	
5C	DGA	00~3F	1F	DSC GAIN	
5D	DLT	00~01	01	DELAY TIME	
5E	SDL	00~0F	00	SEL PIN DELAY	SDA9189X
5F	POH	00~FF	1B	H POSITION(MSB 8bit)	
60	POV	00~FF	2F	V POSITION	
61	HDL	00~1F	0B	HSI DELAY	
62	AMS	00~01	00	DECIMATION FILTER	
63	VDL	00~1F	0B	VSI DELAY	
64	VSP	00~1F	0D	VSP DELAY	
65	CON	00~0F	06	CONTRAST	
66	FRY	00~0F	09	FRAME Y	
67	FRV	00~0F	00	FRAME V	
68	FRU	00~0F	00	FRAME U	
69	INF	00~01	01	INNER FRAME	
6A	FWV	00~03	02	FRAME WIDTH V	
6B	FWH	00~07	07	FRAME WIDTH H	
6C	PLL	00~03	02	PLL LOOP FILTER	
6D	PDV	00~0F	00	PEDESTAL V	
6E	PDU	00~0F	00	PEDESTAL U	
6F	DAT	00~01	00	DAC STREAM CONTROL	
70	DAN	00~01	00	DAC CONTROL	
71	FAW	00~FF	08	NICAM FAW THRESH	MSP3410
72	CTM	00~FF	08	NICAM ERROR BIT(MONO)	
73	CTN	00~FF	50	NICAM ERROR BIT(NICAM)	
74	WCD	00~FF	0A	W.G.DATA CHANGE	
75	WST	00~FF	15	W.G.STEREO THRESHOLD	
76	WTM	00~FF	50	W.G.TIMER	
77	WBT	00~01	EA	W.G.BILINGUAL THRESHOLD	
78	AGC	00~01	01	AGC AUTO/CONST	
79	CDB	00~3F	28	AGC GAIN CONST	
7A	FGP	00~7F	24	FM(BG,I,DK)PRESCALE	
7B	EMP	00~7F	40	FM(M)PRESCALE	
7C	WGP	00~7F	3C	W.G PRESCALE	
7D	NIP	00~7F	7F	NICAM PRESCALE	
7E	CRM	00~01	00	CARRIER MUTE	
7F	CML	00~03	00	CARRIER MUTE LEVEL	
80	ACO	00~01	01	AUDIO CLOCK OUT	
81	WAC	00~0F	01	W.G.AGREEMENT COUNT	
82	DLY	00~FF	30	STEREO SEARCH DELAY	
83	DLG	00~FF	10	W.G.SEARCH DELAY	
84	TXP	00~0F	0E	TEXT PICTURE CONT	SAA5261
85	MXP	00~0F	0F	TEXT MIX MODE PIC	
86	TXH	00~03	02	TEXT DISPLAY POSITION(H)	
87	BB1	00~3F	1D	BBE CONTROL HIGH	CXA1315
88	BB2	00~3F	1D	BBE CONTROL MIDDLE	
89	BB3	00~3F	28	BBE CONTROL LOW	
8A	ATW	00~03	01	AUTO WIDE IDENTSPEED	No use
8B	BKP	00~FF	00	BLK OFF PICTURE	No use
8C	OSH	00~3F	0D	OSD POSITION H	
8D	ODL	00~FF	10	POWER ON DELAY	
8E	BLU	00~01	01	BLUE BACK ON/OFF	
8F	ROC	00~0F	0F	N/S CENTER VOL	

Note: Items are fixed data.

Item Display	Adj Item	Data Range	Std Values	Register Name	Device
90	ROS	00~07	07	USER SET UP	
91	DKS	00~01	01	D/K STEREO SEARCH	
92	MUT	00~01	01	NO SYNC MUTE	
93	DID	00~01	00	DISABLE DEGAUSS	
94	DWZ	00~01	00	DISABLE WIDEZOOM	
95	BCS	00~01	00	BASS CENTER SHIFT	
96	RVS	00~01	00	BASS VOLUME SHIFT	
97	WBS	00~03	00	WOOFER OFF BASS SHIFT	
98	OP0	00~FF	C1	OPTION 0	
99	OP1	00~FF	3E	OPTION 1	

Note: Items are fixed data.

ITEM INFORMATION

No.98 OP 0

ITEM	MSP RST	H.D. M	—	—	—	—	—	Text Mode
Normal	0	0	0	0	0	0	0	1

bit 0 0: Automatic mode 1: Fastext mode
bit 6 0: High Deviation mode Disable 1: High Deviation mode Enable
bit 7 0: Off 1: On

No.99 OP 1

ITEM	WIDE	WOOFER	TILT	VM	COMB ELECT	COMB	SECAM	B/G ONLY
Normal	0	0	1	1	1	1	1	0

E: Tilt, Digital comb, SECAM decoder
V: Wide, Tilt, Digital comb, SECAM decoder
J: Tilt, Grass comb, VM, SECAM decoder

bit3 0: Grass comb 1: Digital comb
bit2 0: comb OFF 1: comb ON

5-4. REGISTRATION (CONVERGENCE) ADJUSTMENT METHOD

PAL REGISTRATION ADJUSTMENT

1) Receive the PAL SPCB signal.
2) Select Service mode and enter adjustment items for Green signal.

CENTER ADJUSTMENT

1) Adjust GH and GV CENT.

GV CENT

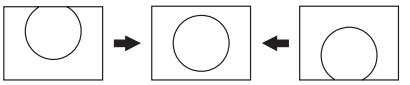

GH CENT

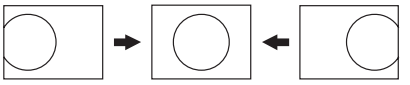

SIZE ADJUSTMENT

1) Adjust GH SIZE data " 0 ".
2) Adjust VSP H-SIZE.
3) Make GV SIZE data " 00 ".
4) Adjust VSP V-SIZE.
5) Adjust VSP SSCOR.

SPEC : H-SIZE 16.4 +/- 0.15 Sq.
V-SIZE 12.3 +/-0.15Sq.

VSP HSIZE

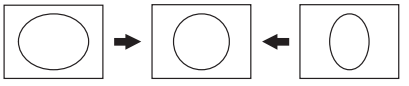

VSP VSIZE

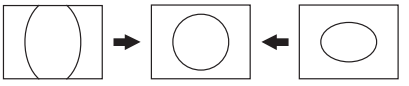

MAIN DEFLECTION ADJUSTMENT

1) Adjust VSP V-Lin.
Correct linearity of the horizontal top and bottom lines.

VSP VLINE

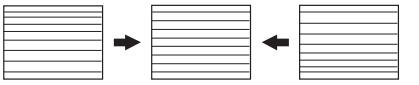

2) Adjust VSP H-SKEW
Correct the vertical center line to be in parailel with the screen edges and other colors.

VSP H-SKEW

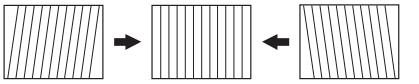

3) Adjust VSP H-BOW.
Correct linearity of the vertical center line.

VSP H-BOW

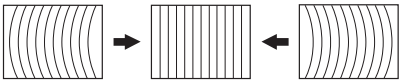

4) Adjust VSP H-PIN.
Correct the vertical left and right lines and eliminute pin-cushion-shaped distortion.

VSP H-PIN

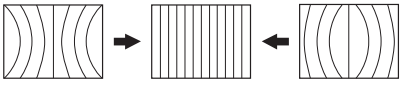

5) Adjust VSP H-Key.
Correct the vertical left and right lines to be in parallel with each other.

VSP H-KEY

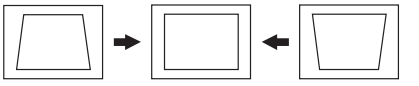

6) Adjust VSP UC. PIN
Correct the screen top section line bow.

VSP UC. PIN

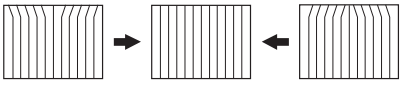

7) Adjust VSP LC. PIN
Correct the screen bottom section line bow.

VSP LC. PIN

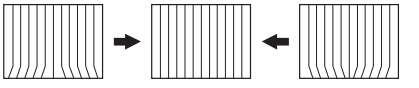

SUB DEFLECTION ADJUSTMENT ITEM

Adjustment O : Yes – : No

Display	Adjustment item	Adjustment type					
		GH	GV	RH	RV	BH	BV
BSEL	COL SELECT	–	–	–	–	O	–
CENT	CENT	O	O	O	O	O	O
SKEW	SKEW	O	O	O	O	O	O
BOW	BOW	O	O	O	O	O	O
4BOW	4TH BOW	O	–	O	–	O	–
SIZE	SIZE	O	O	O	O	O	O
LIN	LIN	O	O	O	O	O	O
MSIZ	MID SIZE	O	O	O	O	O	O
MLIN	MID LIN	O	O	O	–	O	–
MKEY	MID KEY	–	O	–	O	–	O
KEY	KEY	O	O	O	O	O	O
SSKW	SUB SKEW	O	O	O	O	O	O
MPIN	MID PIN	O	O	O	O	O	O
PIN	PIN	O	O	O	O	O	O
SBOW	SUB BOW	O	O	O	O	O	O
WAVE	WAVE	–	O	–	O	–	O
MBOW	MID BOW	O	–	O	–	O	–
4PIN	4TH PIN	O	O	O	O	O	O
4SBOW	4TH SUB BOW	O	–	O	–	O	–

VERTICAL LINE ADJUSTMENT

1. Carefully watching out for the GH CENT screen centre section, adjust GH CENT, GH BOW, GH SKEW.
2. GH 4th Bow adjustment. Correct the corner distortion which could not be adjusted with GH BOW.

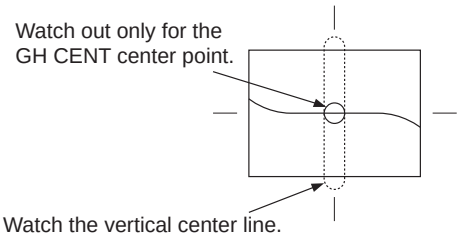

GH CENT

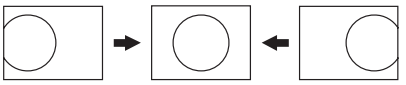

GH BOW

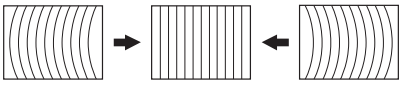

GH SKEW

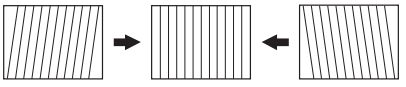

GH 4BOW

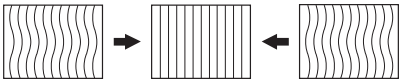

HORIZONTAL LINE ADJUSTMENT

1. Finely adjust the centre position of the vertical line at the centre of the screen with GV CENT.
2. Using GV SKEW and GV BOW, correct the tilt and bow of the horizontal line at the centre of the screen.

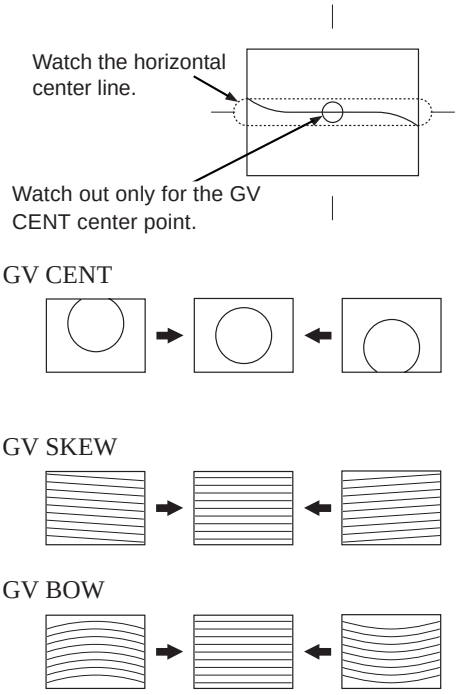

SIZE AND LINEARITY ADJUSTMENT

1. Balance the sizes at both sides of the centre section of the screen with GH MLIN.
2. Balance the sizes on both end sections of the screen with GH LIN.
3. While tracking, adjust with GH MLIN and GH LIN so that the sizes of the horizontal line at the centre of the screen are symmetrical left and right.

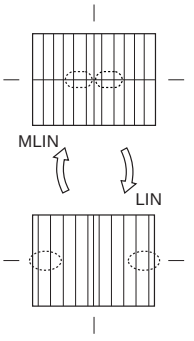

HORIZONTAL SIZE ADJUSTMENT

1. Adjust with GH MSIZE, so that the sizes of both edges and centre are equal.
2. Adjust with GH SIZE, so that the horizontal sizes of both edges and centre are equal.
3. While tracking adjust GH MSIZE and GH SIZE so that the space intervals for the horizontal section of the screen are equal.
4. Adjust again if M LIN is changed after GH MSIZE and GH SIZE are complete.

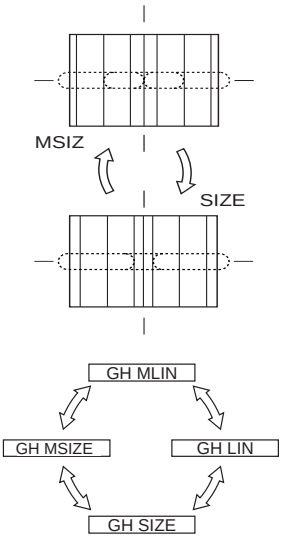

GREEN VERTICAL LINEARITY ADJUSTMENT

1. Adjust GV LIN so that the vertical lines at the top and bottom of the screen are symmetrical.

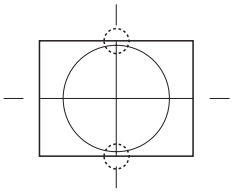

GREEN VERTICAL SIZE ADJUSTMENT

1. Adjust GV MSIZE so that the sizes at the top and bottom and centre are equal.
2. Set the vertical size to correct specification.
3. While tracking adjust GV MSIZE and GV SIZE so that the space intervals for the vertical line of the screen are equal, also the vertical size should be within space.
4. Adjust again if GV LIN has been altered after completing the above adjustments.

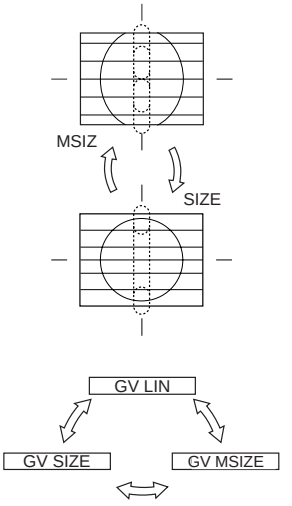

GREEN HORIZONTAL TRAPEZOIDAL DISTORTION ADJUSTMENT

1. Adjust GH SSKW so that the tilt of the vertical lines at both edges of the screen are symmetrical left and right.
2. Adjust GH KEY so that there is no tilt in the vertical lines at both edges of the screen.
3. While tracking adjust GH KEY and GH SSKW.

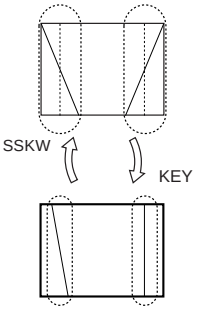

GREEN HORIZONTAL QUATERNARY ADJUSTMENT

1. Adjust GH 4PIN, to correct the 4th order distortion.
2. Adjust GH 4SBO to balance and correct the 4th order distortion at both edges of the screen.
3. While tracking adjust GH 4PIN and GH 4SBOW.

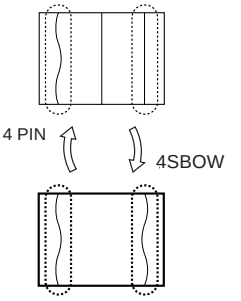

GREEN HORIZONTAL ASYMMETRICAL PIN DISTORTION ADJUSTMENT

1. Adjust GH MBOW, so that the pin asymmetry at both sides of the centre section are symmetrical left and right.
2. Adjust GH SBOW so that the bow at both edges of the screen is symmetrical left and right.
3. While tracking adjust GH MBOW and GH SBOW so that the bow of vertical lines over the entire screen is symmetrical.

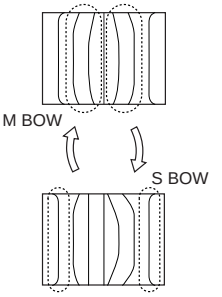

GREEN HORIZONTAL SYMMETRICAL PIN DISTORTION ADJUSTMENT

1. Adjust GH MPIN to correct pin distorton at both edges of the centre section.
2. Use GH PIN to correct pin distortion at both edges of the screen.
3. While tracking adjust GH MPIN and GH PIN so that the PIN of vertical lines on the entire screen have no bowing.
4. If there is asymmetrical distortion after adjustments, re-adjust GH MBOW and GH SBOW while tracking.

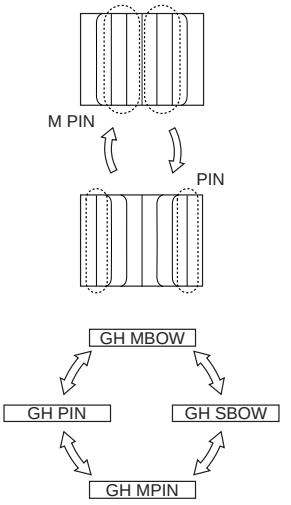

GREEN VERTICAL WAVE (3RD-ORDER) DISTORTION ADJUSTMENT

1. Check the screen at the top & bottom, and look for any 2nd or 3rd order waveform distortion of horizontal lines. Correct with GV WAVE.
2. While tracking adjust GV WAVE and GV KEY, if here are any KEY distortion.

GV WAVE

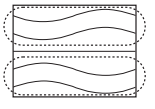

GV KEY

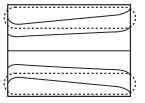

GREEN VERTICAL 4TH ORDER DISTORTION ADJUSTMENT

1. By using GV 4 PIN, 4th-Order distortion of the horizontal lines at the top & bottom can be corrected.
   Since there is no 4SBO for vertical correction, there will be a slight imbalnace, but adjust the registration to eleiminate any distortion.

GV 4PIN

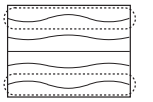

GREEN VERTICAL TRAPEZOIDAL DISTORTION ADJUSTMENT

1. Adjust GV SSKW so that the tilt of the horizontal lines at the top and bottom of the screen are symmetrical.
2. Adjust GV MKEY so that there is no tilt for the middle section.
3. Adjust GV KEY so that there is no tilt at the top and bottom of the screen.
4. While tracking adjust GV MKEY and GV KEY, so that there is no tilt over the entire screen.
5. If the tilt is unbalanced after GV MKEY and GV KEY have been adjusted, readjust GV SSKW.

GV SSKW

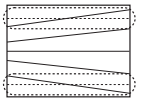

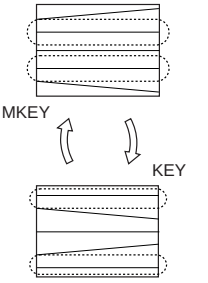

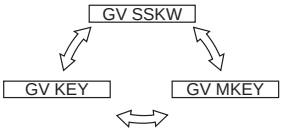

GREEN VERTICAL ASYMMETRICAL PIN DISTORTION (2ND-ORDER DISTORTION) ADJUSTMENT

1. Correct the asymmetrical pin distortion at the top and bottom of the screen with GV SBOW.

GV SBOW

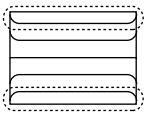

GREEN VERTICAL ASYMMETRICAL PIN DISTORTION ADJUSTMENT

1. Using GV MPIN adjust the pin distortion at both edges of the screen and at the centre.
2. Using GV PIN, adjust, so that the horizontal lines at the top & bottom of the screen are straight lines.
3. Adjust GV MPIN & GV PIN so that there is no curve in the horizontal lines on the entire screen.
4. After adjusting the items above, using tracking with GV SBOW. GV MPIN, and GV PIN to correct the entire screen.

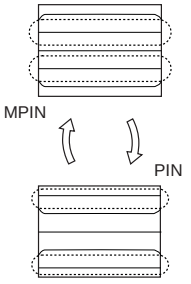

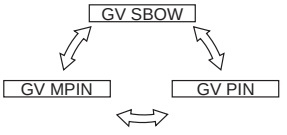

GREEN AND RED REGISTRATION ADJUSTMENT

1. Receive a PAL cross-hatch signal.
2. Adjust so that the red lines lay on the green lines.
   Adjust, using the same procedure as the GREEN SUB adjustment outline above.

Note : Main registration correction should not be while adjusting Red adjustment.

BEWARE : Not to change Green Sub Items It' s easily done by mistake.

GREEN AND BLUE ADJUSTMENT

1. Adjust so that the blue and green lines are on top of each other.

Note : Main registration correction should not be while adjusting Blue adjustment.

BEWARE : Not to change Green & Red Sub Items. It' s easily done by mistake.

REGISTRATION DATA WRITE

After Finish all PAL registration adjustments, write PAL registration data by pressing form the appropriate buttons.

DATA WRITE
Press MUTE +0

DATA COPY FROM PAL TO NTSC

Copy PAL data to NTSC data by pressing " DISPLAY " and " 0 "

* Press " i+ (DISPLAY) " + " 0 " to copy data from PAL to NTSC.
  If you press " i+ (DISPLAY) ", then it appears " WRT5060 " to display.
* Make sure input signal is PAL. If input signal is NTSC and do this process, NTSC data are copied to PAL data!

5-5. AUTO CONVERGENCE ADJUSTMENT

1. Enter service mode.
2. Confirm registration is well adjusted (especially center).
3. Push "Quick Focus" (Auto Convergence) button in the control panel.
4. If, Auto Convergence is successfully finished, then OK.
5. If not, please check the connection of the photo sensor and it's harness.

5-6. WHITE BALANCE ADJUSTMENT

1. Receive the monoscope signal and adjust the picture quality with the menu.
2. Adjust service mode S-BRIGHT so that the signal 10 IRE section barely glows.
3. Receive the all-white pattern signal.
4. Adjust the white balance with service mode G-CUTOFF and B-CUTOFF.
5. Adjust service mode S-BRIGHT so that the signal 100 IRE section barely glows.
6. Adjust the white balance with service mode G-DRIVE and B-DRIVE.
7. Repeatedly adjust the white balance for the minimum and maximum picture settings.

5-7. TEXT POSITION ADJUSTMENT

1. Receive RF signal with text.
2. Select item 86 (TXH) Text H position adjustment by commander.
3. Adjust H Position of Text.

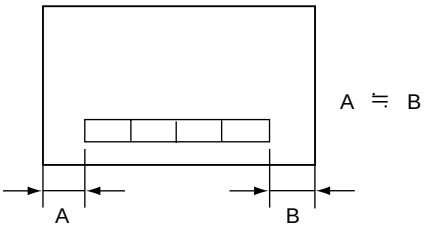

5-8. PICTURE QUALITY ADJUSTMENTS

SUB COLOR ADJUSTMENT (SC1, SC2)

1. Input a PAL color-bar.
2. Set to the following condition:
   PICTURE 90%, BRIGHTNESS 50%, COLOR 50%
3. Connect an oscilloscope to the pin ④ (B OUT) of CN405, AG board.
4. Set to Service Mode and select 35 SC1 with [1] and [4] of the commander then adjust to VB2=VB3=VB4 with [3] and [6].
5. Press [MUTING] → [0] of the commander to write the data.
6. Adjust 36 SC2 as step 2 to 5 when receiving NTSC color-bar.

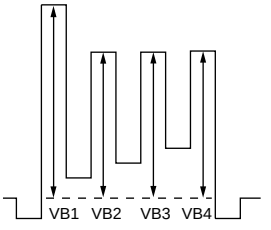

VB2 = VB3 = VB4

SUB HUE ADJUSTMENT (SH1, SH2)

1. Input a PAL color-bar.
2. Set the following condition:
   PICTURE 90%, BRIGHTNESS 50%, COLOR 50%.
3. Connect an oscilloscope to the pin ④ (B OUT) of CN405, AG board.
4. Select 37 SH1 with [1] and [4] of the commander by setting to Service Mode and adjust to VB1=VB2=VB3=VB4 with [3] and [6].
5. Select Video1.

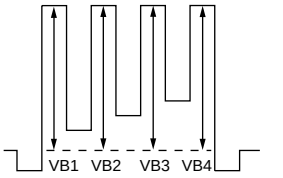

VB1 = VB2 = VB3 = VB4

6. Input a PAL color-bar, video into video 1.
7. Adjust 38 SH2 as step 2 to 5.
8. Press [MUTING] → [0] of the commander to write the data.

KP-EF41HK2/ME2/MN2/SN2, EF48HK2/ME2/MN2/SN2, EF53HK2/ME2/MN2/SN2 RM-871

KP-EF41HK2/ME2/MN2/SN2, EF48HK2/ME2/MN2/SN2, EF53HK2/ME2/MN2/SN2 RM-871

SECTION 6
DIAGRAMS

6-1. BLOCK DIAGRAMS

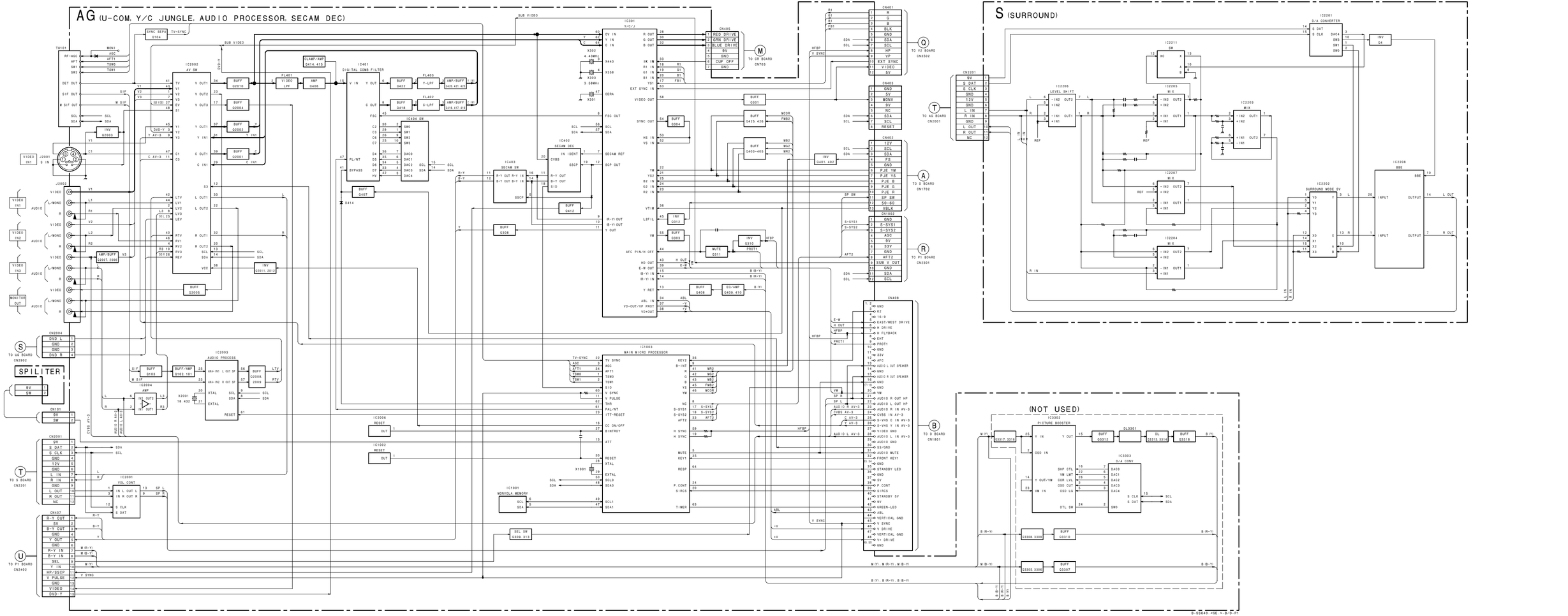

KP-EF41HK2/ME2/MN2/SN2, EF48HK2/ME2/MN2/SN2,
EF53HK2/ME2/MN2/SN2 RM-871

KP-EF41HK2/ME2/MN2/SN2, EF48HK2/ME2/MN2/SN2,
EF53HK2/ME2/MN2/SN2 RM-871

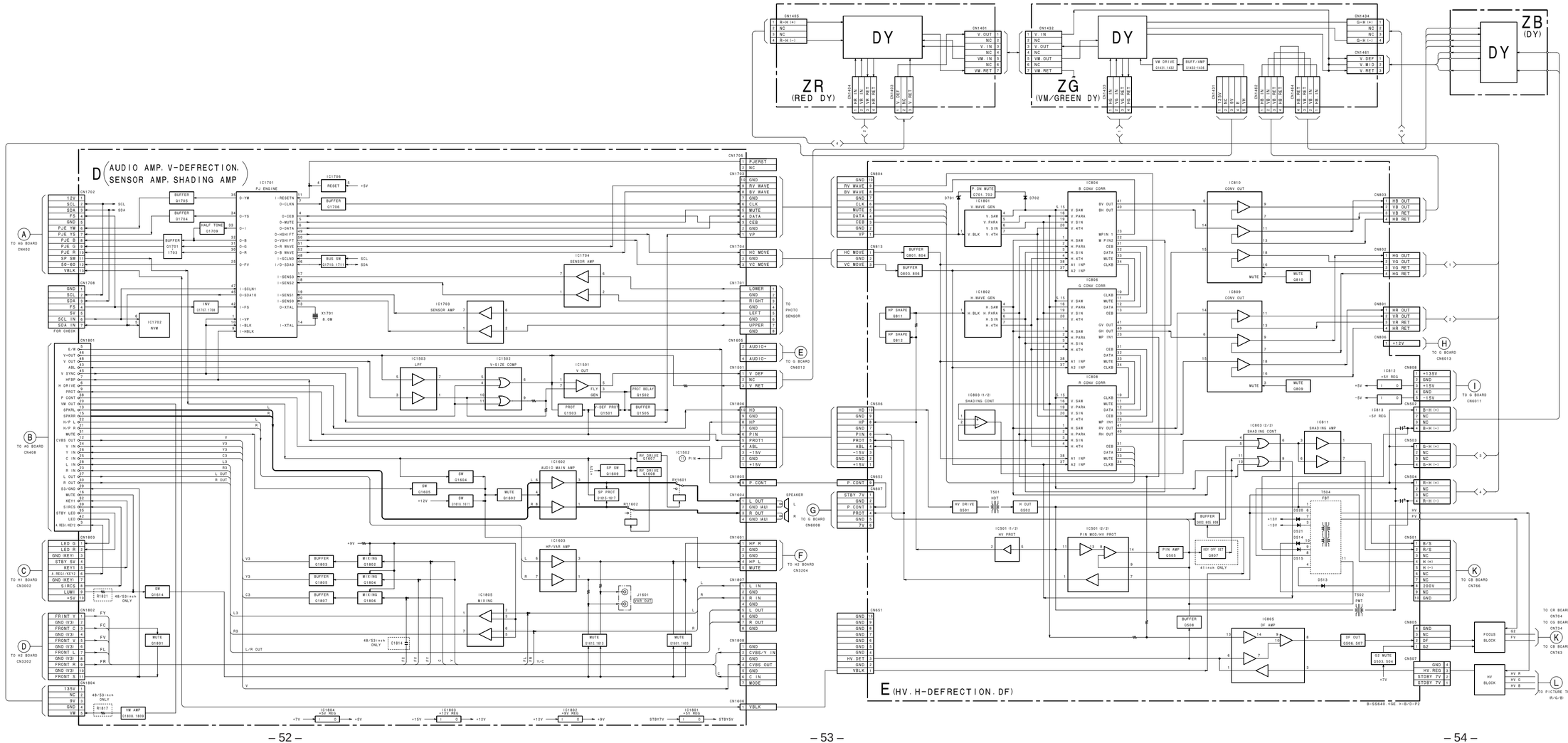

KP-EF41HK2/ME2/MN2/SN2, EF48HK2/ME2/MN2/SN2,
EF53HK2/ME2/MN2/SN2 RM-871

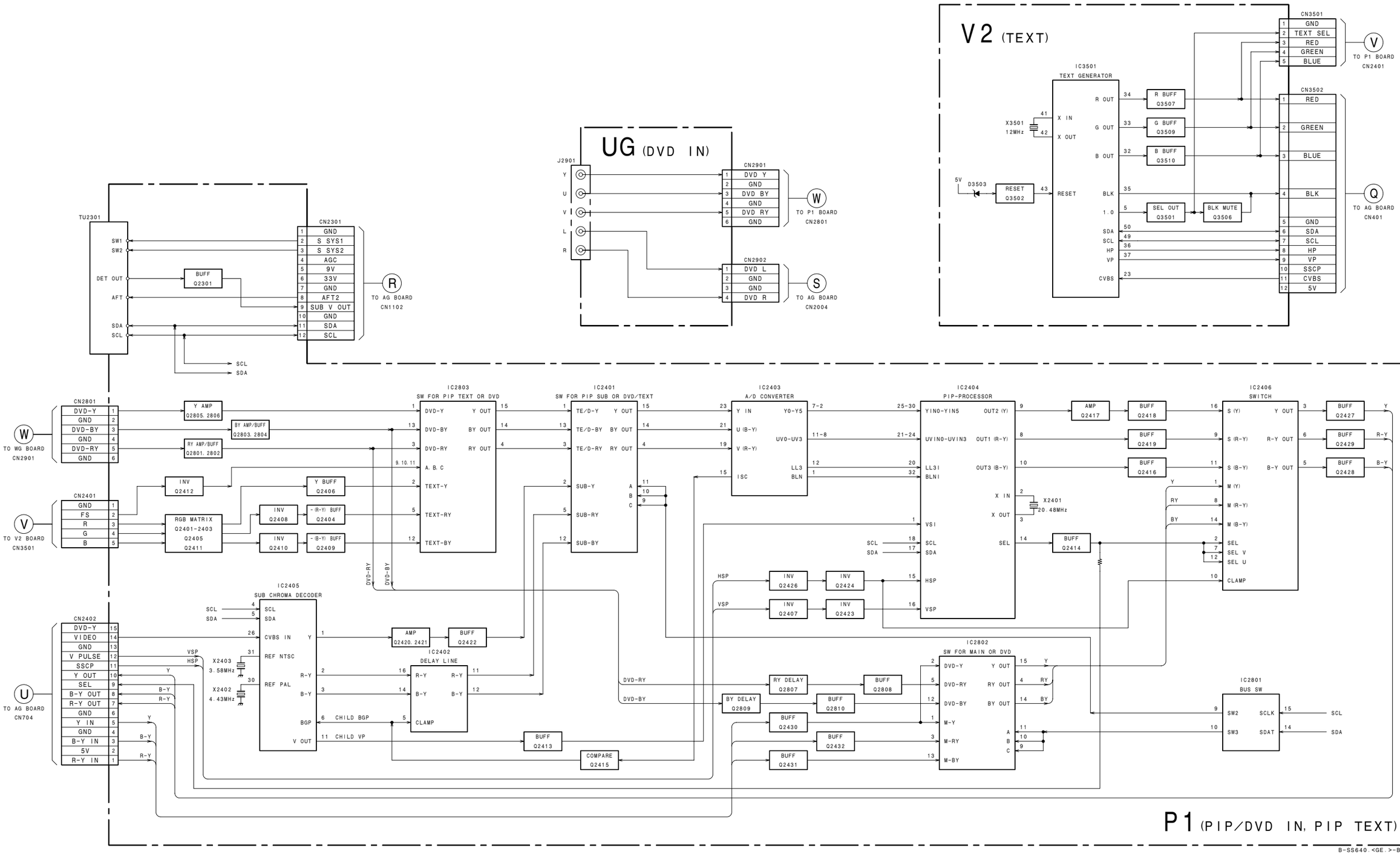

KP-EF41HK2/ME2/MN2/SN2, EF48HK2/ME2/MN2/SN2,
EF53HK2/ME2/MN2/SN2 RM-871

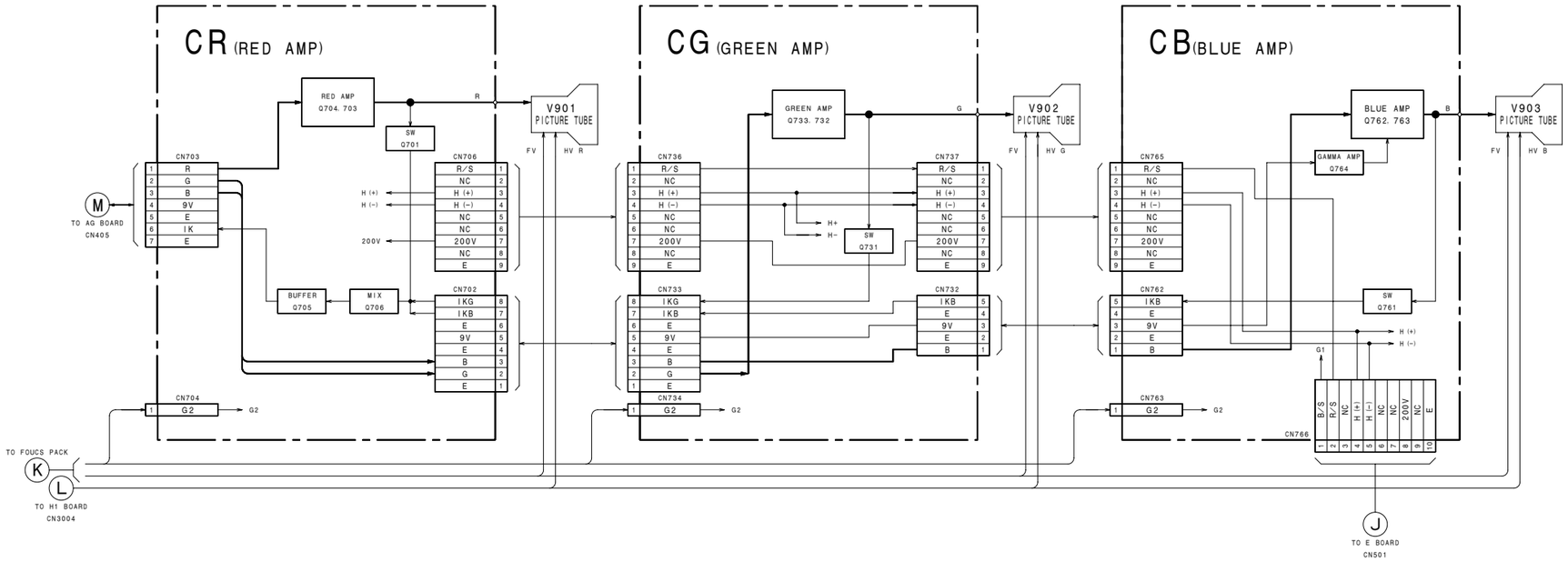

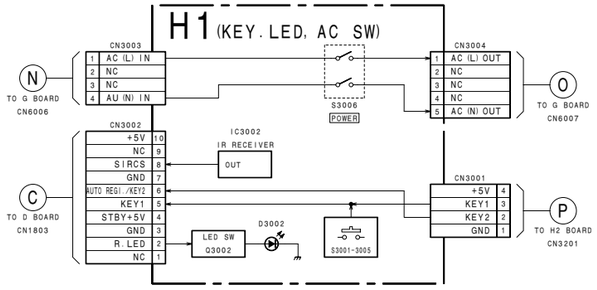

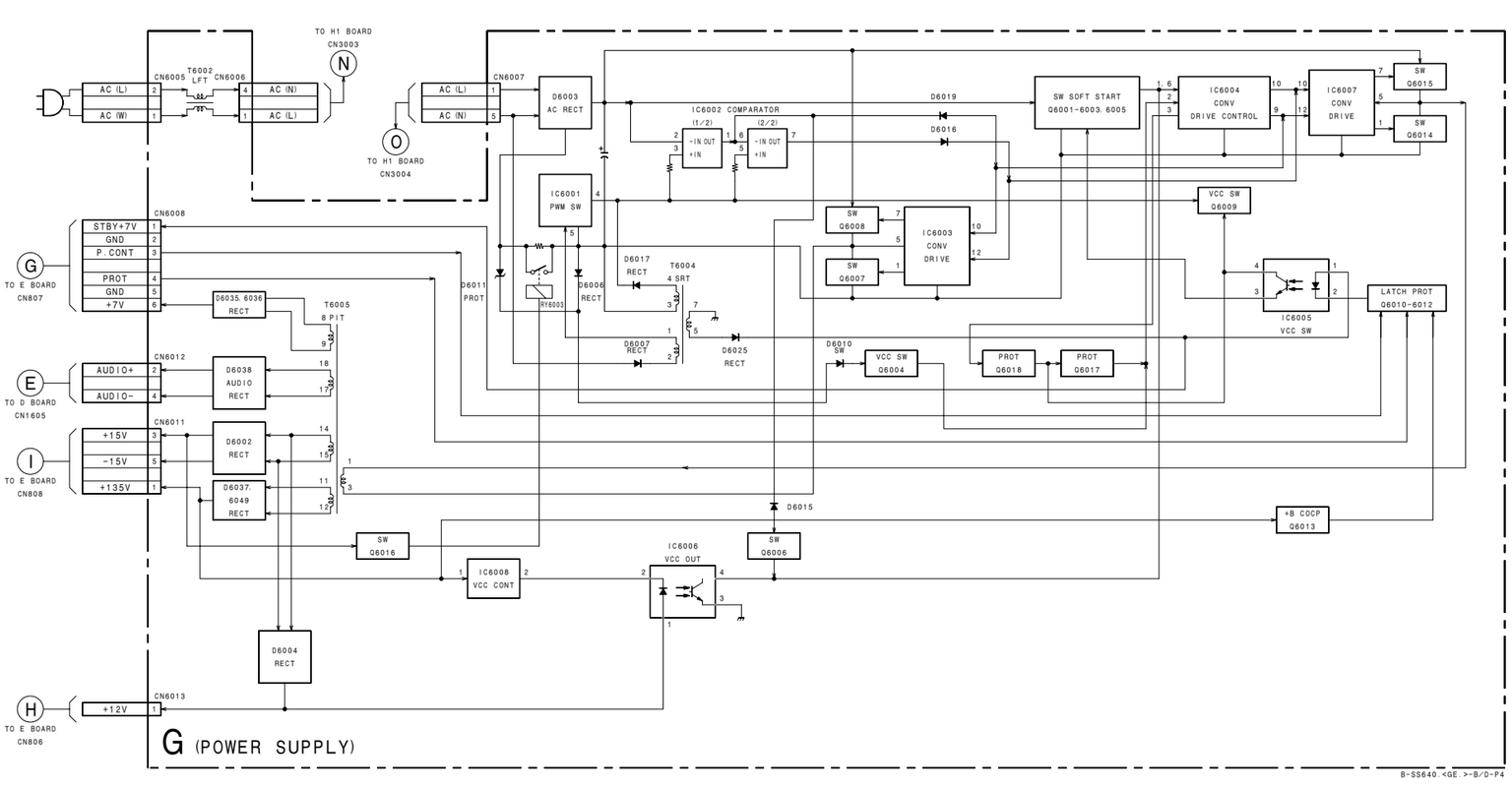

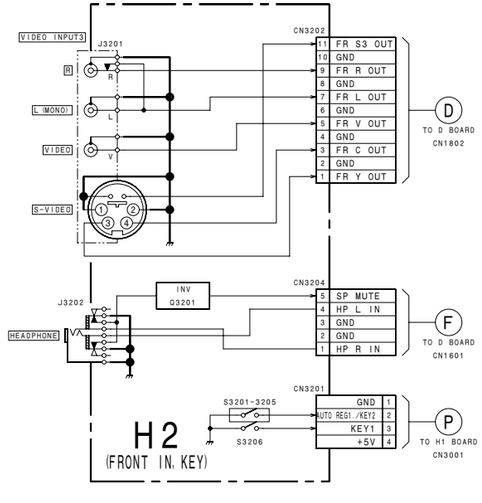

6-2. FRAME SCHEMATIC DIAGRAM

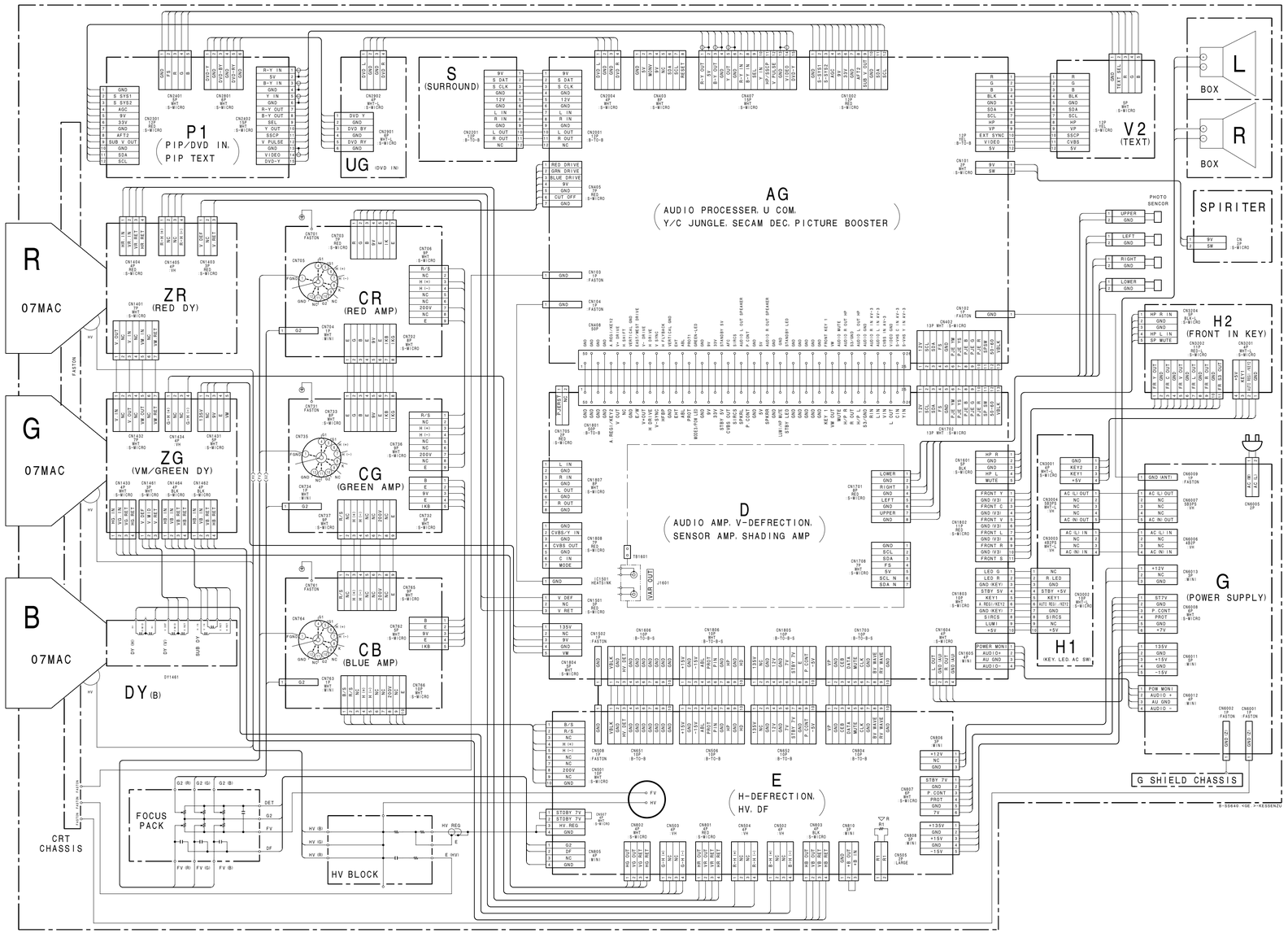

6-3. CIRCUIT BOARDS LOCATION

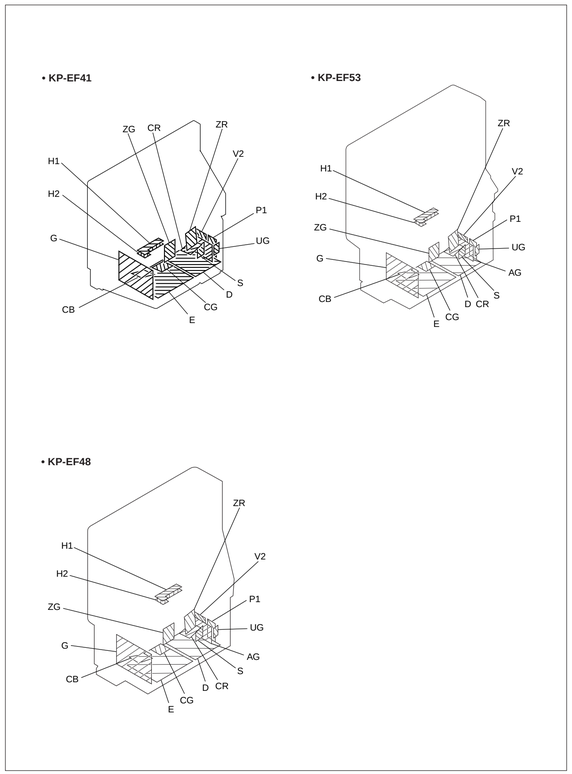

6-4. SCHEMATIC DIAGRAMS AND PRINTED WIRING BOARDS

Note:

- All capacitors are in µF unless otherwise noted. (pF: µµF) Capacitors without voltage indication are all 50 V.
- Indication of resistance, which does not have one for rating electrical power, is as follows.

  Pitch: 5 mm
  Rating electrical power 1/4 W (CHIP : 1/10 W)

- All resistors are in ohms.
- : nonflammable resistor.
- : fusible resistor.
- : internal component.
- : panel designation, and adjustment for repair.
- All variable and adjustable resistors have characteristic curve B, unless otherwise noted.
- : earth-ground.
- : earth-chassis.
- All voltages are in V.
- Readings are taken with a 10 M digital multimeter.
- Readings are taken with a color-bar signal input.
- Voltage variations may be noted due to normal production tolerances.
- ∗ : Can not be measured.
- NO MARK: Common
- < > : SECAM
- ( ) : NTSC 3.58 MHz
- Circled numbers are waveform references.
- : B + bus.
- : B – bus.
- : Signal path.

Reference information

RESISTOR	: RN	METAL FILM
	: RC	SOLID
	: FPRD	NONFLAMMABLE CARBON
	: FUSE	NONFLAMMABLE FUSIBLE
	: RW	NONFLAMMABLE WIREWOUND
	: RS	NONFLAMMABLE METAL OXIDE
	: RB	NONFLAMMABLE CEMENT
COIL	: LF-8L	MICRO INDUCTOR
CAPACITOR	: TA	TANTALUM
	: PS	STYROL
	: PP	POLYPROPYLENE
	: PT	MYLAR
	: MPS	METALIZED POLYESTER
	: MPP	METALIZED POLYPROPYLENE
	: ALB	BIPOLAR
	: ALT	HIGH TEMPERATURE
	: ALR	HIGH RIPPLE

Note: The components identified by shading and mark ⚠ are critical for safety. Replace only with part number specified.

Terminal name of semiconductors in silk screen printed circuit (∗)

	Device	Printed symbol	Terminal name	Circuit
①	Transistor	T	Collector / Base / Emitter	
②	Transistor	—	Collector / Base / Emitter	
③	Diode		Cathode / Anode	
④	Diode	T	Cathode / Anode (NC)	
⑤	Diode	—	Cathode / Anode (NC)	
⑥	Diode	T	Common / Anode Cathode	
⑦	Diode	—	Common / Anode Cathode	
⑧	Diode	T	Common / Anode Anode	
⑨	Diode	—	Common / Anode Anode	
⑩	Diode	T	Common / Cathode Cathode	
⑪	Diode	—	Common / Cathode Cathode	
⑫	Diode	|	Anode Anode Cathode / Cathode Anode Anode	
⑬	Transistor (FET)	|	Drain / Source Gate	
⑭	Transistor (FET)	⊢	Drain / Source Gate	
⑮	Transistor (FET)	|	Source / Drain / Gate	
⑯	Transistor	|	Emitter / Collector / Base	
⑰	Transistor	—	C1B1E1 / E2B2C2	
⑱	Transistor	—	C1B2E2 / E1B1C2	
⑲	Transistor	—	C1 B2 E2 / E1 B1 C2	
⑳	Transistor	—	C1 B2 E2 / E1 B1 C2	
㉑	Transistor	—	E2 B1 E1 / C2 C1B2	
㉒	Transistor	—	B2 / B1 E2 E1 / C2 C1	
㉓	Transistor	—	B2 / B1 E2 E1 / C2 C1	
–	Discrete semiconductot			

(Chip semiconductors that are not actually used are included.)

ver.1.5

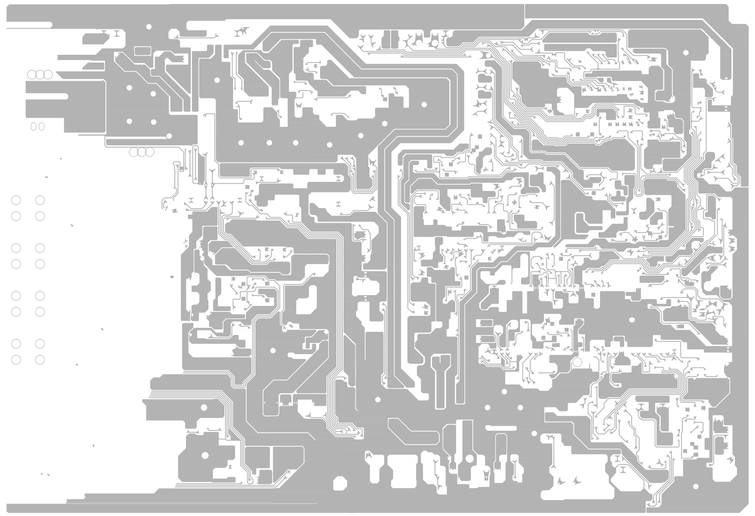

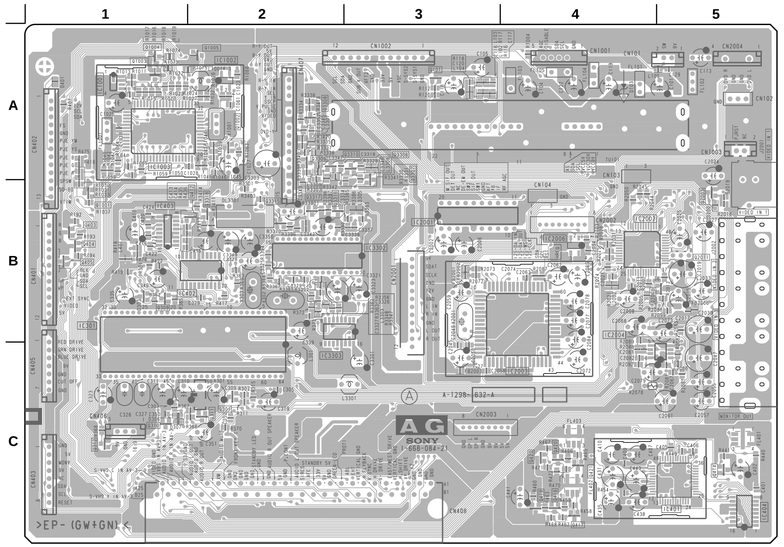

(1) Schematic Diagram of AG (1/3) Board

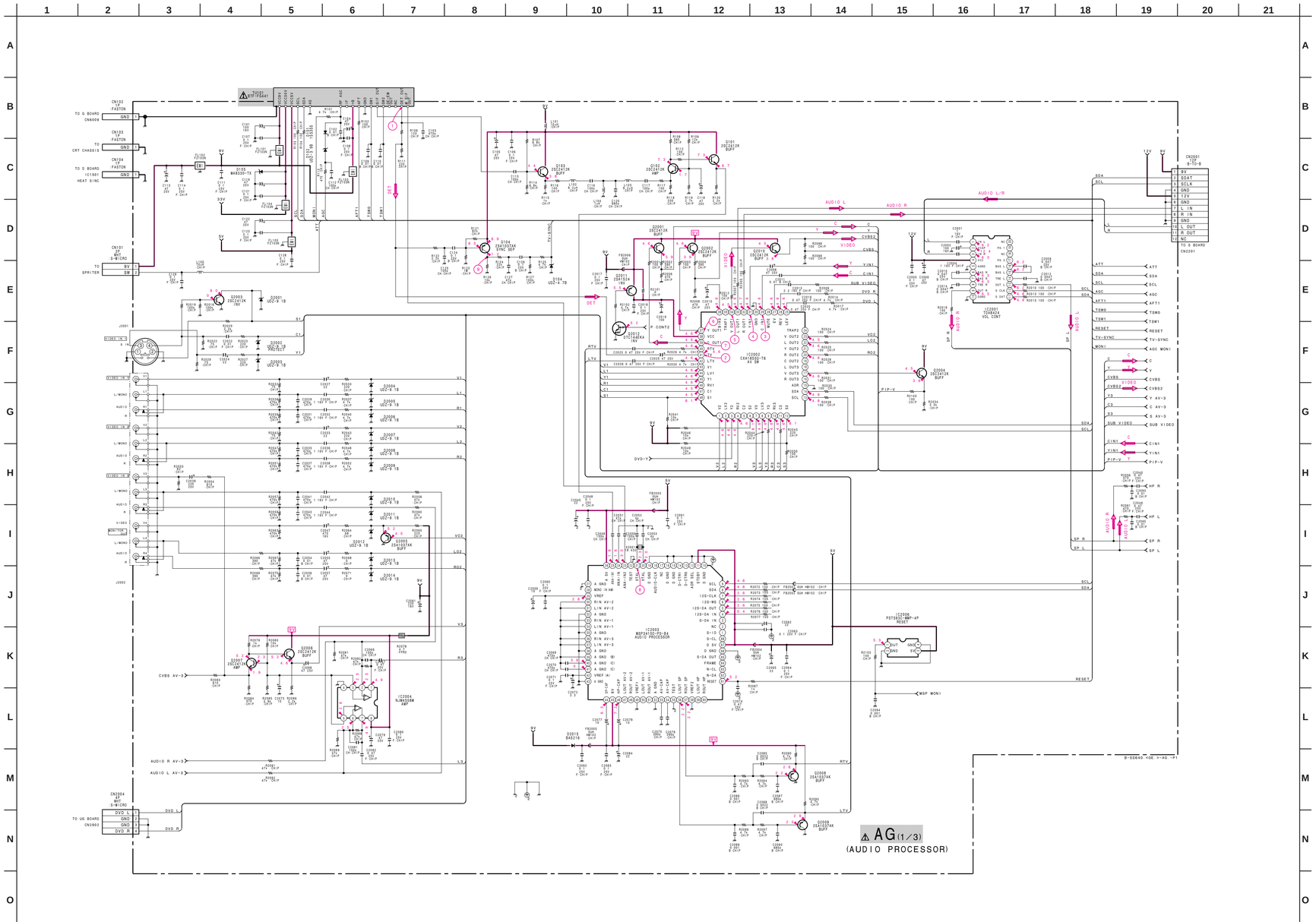

• AG (1/3) BOARD WAVEFORMS

① PAL 1.4 Vp-p (H)	① NTSC 1.6 Vp-p (H)	① SECAM 1.5 Vp-p (H)	② PAL 0.9 Vp-p (H)	② NTSC 1.0 Vp-p (H)	② SECAM 1.0 Vp-p (H)
③ PAL 0.9 Vp-p (H)	③ NTSC 1.5 Vp-p (H)	③ SECAM 2.2 Vp-p (H)	④ PAL 1.5 Vp-p (H)	④ NTSC 1.8 Vp-p (H)	④ SECAM 1.7 Vp-p (H)
⑤ PAL 1.8 Vp-p (H)	⑤ NTSC 2.0 Vp-p (H)	⑤ SECAM 1.7 Vp-p (H)	⑥ PAL 1.5 Vp-p (H)	⑥ NTSC 1.7 Vp-p (H)	⑥ SECAM 1.7 Vp-p (H)
⑦ PAL 0.9 Vp-p (H)	⑦ NTSC 1.6 Vp-p (H)	⑦ SECAM 2.3 Vp-p (H)	⑧ 1.4 Vp-p (18.432 MHz)	⑨ 8.4 Vp-p (H)	

(2) Schematic Diagram of AG (2/3) Board

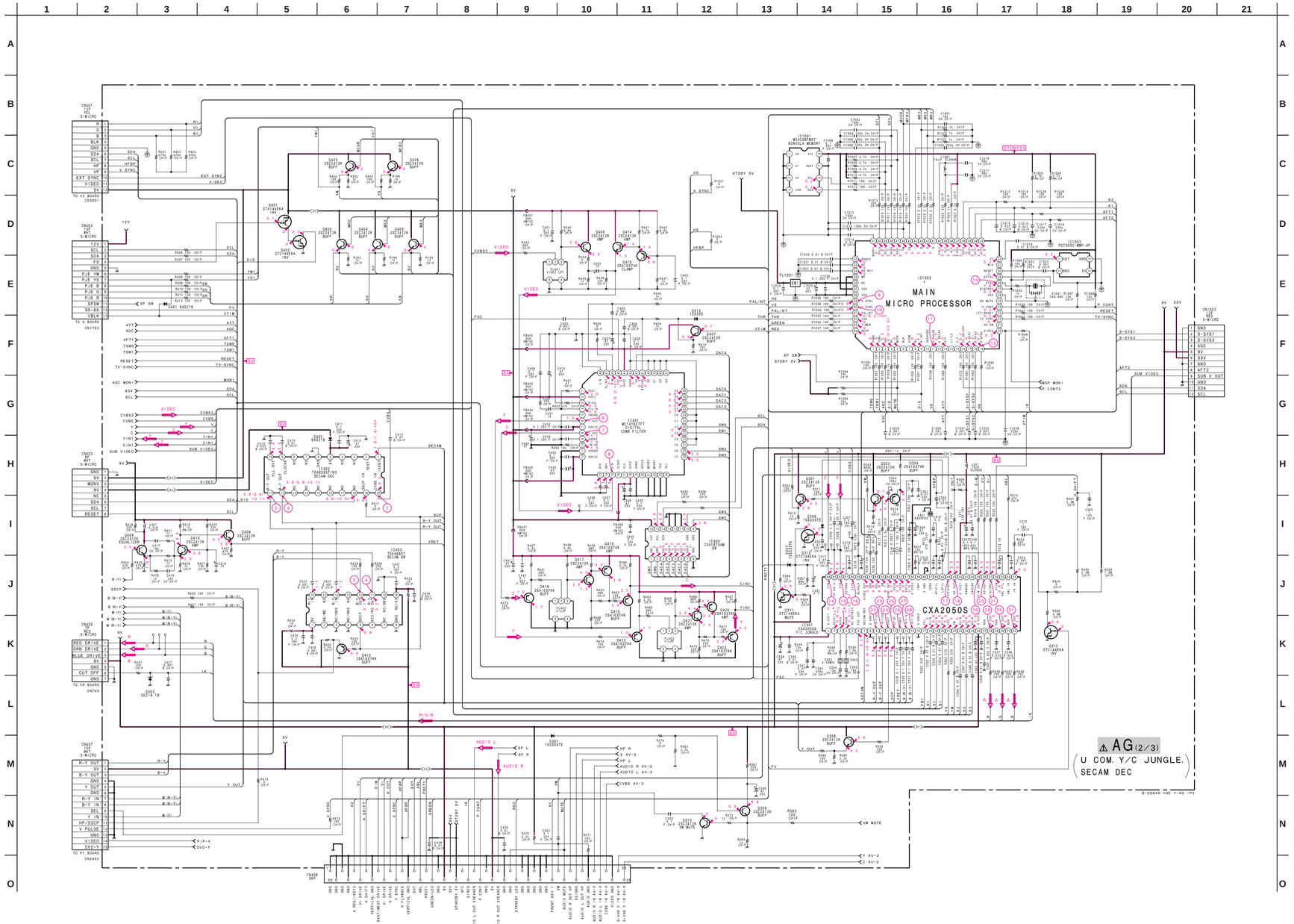

• AG BOARD ✳ MARK LIST

Ref No.	GE / HK / AUS MODEL	ME MODEL
IC1003	CXP85452-214Q-TL	CXP85452-215Q-TL

• AG (2/3) BOARD WAVEFORMS

① PAL 0.9 Vp-p (H)	① NTSC 1.0 Vp-p (H)	① SECAM 0.9 Vp-p (H)	② PAL : 0.6 Vp-p (H) SECAM : 1.1 Vp-p (H)	② NTSC 0.7 Vp-p (H)	③ PAL : 0.7 Vp-p (H) SECAM : 1.5 Vp-p (H)	③ NTSC 0.8 Vp-p (H)	④ PAL/SECAM 1.1 Vp-p (H)
④ NTSC 1.3 Vp-p (H)	⑤ PAL/SECAM 1.4 Vp-p (H)	⑤ NTSC 1.6 Vp-p (H)	⑥ PAL 0.9 Vp-p (H)	⑥ NTSC 1.0 Vp-p (H)	⑥ SECAM 1.0 Vp-p (H)	⑦ PAL 0.5 Vp-p (H)	⑦ NTSC 0.6 Vp-p (H)
⑦ SECAM 1.0 Vp-p (H)	⑧ PAL 1.5 Vp-p (H)	⑧ NTSC 1.8 Vp-p (H)	⑧ SECAM 1.6 Vp-p (H)	⑨ 4.6 Vp-p (H)	⑩ 5.3 Vp-p (V)	⑪ 5.3 Vp-p (V)	⑫ 4.6 Vp-p (H)
⑬ 5.0 Vp-p (4MHz)	⑭ PAL 0.5 Vp-p (H)	⑭ NTSC 1.0 Vp-p (H)	⑭ SECAM 1.2 Vp-p (H)	⑮ PAL 0.8 Vp-p (H)	⑮ NTSC 1.0 Vp-p (H)	⑮ SECAM 1.0 Vp-p (H)	⑯ PAL 0.9 Vp-p (H)
⑯ NTSC 1.0 Vp-p (H)	⑯ SECAM 1.0 Vp-p (H)	⑰ 4.8 Vp-p (H)	⑱ 4.9 Vp-p (H)	⑲ 0.5 Vp-p (V)	⑳ 1.3 Vp-p (V)	㉑ 1.3 Vp-p (V)	㉒ PAL : 0.6 Vp-p (H) SECAM : 1.1 Vp-p (H)
㉒ NTSC 0.7 Vp-p (H)	㉓ PAL : 0.7 Vp-p (H) SECAM : 1.5 Vp-p (H)	㉓ NTSC 0.8 Vp-p (H)	㉔ PAL/SECAM 1.0 Vp-p (H)	㉔ NTSC 1.1 Vp-p (H)	㉕ PAL/SECAM 4.5 Vp-p (H)	㉖ PAL/SECAM 0.9 Vp-p (H)	㉖ NTSC 1.1 Vp-p (H)
㉗ PAL/SECAM 1.1 Vp-p (H)	㉗ NTSC 1.3 Vp-p (H)	㉘ PAL/SECAM 1.4 Vp-p (H)	㉘ NTSC 1.6 Vp-p (H)	㉙ PAL/SECAM 3.4 Vp-p (H)	㉙ NTSC 4.2 Vp-p (H)	㉚ PAL/SECAM 3.4 Vp-p (H)	㉚ NTSC 3.8 Vp-p (H)
㉛ PAL/SECAM 3.4 Vp-p (H)	㉛ NTSC 3.8 Vp-p (H)						

Schematic diagram
← AG (1/3) board
– 71 –
Schematic diagrams
AG (2/3) board →
– 72 –
– 73 –
– 74 –

(3) Schematic Diagrams of AG (3/3), CB, CG and CR Boards

CR [RED AMP] **CG** [GREEN AMP] **CB** [BLUE AMP]

• **AG (2/3) BOARD IC401 MC141627FT**

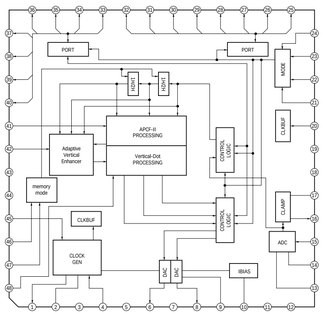

— CR BOARD —

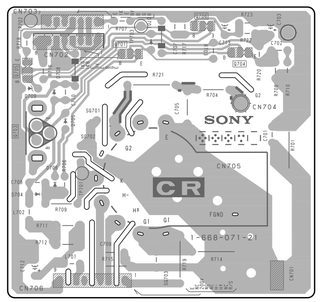

— CG BOARD —

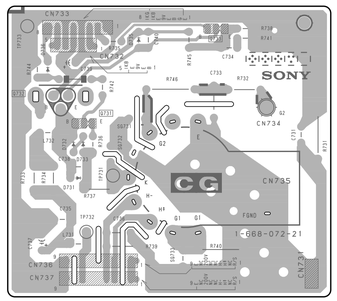

— CB BOARD —

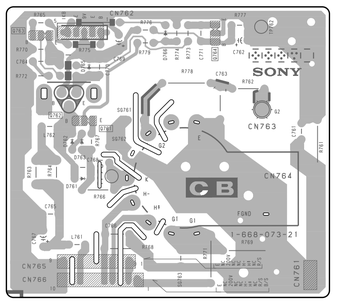

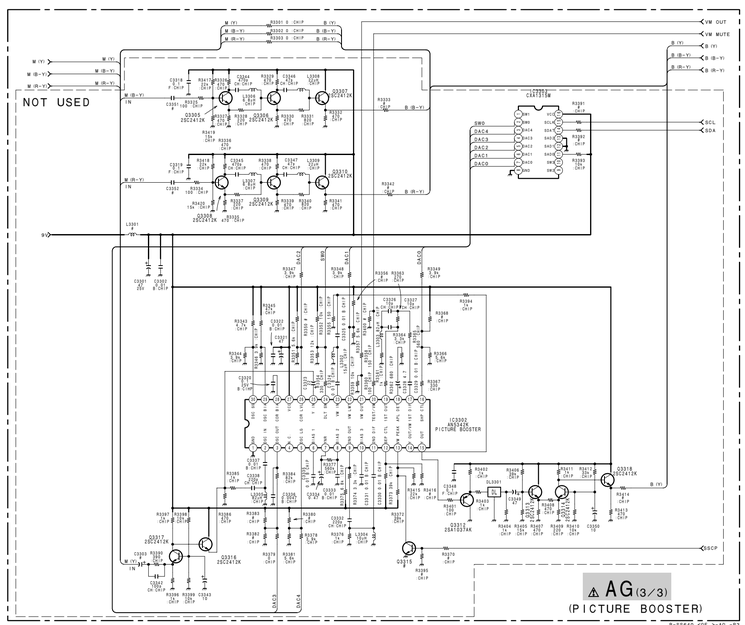

• **CR BOARD WAVEFORMS**

① PAL/SECAM	① NTSC
3.5 Vp-p (H)	4.4 Vp-p (H)
② PAL/SECAM	② NTSC
3.5 Vp-p (H)	3.8 Vp-p (H)
③ PAL/SECAM	③ NTSC
3.6 Vp-p (H)	3.8 Vp-p (H)
④ PAL/SECAM	④ NTSC
94.0 Vp-p (H)	117 Vp-p (H)

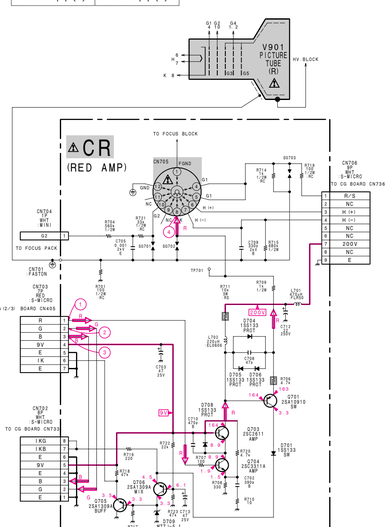

• **CG BOARD WAVEFORMS**

① PAL/SECAM	① NTSC
3.5 Vp-p (H)	3.6 Vp-p (H)
② PAL/SECAM	② NTSC
3.5 Vp-p (H)	3.8 Vp-p (H)
③ PAL/SECAM	③ NTSC
126 Vp-p (H)	139 Vp-p (H)

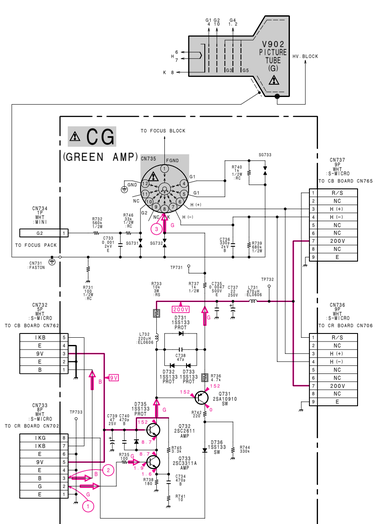

• **CB BOARD WAVEFORMS**

① PAL/SECAM	① NTSC
3.5 Vp-p (H)	3.7 Vp-p (H)
② PAL/SECAM	② NTSC
117 Vp-p (H)	125 Vp-p (H)

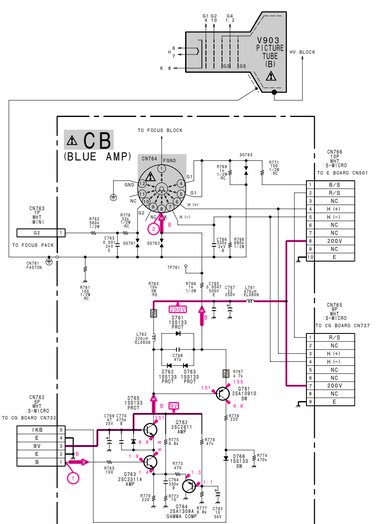

(4) Schematic Diagram of E Board

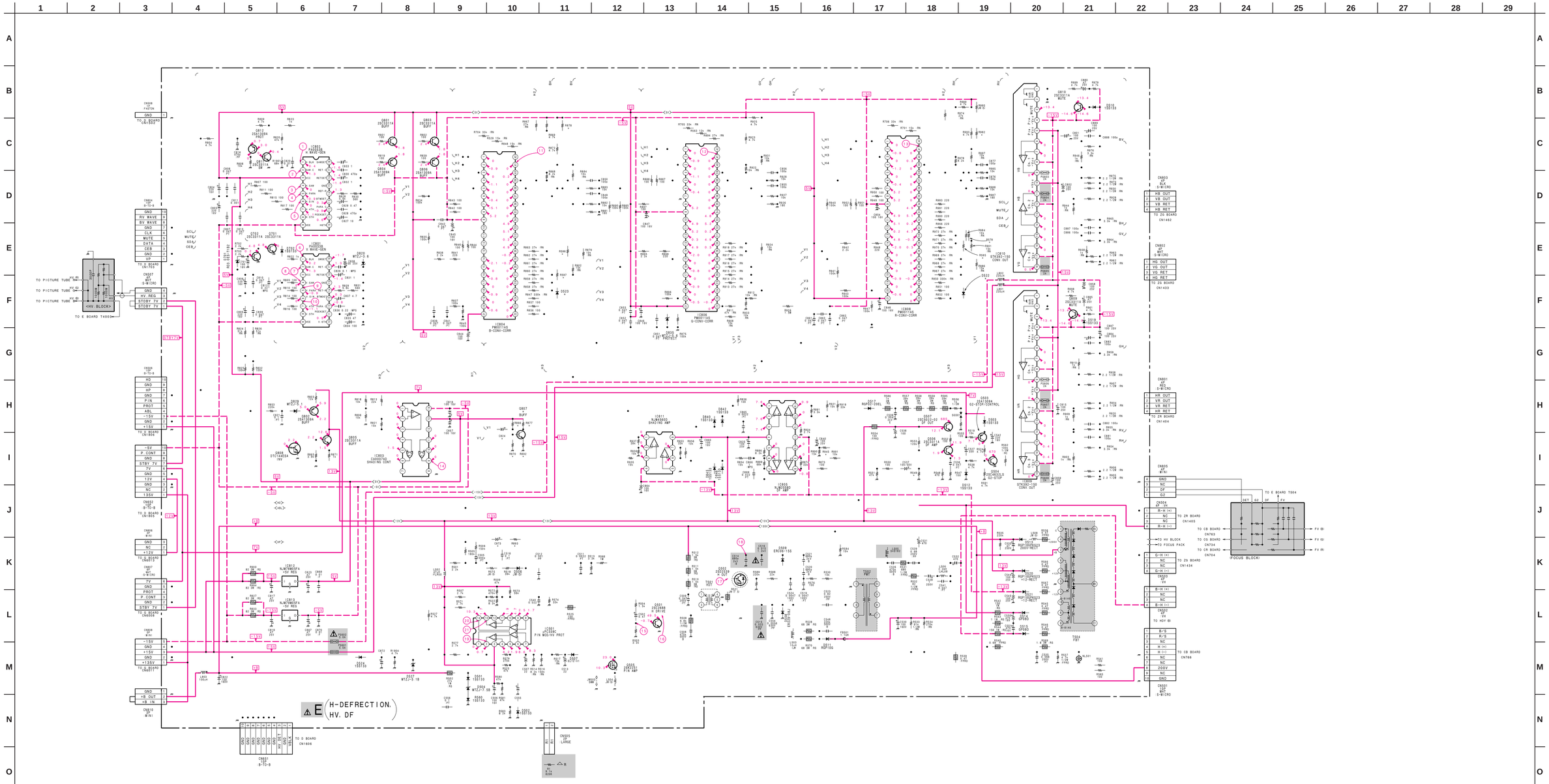

D AUDIO AMP, V-DEFRECTION, SENCOR AMP, SHADING AMP

— D BOARD (Conductor Side) —

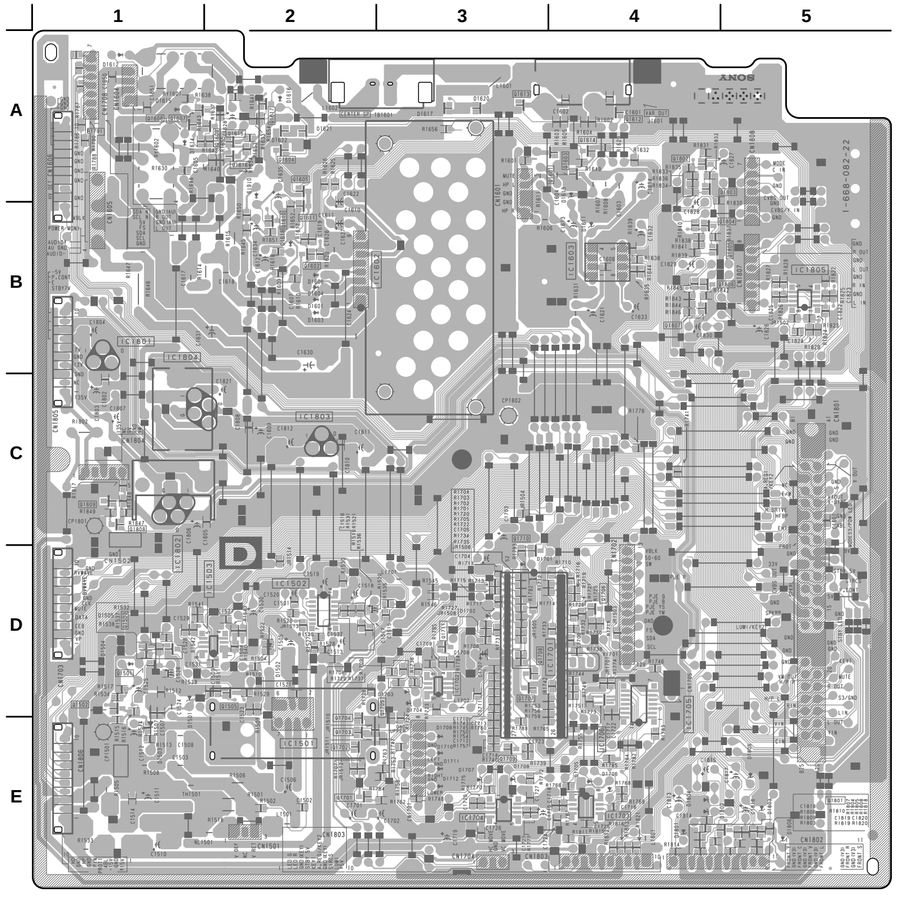

KP-EF41HK2/ME2/MN2/SN2, EF48HK2/ME2/MN2/SN2,
EF53HK2/ME2/MN2/SN2 RM-871

— D BOARD (Component Side) —

KP-EF41HK2/ME2/MN2/SN2, EF48HK2/ME2/MN2/SN2,
EF53HK2/ME2/MN2/SN2 RM-871

(5) Schematic Diagram of D Board

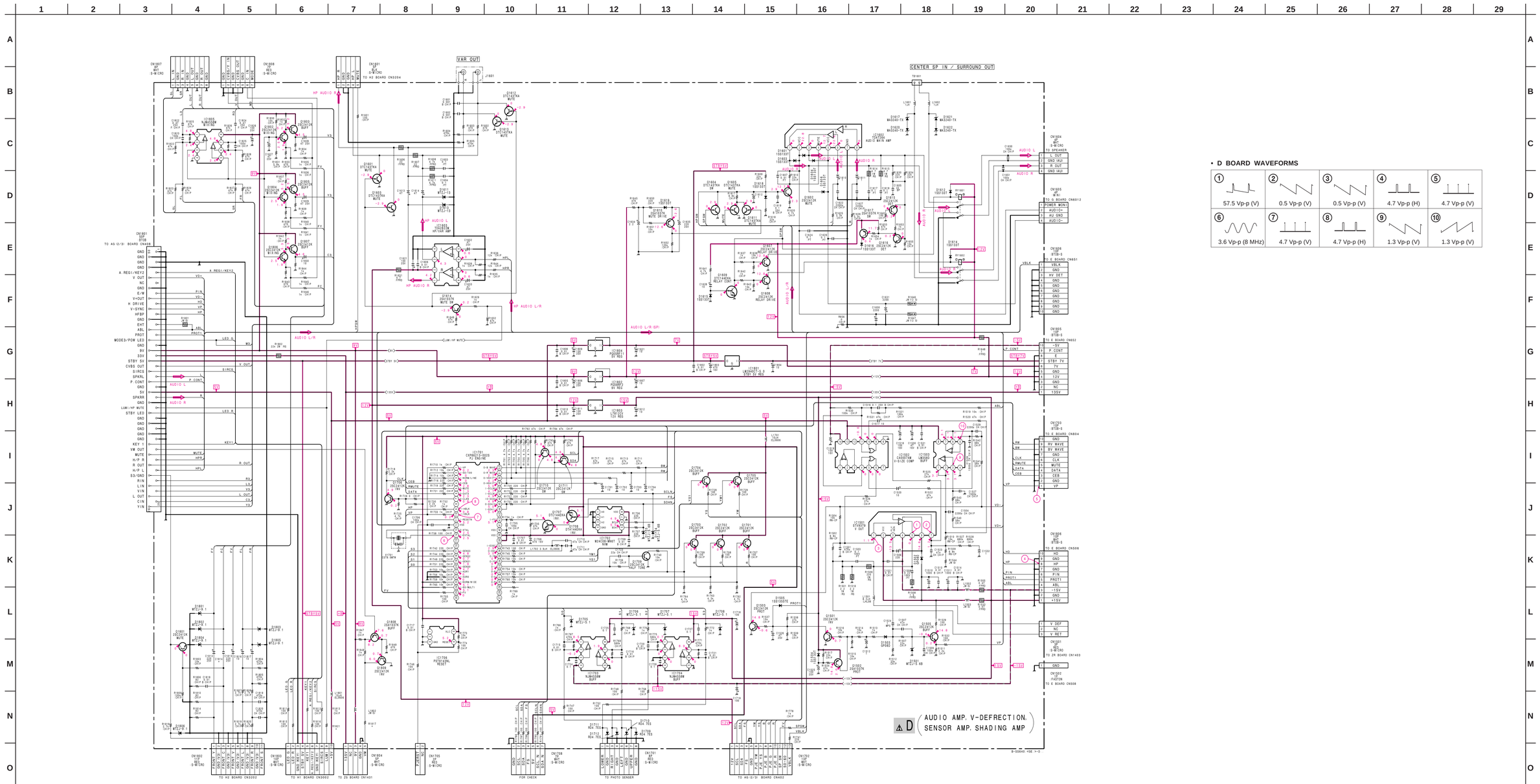

• D BOARD WAVEFORMS

①	②	③	④	⑤
57.5 Vp-p (V)	0.5 Vp-p (V)	0.5 Vp-p (V)	4.7 Vp-p (H)	4.7 Vp-p (V)
⑥	⑦	⑧	⑨	⑩
3.6 Vp-p (8 MHz)	4.7 Vp-p (V)	4.7 Vp-p (H)	1.3 Vp-p (V)	1.3 Vp-p (V)

(3) Schematic Diagrams of AG (3/3), CB, CG and CR Boards

• P1 BOARD IC2406 BA7606F

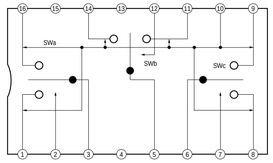

• P1 BOARD WAVEFORMS

① 2.5 Vp-p (20.48MHz)	② PAL/SECAM 1.2 Vp-p (H)	② NTSC 1.2 Vp-p (H)	③ PAL/SECAM 1.0 Vp-p (H)	③ NTSC 1.4 Vp-p (H)	④ PAL/SECAM 1.3 Vp-p (H)
④ NTSC 1.6 Vp-p (H)	⑤ PAL/SECAM 1.2 Vp-p (H)	⑤ NTSC 1.2 Vp-p (H)	⑥ PAL/SECAM 1.3 Vp-p (H)	⑥ NTSC 1.6 Vp-p (H)	⑦ PAL/SECAM 1.0 Vp-p (H)
⑦ NTSC 1.3 Vp-p (H)					

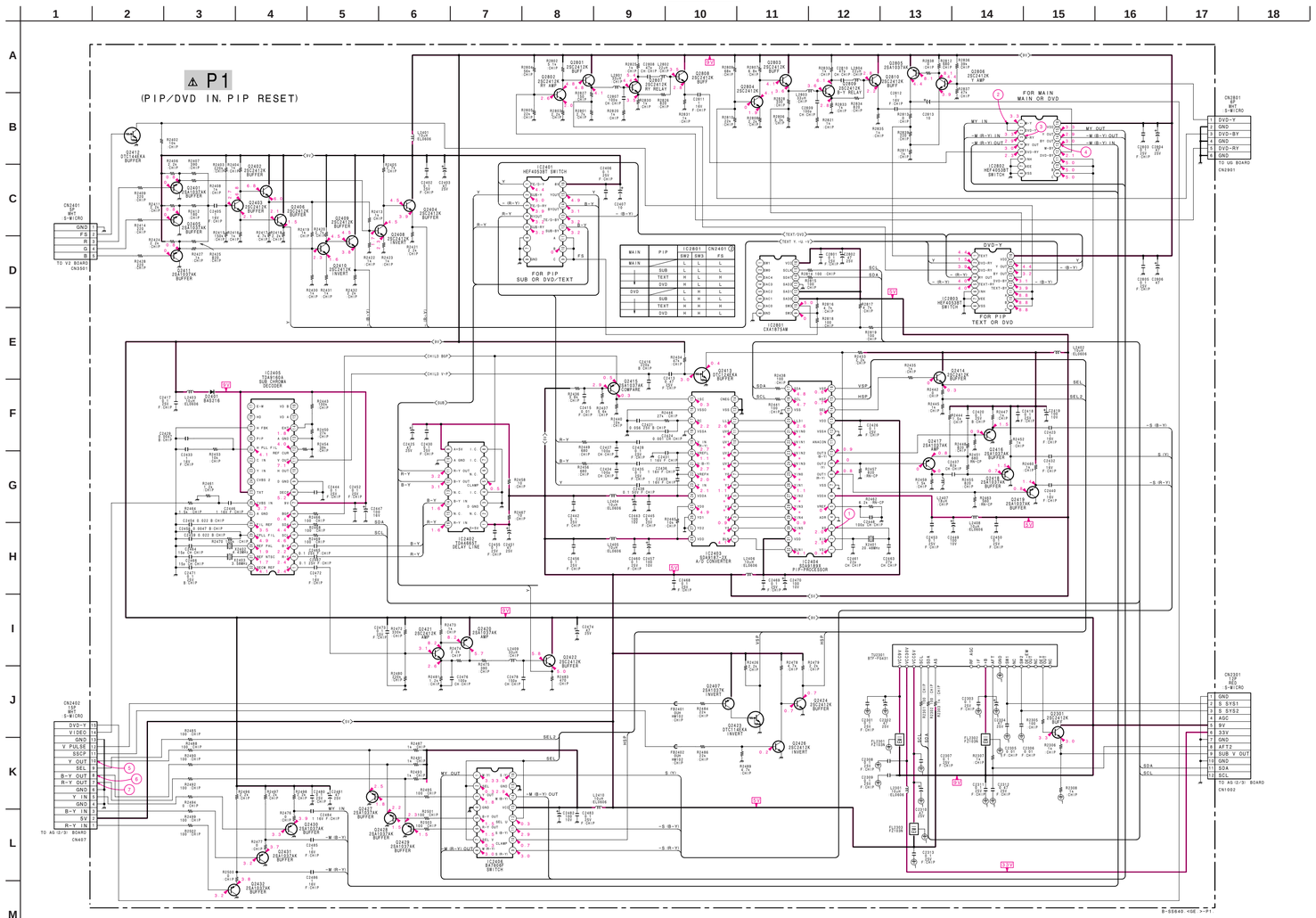

• V2 BOARD WAVEFORMS

① 4.3 Vp-p (12MHz)	
② 4.7 Vp-p (V)	
③ 4.7 Vp-p (H)	

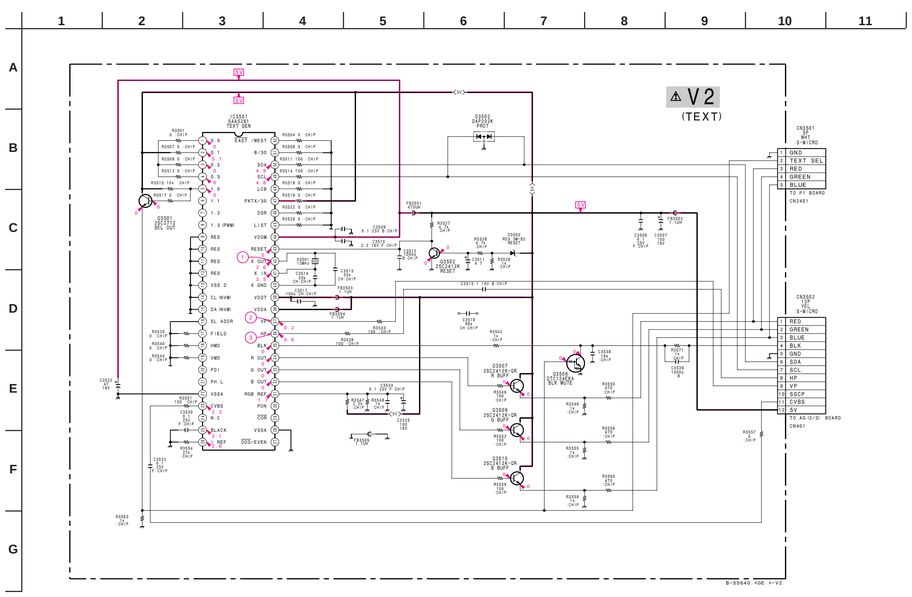

Schematic diagram
← D board

– 93 –

Schematic diagrams
P1 V2 board →

– 94 –

– 95 –

– 96 –

P1 [PIP/DVD IN, PIP TEXT] **V2** [TEXT]

— P1 BOARD (Conductor Side) —

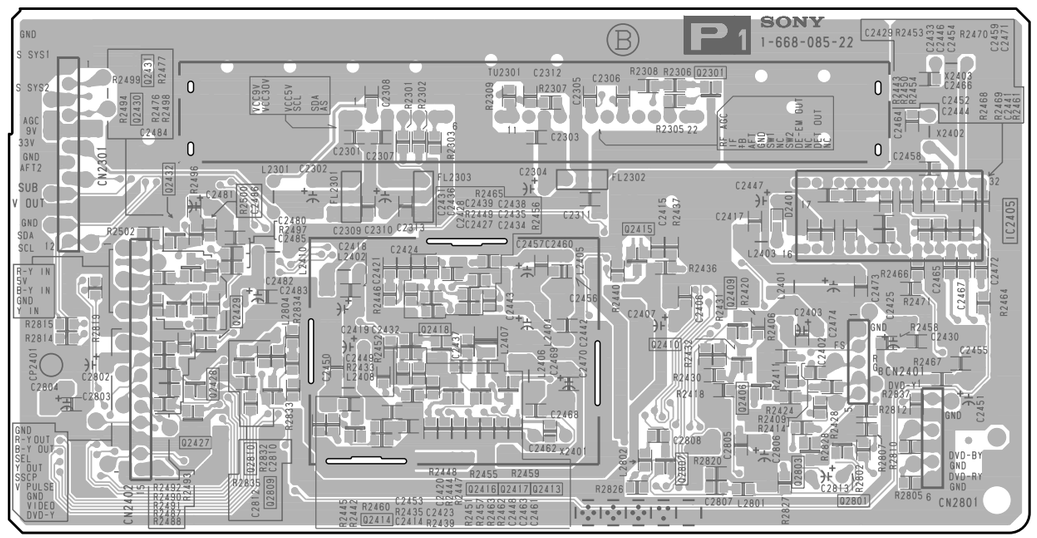

— V2 BOARD —

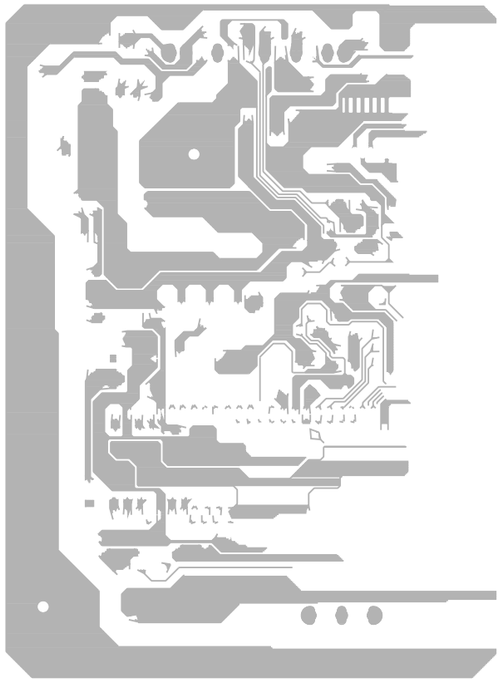

V2 BOARD
Terminal name of semiconductors in silk screen printed circuit (∗)

Ref.	∗
D3502	⑩
D3503	④
Q3501, Q2502, Q3506, Q3507, Q3509, Q3510	①

∗: Refer to Terminal name of semiconductors in silk screen printed circuit (see page 63)

KP-EF41HK2/ME2/MN2/SN2, EF48HK2/ME2/MN2/SN2,
EF53HK2/ME2/MN2/SN2 RM-871

— P1 BOARD (Component Side) —

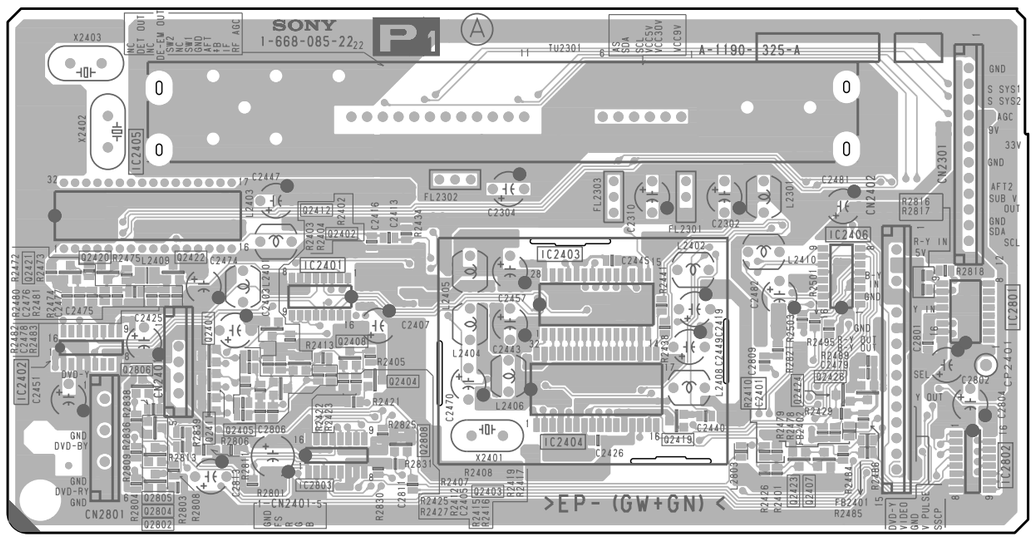

P1 BOARD
Terminal name of semiconductors in silk screen printed circuit (∗)

Ref.	∗
D2401	③
Q2301, Q2406, Q2409, Q2410, Q2413-Q2418, Q2427-Q2432, Q2801, Q2803, Q2807, Q2809, Q2810	①
Q2401-Q2405, Q2407, Q2408, Q2411, Q2412, Q2419-Q2424, Q2426, Q2802, Q2804-Q2806, Q2808	②

∗: Refer to Terminal name of semiconductors in silk screen printed circuit (see page 63)

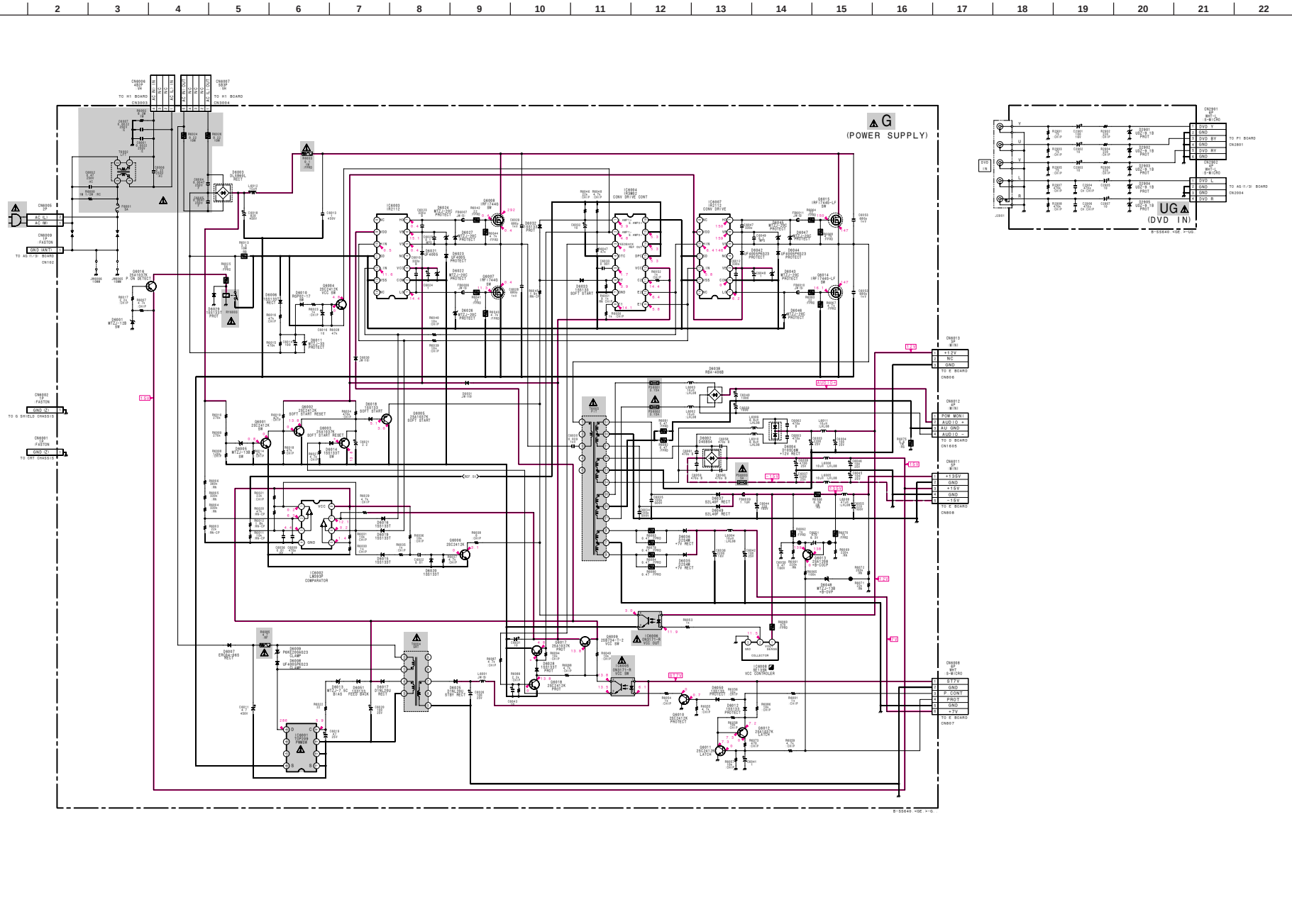
G
(POWER SUPPLY)
UG
(DVD IN)

KP-EF41HK2/ME2/MN2/SN2, EF48HK2/ME2/MN2/SN2,
EF53HK2/ME2/MN2/SN2 RM-871

G [POWER SUPPLY] **UG** [DVD IN]

— G BOARD —

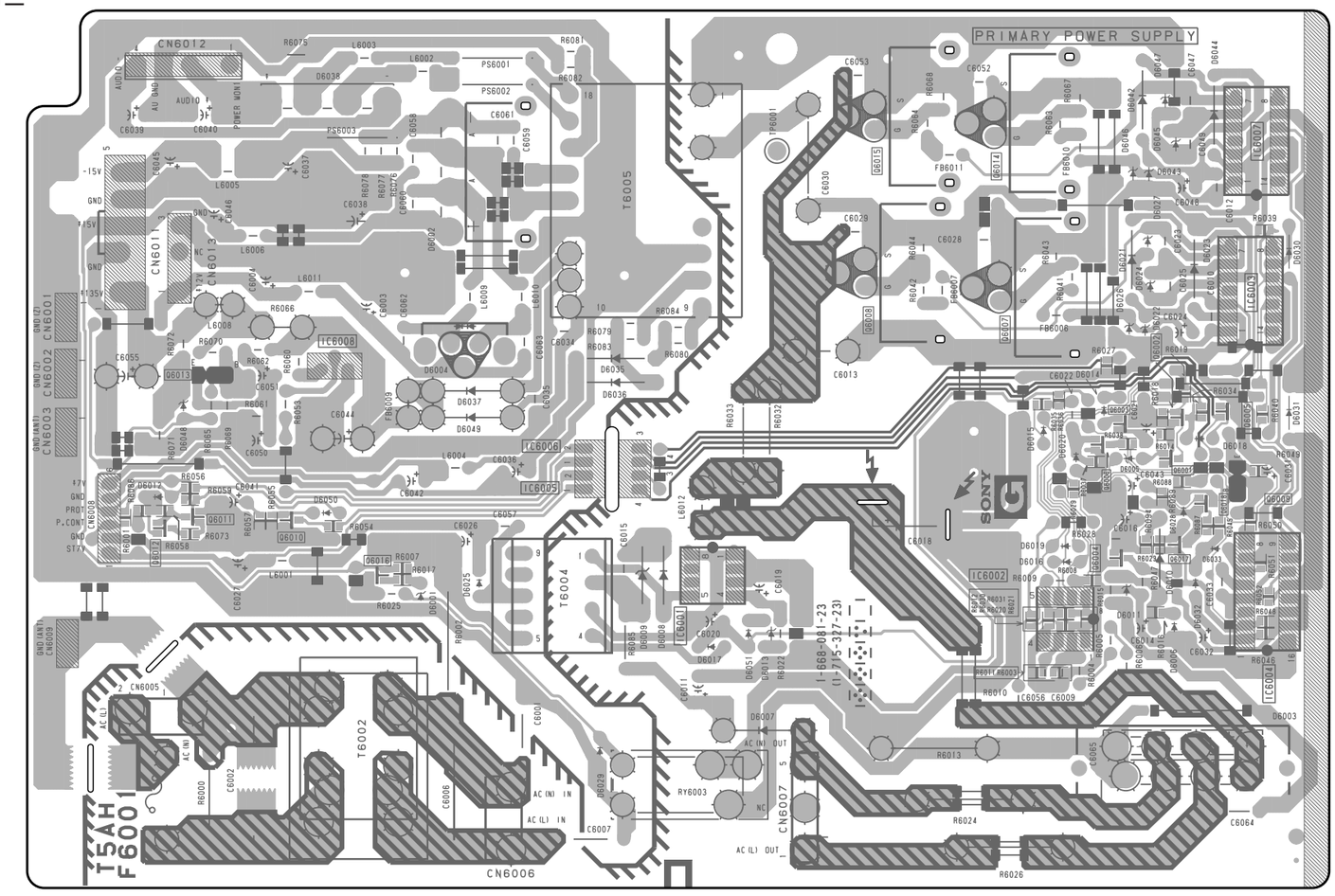

G BOARD
Terminal name of semiconductors in silk screen printed circuit (∗)

Ref.	∗
Q6001-Q6006, Q6010-Q6012, Q6016-Q6018	①

∗: Refer to Terminal name of semiconductors in silk screen printed circuit (see page 63)

— UG BOARD —

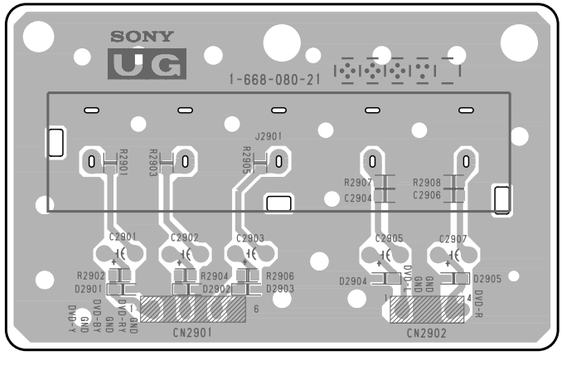

UG BOARD
Terminal name of semiconductors in silk screen printed circuit (∗)

Ref.	∗
D2901-D2905	③

∗: Refer to Terminal name of semiconductors in silk screen printed circuit (see page 63)

6-5. SEMICONDUCTORS

BA7606F-T2
CXA1315M
CXA1875AM-T4
HEF4053BT

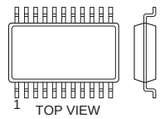

16pin SOP

CA0007AD
IR2112
NJM2058D
µPC339C

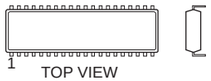

14pin DIP

CA0007AM

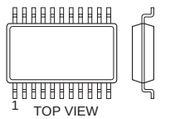

14pin SOP

CXA1855Q
MC141627FT

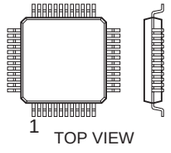

48pin QFP

CXA2050S

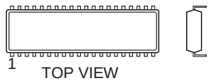

64pin DIP

CXP85452

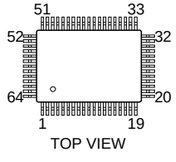

CXP86213-002S
SAA5261

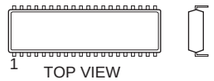

52pin DIP

IR3M02
IR3M02A

16pin DIP

LM2940CT-5.0
L7812CV
NJM78M05FA
PQ09RF2
TA7812S
µPC2405HF

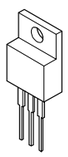

LM358D
LM358DR
NJM4558M-T2
NJM4558M-TE2
ST24C08FM6TR
TL082CPS-E05
TL082M
µPC4558G2

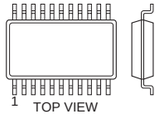

8pin SOP

LM393P
NJM4560D
RC4560D
TDA2822M
TDA7264
TOP209P
µPC393C

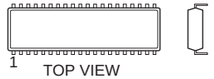

8pin DIP

MC14052BF

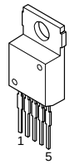

MSP3410D-PS-B4-T-ND

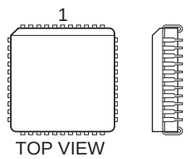

68pin QFJ

NJM79M05FA

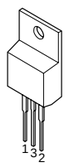

PA0053B

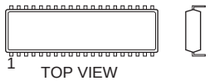

18pin DIP

PM0011AS

42pin DIP

PQ05RF11

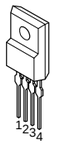

PST593C-MMP-4P

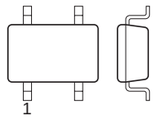

4pin Chip

PST9143NL

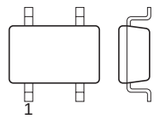

5pin Chip

SDA9187-2XGEG

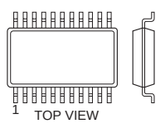

28pin SOP

SDA9189XGEG
SDA9189XGEGA132

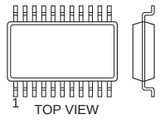

32pin SOP

SE135N-LF12
SE-135N

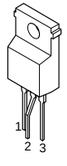

STK392-150

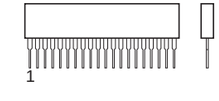

18pin SIP

STV9379

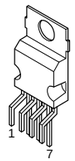

TDA8395T/N3

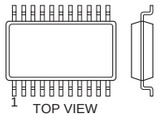

20pin SOP

TDA8424

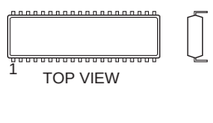

20pin DIP

TDA9160A
XR1071CP

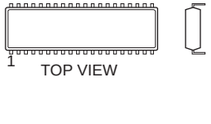

32pin DIP

DTA144EKA-T146
DTC114EK
DTC114EKA-T146
DTC124EK
DTC124EKA-T146
DTC143TKA-T146
DTC144EKA
DTC144EKA-T146
2SA1037AK-T146-QR
2SA1037AK-T146-R
2SA1037K-T-146-QR
2SA1162G
2SC1623-L5L6
2SC2412K-T-146-QR
2SC2712-YG
2SC2712-YG-TE85L

KP-EF41HK2/ME2/MN2/SN2, EF48HK2/ME2/MN2/SN2,
EF53HK2/ME2/MN2/SN2 RM-871

DTC144ESA
DIC144ESA-TP
2SA1175-HFE
2SA1309A-QRSTA
2SC2785-HFE
2SC3311A-QRSTA

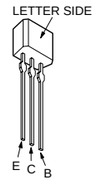

IRFI744G-LF
2SA1837
2SC4793
2SC5022-02

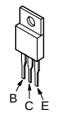

2SA1091-O
2SA1091-TPE2

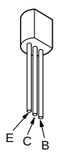

2SA1208

2SA1524
2SA1524-TP

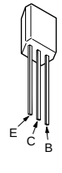

2SB734-34

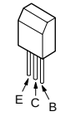

2SC2611
2SC2688-LK

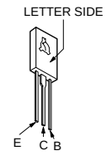

2SC4632LS-CB7
2SD2539 (LBSONY-1)

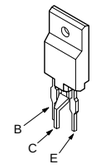

2SK2251-01-F19

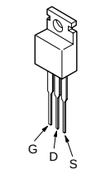

DAP202K

UDZ-TE-17-3.9B
UDZ-TE-17-4.7B
UDZ-TE-17-9.1B
1SS355
1SS355TE-17

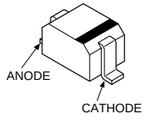

D1NL20-TR
D2S4M

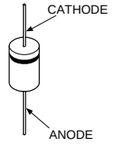

D10SC6M-4012

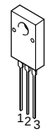

D4SBS4
D4SBS4-F
D6SB60L
RBA-406B

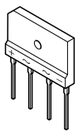

ERC04-06S
ERC06-15S
1SS133T-72
1SS133T-77

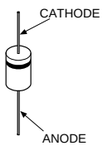

ERD29-08J

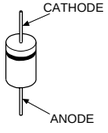

EL1Z
EL1Z-V1
GP08D
GP08DPKG23
MTZJ-T-77-9.1A
RGP02-17EL-6433
RGP02-17PKG23
RGP02-20EL-6394
RGP10GPKG23
S2L40F
UF4005PKG23

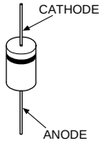

MA3240-TX

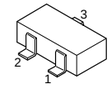

MTZJ-T-77-12B
MTZJ-T-77-13
MTZJ-T-77-13B
MTZJ-T-77-20C
MTZJ-T-77-33
MTZJ-T-77-3.6
MTZJ-T-77-39
MTZJ-T-77-5.1
MTZJ-T-77-5.1B
MTZJ-T-77-5.6
MTZJ-T-77-5.6B
MTZJ-T-77-7.5B
MTZJ-T-77-7.5C
MTZJ-T-77-9.1B
MTZJ-13
MTZJ-13B
MTZJ-33B
MTZJ-7.5B
RD12ES-B2
RD20ES-B2
RD3.0ESB2
RD3.0ES-T1B2
RD3.6ES-B1
RD39ES-B2
RD5.1ES-B1
RD5.1ES-B2
RD5.6ESB2
RD7.5ESB2

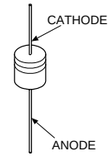

P6KE200AG23

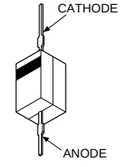

SLA-580LT3F

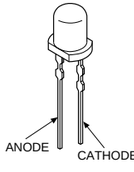

SECTION 7
EXPLODED VIEWS

NOTE:

- Items with no part number and no description are not stocked because they are seldom required for routine service.
- The construction parts of an assembled part are indicated with a collation number in the remark column.
- Items marked " * " are not stocked since they are seldom required for routine service. Some delay should be anticipated when ordering these items.

The components identified by shading and mark ⚠ are critical for safety.
Replace only with part number specified.

7-1. SCREEN AND COVER BLOCK (KP-EF41)

○ : 7-685-663-79 +BVTP 4X16
■ : 7-685-661-79 +BVTP 4X12
● : 7-685-663-71 +BVTP 4X16

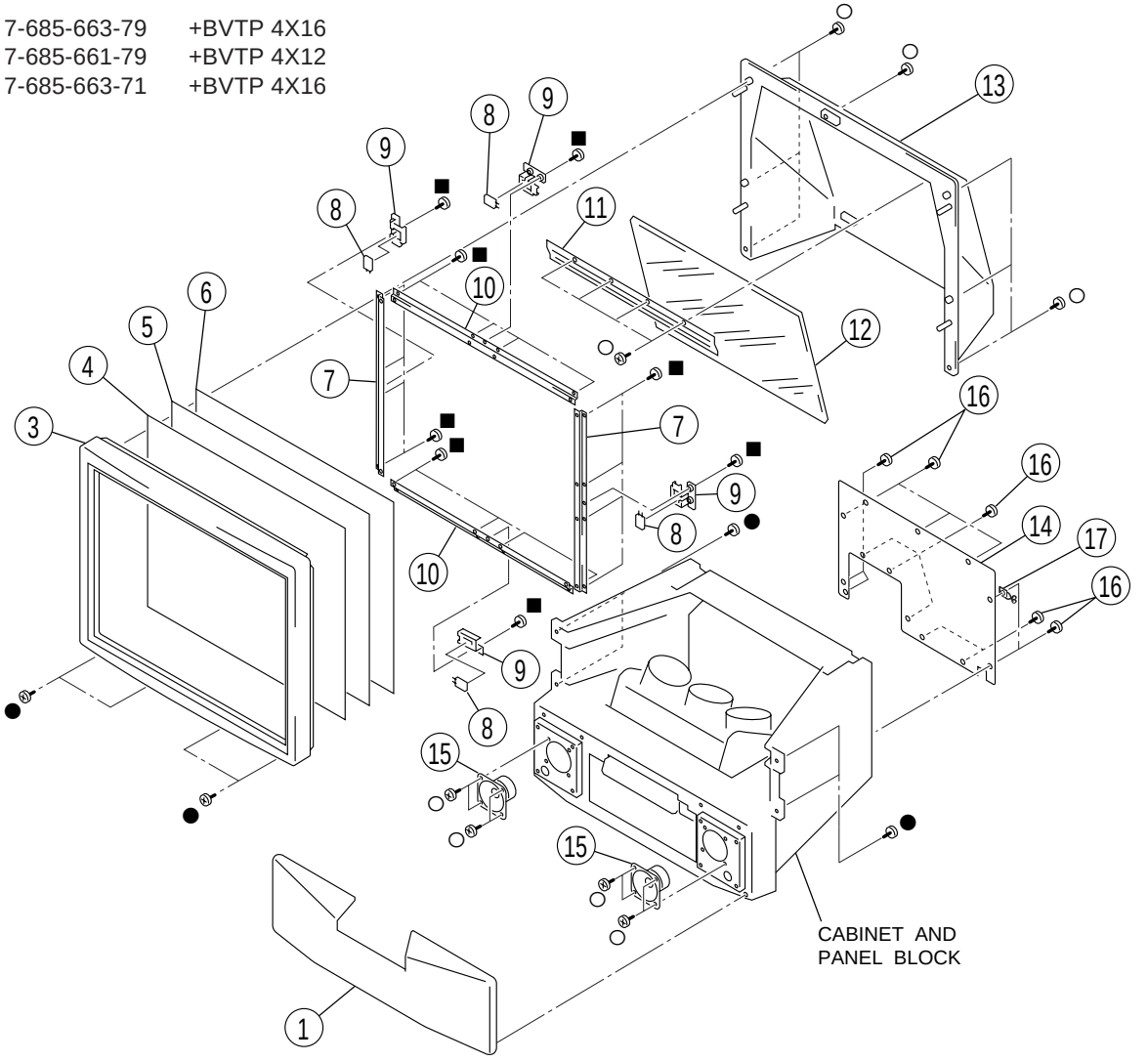

REF. NO.	PART NO.	DESCRIPTION	REMARK
1	X-4036-519-1	GRILLE ASSY, SPEAKER	
3	X-4036-521-1	BEZNET ASSY	
4	4-063-365-11	SCREEN, CONTRAST	
5	4-070-236-11	PLATE (L), DIFFUSION	
6	4-070-358-11	PLATE (F), DIFFUSION	
7	* 4-066-126-01	HOLDER (V), SCREEN	
8	1-528-864-11	BATTERY, SOLAR	
9	* 4-066-132-01	HOLDER, SENSOR	
10	* 4-066-125-01	HOLDER (H), SCREEN	
11	* 4-066-129-01	HOLDER, MIRROR	
12	4-066-117-01	MIRROR (41)	
13	* 4-066-151-01	COVER, MIRROR	
14	* 4-066-148-01	BOARD (41), REAR	
15	1-505-426-21	SPEAKER (10.6CM)	
16	4-378-522-31	SCREW, TAPPING, HEXAGON HEAD	
17	3-703-319-01	PURSE LOCK (DIA.15)	

7-2. CABINET AND PANEL BLOCK (KP-EF41)

The components identified by shading and mark ⚠ are critical for safety.
Replace only with part number specified.

○ : 7-685-663-79 +BVTP 4X16
● : 7-685-663-71 +BVTP 4X16
▲ : 7-685-648-79 +BVTP 3X12

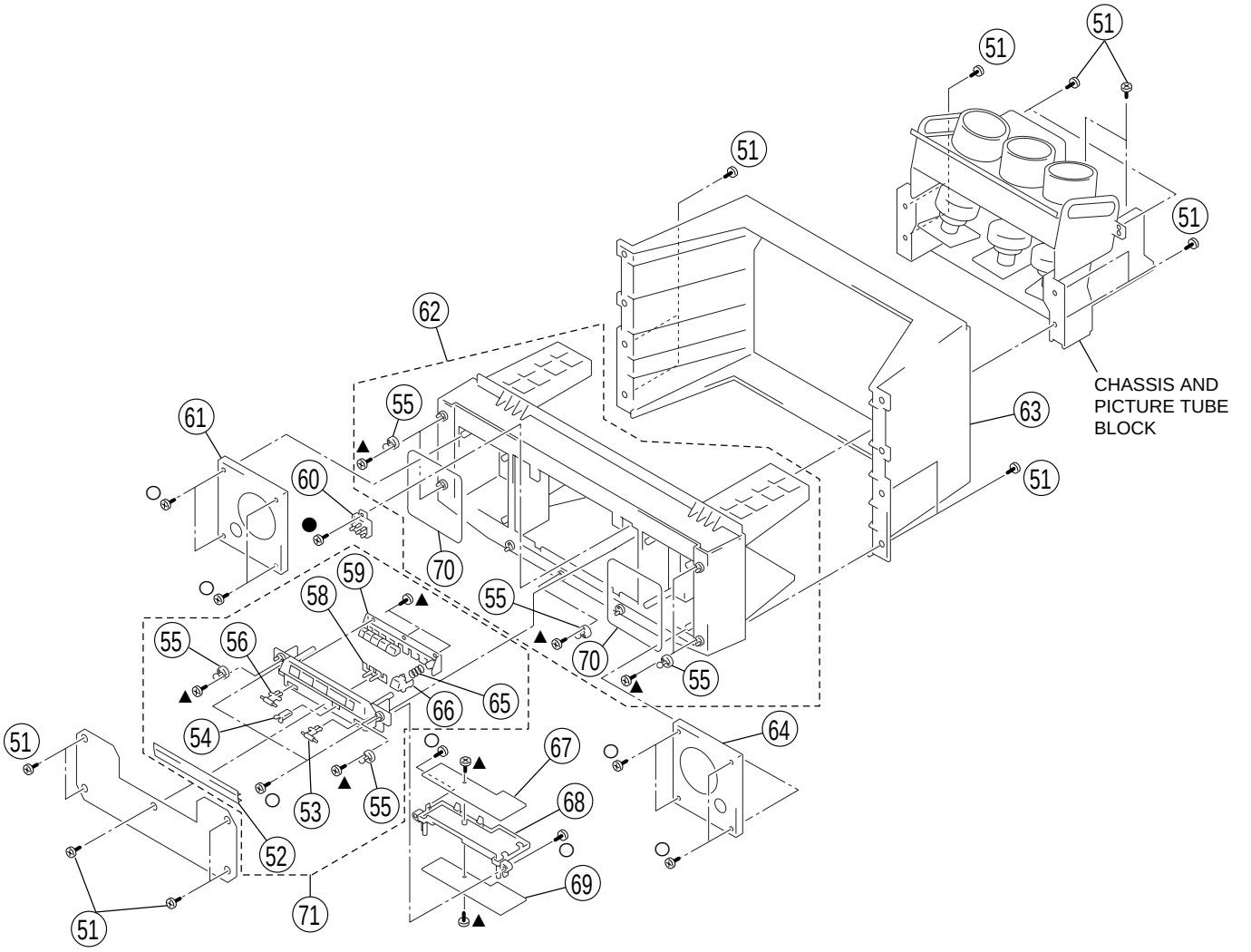

REF. NO.	PART NO.	DESCRIPTION	REMARK
51	4-378-522-31	SCREW, TAPPING, HEXAGON HEAD	
52	4-066-140-21	DOOR	
53	4-045-250-21	DAMPER	
54	4-047-464-01	CATCHER, PUSH	
55	4-843-806-00	STRIKE	
56	3-703-035-11	SHAFT, LID	
58	4-066-130-01	GUIDE, LIGHT	
59	4-066-141-11	BUTTON, MULTI	
60	⚠ 1-223-925-11	RESISTOR ASSY (HIGH-VOLTAGE)	
61	* 4-066-145-01	BOARD (L), BAFFLE	
62	X-4036-518-2	CABINET ASSY, FRONT	55,70
63	X-4036-178-1	CABINET ASSY, REAR	
64	* 4-066-146-01	BOARD (R), BAFFLE	
65	4-066-103-01	SPRING, COMPRESSION	
66	4-066-131-11	BUTTON, POWER	
67	* A-1372-518-A	H1 MOUNT	
68	* 4-066-133-01	BRACKET (H)	
69	* A-1375-177-A	H2 COMPL	
70	* 4-066-106-01	SPACER (SP)	
71	X-4036-520-1	PANEL ASSY, CONTROL	52-56,58,59,65,66

The components identified by shading and mark ⚠ are critical for safety.
Replace only with part number specified.

7-3. CHASSIS AND PICTURE TUBE BLOCK (KP-EF41)

● : 7-685-663-71 +BVTP 4X16
▲ : 7-685-648-79 +BVTP 3X12

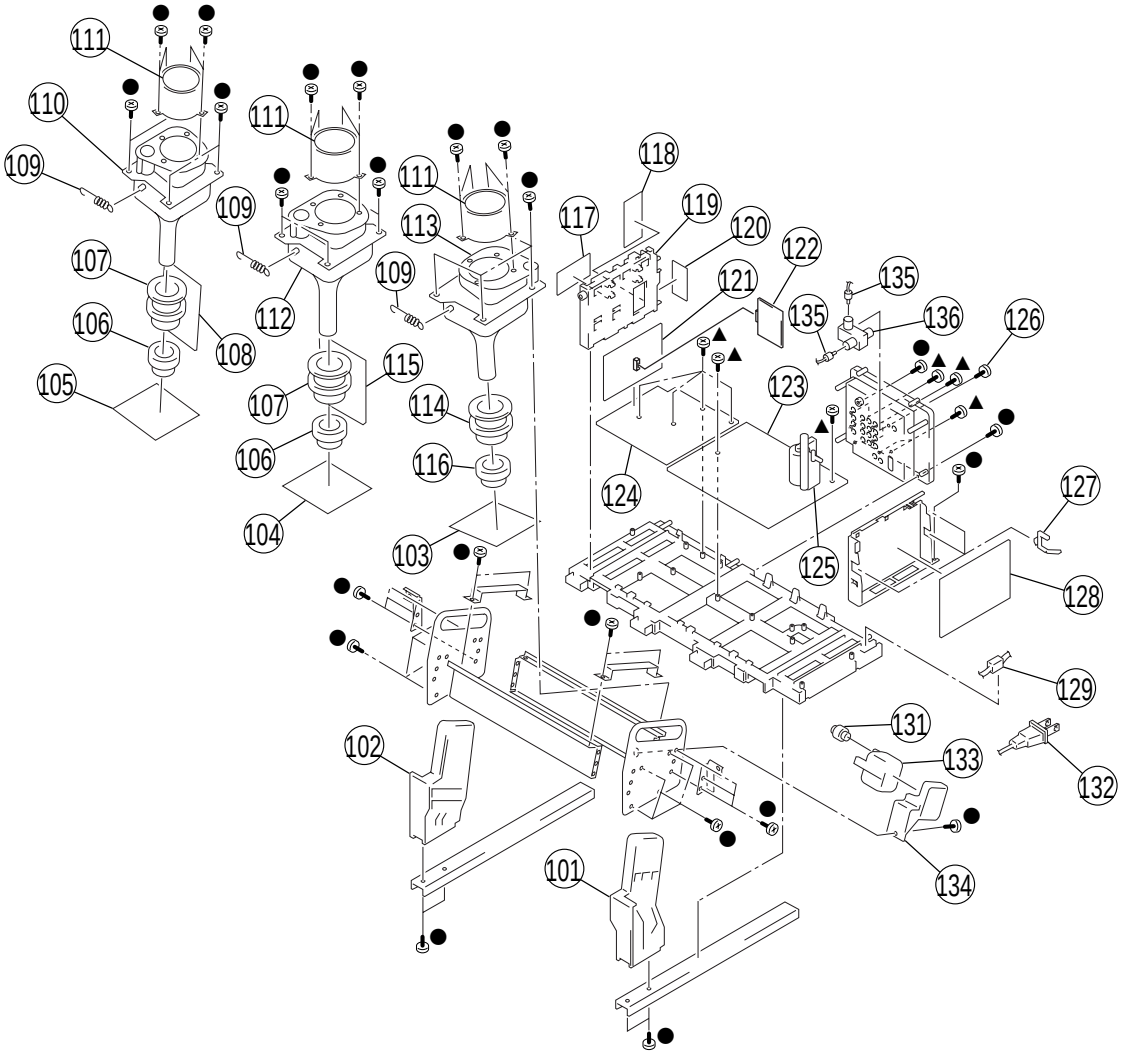

REF. NO.		PART NO.	DESCRIPTION	REMARK
101		* 4-066-135-01	STAY (R), SIDE	
102		* 4-066-134-01	STAY (L), SIDE	
103		* A-1331-834-A	CB MOUNT	
104		* A-1331-833-A	CG MOUNT	
105		* A-1331-835-A	CR MOUNT	
106	⚠	1-452-790-11	NECK ASSY	
107	⚠	1-451-454-51	DEFLECTION YOKE (G)(R)	
108		* A-1390-876-A	ZR MOUNT	
109		4-048-142-31	SPRING, TENSION	
110	⚠	A-1501-259-A	PICTURE TUBE MECHASEAL ASSY (R),SLIM	
111		4-056-258-01	LENS (DELTA 78)	
112	⚠	A-1501-260-A	PICTURE TUBE MECHASEAL ASSY (G),SLIM	
113	⚠	A-1501-261-A	PICTURE TUBE MECHASEAL ASSY (B),SLIM	
114	⚠	1-451-455-61	DEFLECTION YOKE (B)	
115		* A-1390-877-A	ZG MOUNT	
116	⚠	1-452-909-31	MAGNET ASSY, 4 POLE	
117		* A-1342-428-A	V2 MOUNT	
118		* A-1190-325-A	P1 MOUNT	
119		* 4-066-142-01	TERMINAL BOARD	
120		* A-1373-691-A	UG MOUNT	
121		* A-1298-632-A	AG COMPL (EF41MN2,HK2,SN2)	

REF. NO.		PART NO.	DESCRIPTION	REMARK
121		* A-1298-673-A	AG COMPL (EF41ME2)	
122		* A-1390-891-A	S MOUNT	
123		* A-1346-764-A	E COMPL	
124		* A-1346-763-A	D COMPL	
125	⚠	1-453-307-11	FBT ASSY NX-4007//M3T4	
126		4-382-854-11	SCREW (M3X10), P, SW (+)	
127		* 4-316-015-00	HOLDER, WIRE	
128		* A-1316-394-A	G COMPL	
129		4-022-115-00	HOLDER, AC CORD	
131		4-373-137-01	CAP (Z), RUBBER	
132	⚠	1-574-062-61	CORD, POWER (WITH CONNECTOR) 2.5A/250V (EF41MN2,ME2)	
132	⚠	1-574-358-51	CORD, POWER (WITH CONNECTOR) (EF41SN2)	
132	⚠	1-769-609-21	CORD, POWER (WITH CONNECTOR) (EF41HK2)	
133	⚠	8-598-955-12	BLOCK ASSY, HIGH-VOLTAGE	
134		* 4-066-144-01	HOLDER, HVR	
135		* 1-555-400-00	CABLE, PIN	
136		1-251-372-21	BOOSTER, RF	

7-4. SCREEN AND COVER BLOCK (KP-EF48)

○ : 7-685-663-79 +BVTP 4X16
□ : 7-685-661-14 +BVTP 4X12

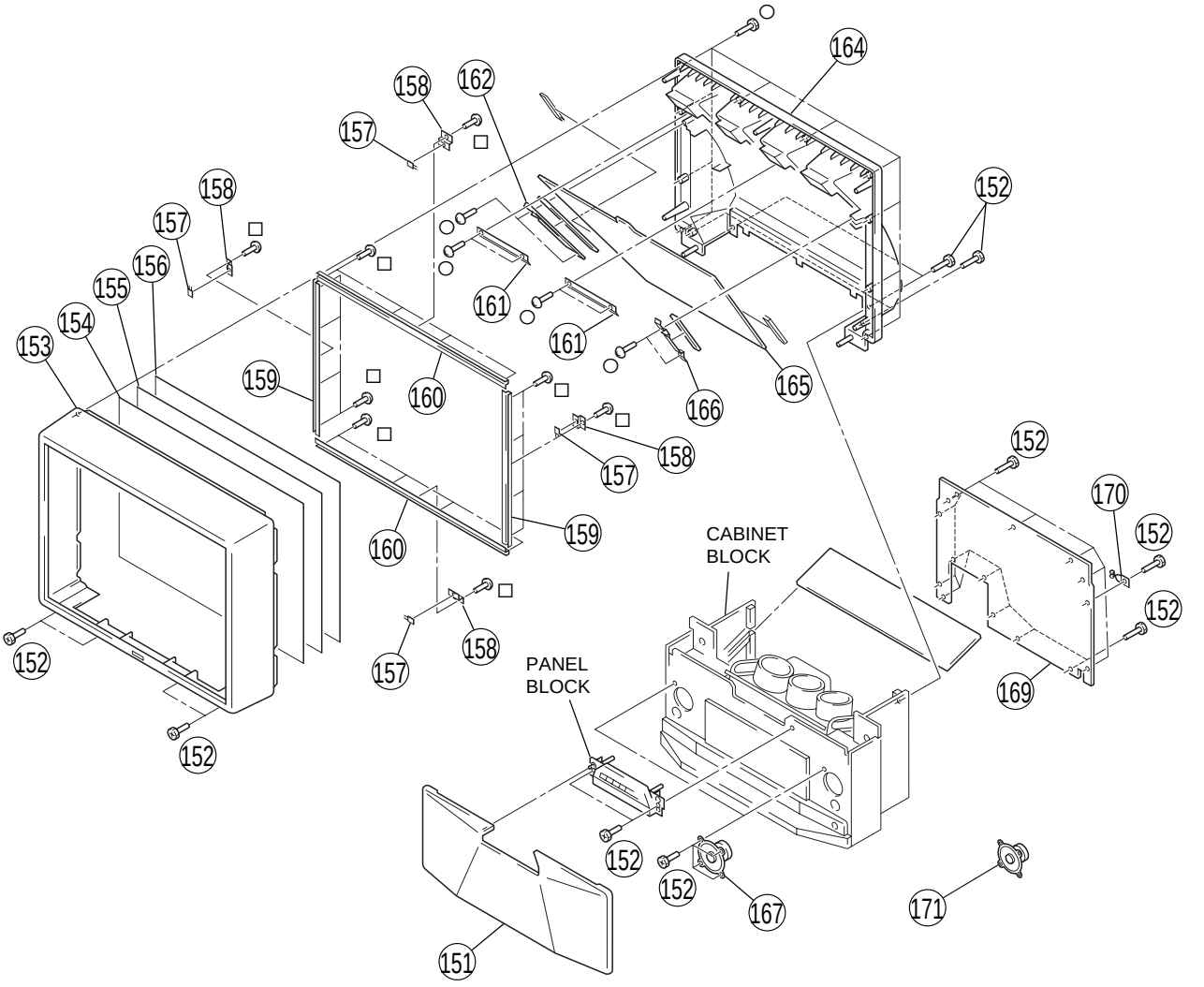

REF. NO.	PART NO.	DESCRIPTION	REMARK
151	X-4035-511-1	GRILLE ASSY, SPEAKER	
152	4-378-522-31	SCREW, TAPPING, HEXAGON HEAD	
153	X-4036-613-1	BEZNET (48) ASSY	
154	4-064-041-01	SCREEN (48), CONTRAST	
155	4-070-235-11	PLATE (L), DIFFUSION	
156	4-058-455-11	PLATE (F), DIFFUSION	
157	1-528-864-11	BATTERY, SOLAR	
158	* 4-066-132-01	HOLDER, SENSOR	
159	* 4-064-051-01	HOLDER (V48), SCREEN	
160	* 4-064-052-01	HOLDER (H), SCREEN	
161	4-064-042-01	HOLDER, MIRROR	
162	* 4-051-790-02	HOLDER, MIRSD (L)	
164	* 4-057-610-01	COVER, MIRROR	
165	4-069-918-01	MIRROR (48)	
166	* 4-051-789-02	HOLDER, MIRSD (R)	
167	1-529-405-11	SPEAKER (16CM)	
169	4-069-922-01	BOARD (48), REAR	
170	3-703-319-01	PURSE LOCK (DIA.15)	
171	1-529-404-11	SPEAKER (5CM)	

The components identified by shading and mark ⚠ are critical for safety.
Replace only with part number specified.

7-5. CABINET AND PANEL BLOCK (KP-EF48)

● : 7-685-663-71 +BVTP 4X16
▲ : 7-685-648-79 +BVTP 3X12

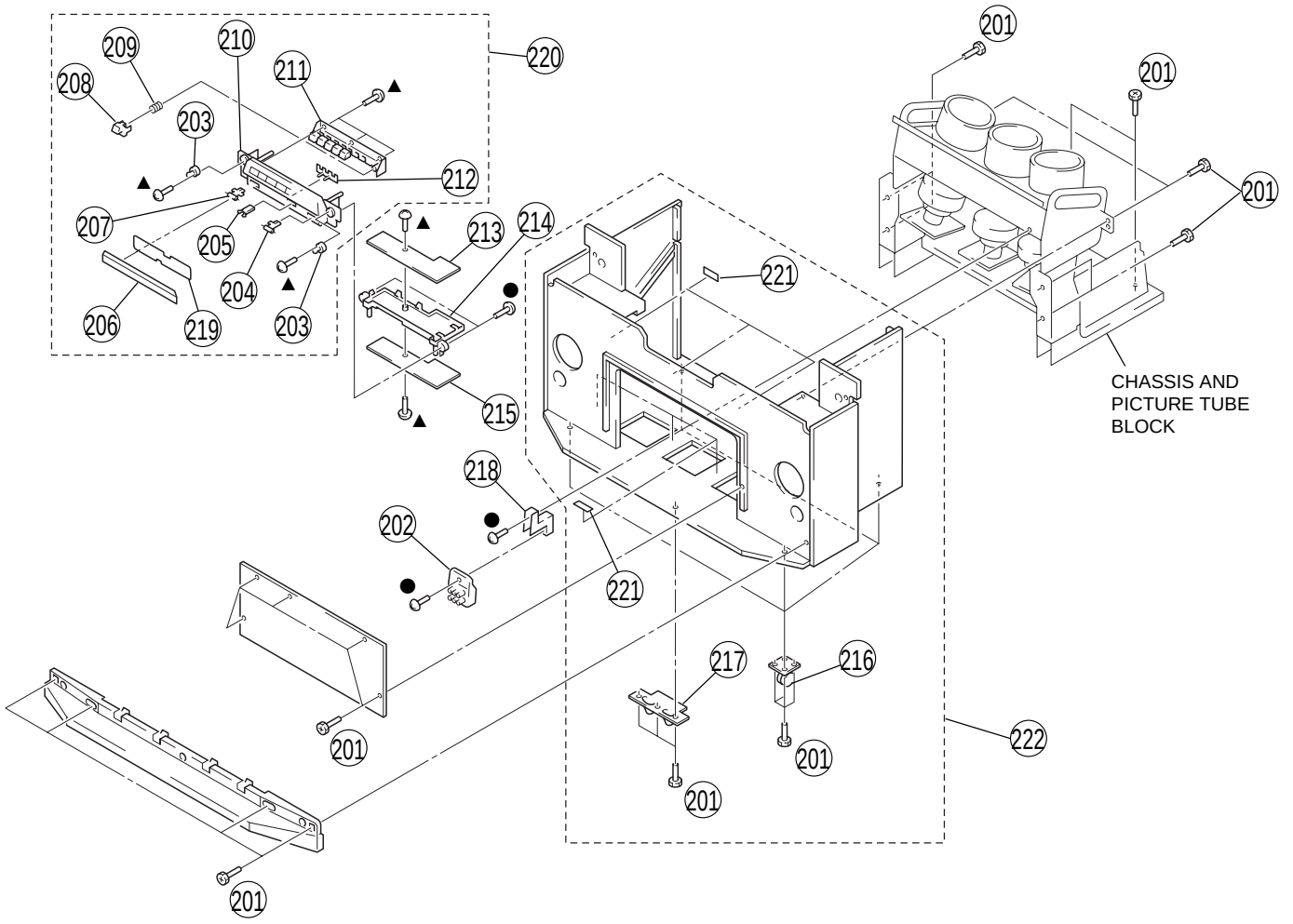

REF. NO.	PART NO.	DESCRIPTION	REMARK
201	4-378-522-31	SCREW, TAPPING, HEXAGON HEAD	
202	⚠ 1-223-925-11	RESISTOR ASSY (HIGH-VOLTAGE)	
203	4-843-806-00	STRIKE	
204	4-045-250-21	DAMPER	
205	4-047-464-01	CATCHER, PUSH	
206	4-066-140-01	DOOR	
207	3-703-035-11	SHAFT, LID	
208	4-066-131-01	BUTTON, POWER	
209	4-066-103-01	SPRING, COMPRESSION	
210	4-066-136-01	PANEL, CONTROL	
211	4-066-141-01	BUTTON, MULTI	
212	4-066-130-01	GUIDE, LIGHT	
213	* A-1372-518-A	H1 MOUNT	
214	* 4-066-133-01	BRACKET (H)	
215	* A-1375-177-A	H2 COMPL	
216	4-040-755-01	CASTER (DIA. 30)	
217	4-048-175-01	FOOT, PLASTIC	
218	* 4-054-825-01	BRACKET, FOCUS PACK	
219	4-066-112-01	LABEL, CONTROL	
220	X-4035-946-3	PANEL ASSY, CONTROL	203-212,219
221	4-069-915-01	CLAMP	
222	* X-4036-614-1	CABINET (48) ASSY	201,216,217,221

7-6. CHASSIS AND PICTURE TUBE BLOCK (KP-EF48)

The components identified by shading and mark ⚠ are critical for safety.
Replace only with part number specified.

● : 7-685-663-71 +BVTP 4X16
▲ : 7-685-648-79 +BVTP 3X12

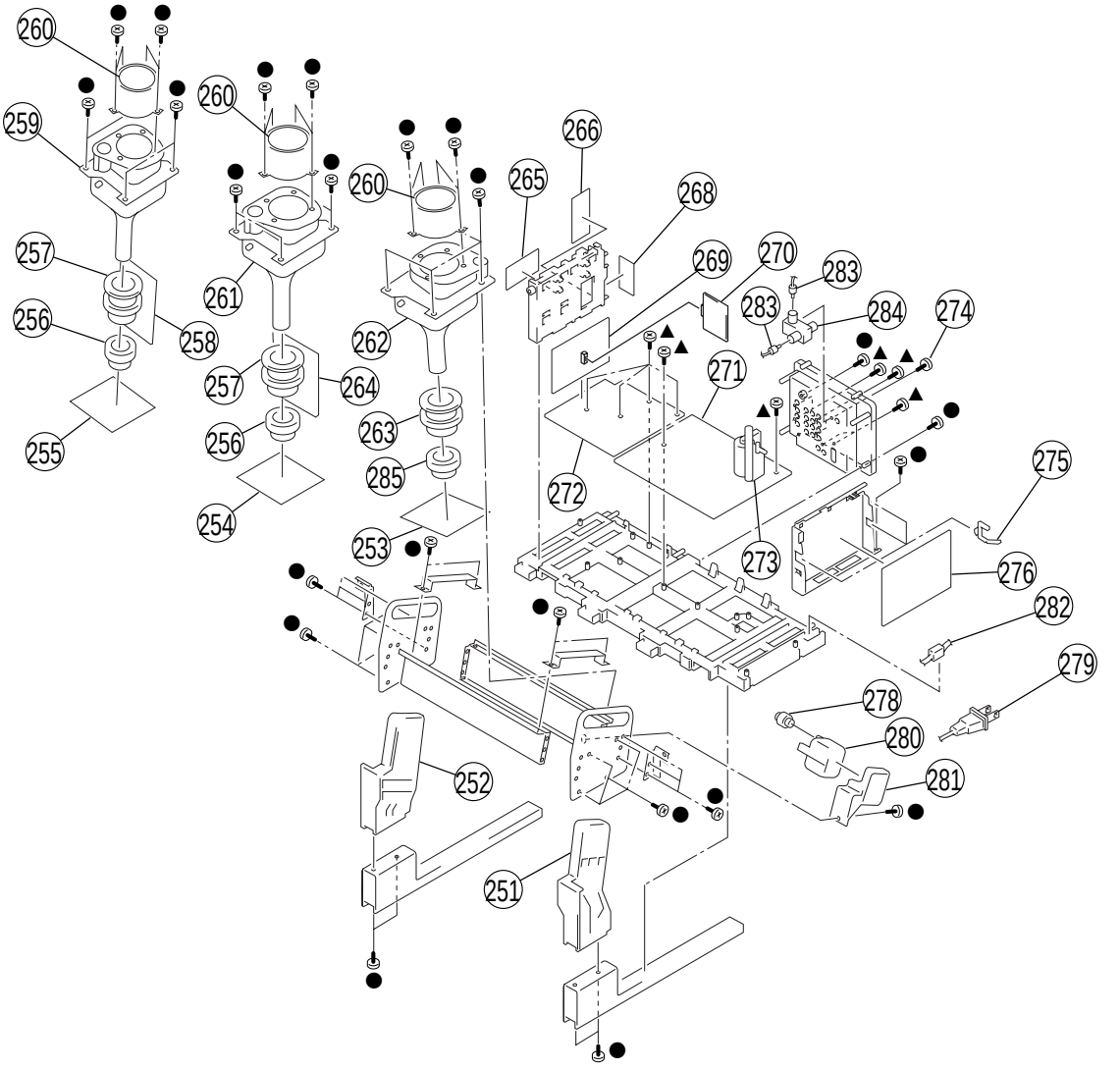

REF. NO.	PART NO.	DESCRIPTION	REMARK
251	* 4-066-135-01	STAY (R), SIDE	
252	* 4-066-134-01	STAY (L), SIDE	
253	* A-1331-834-A	CB MOUNT	
254	* A-1331-833-A	CG MOUNT	
255	* A-1331-835-A	CR MOUNT	
256	⚠ 1-452-790-11	NECK ASSY	
257	⚠ 1-451-455-51	DEFLECTION YOKE (G)(R)	
258	* A-1390-876-A	ZR MOUNT	
259	⚠ 8-733-572-05	PICTURE TUBE 07MXC3(R)(DIAPHRAGM)	
260	4-056-258-01	LENS (DELTA 78)	
261	⚠ 8-733-570-05	PICTURE TUBE 07MXC2(G)(DIAPHRAGM)	
262	⚠ 8-733-575-05	PICTURE TUBE 07MAC3(B)(DIAPHRAGM)	
263	⚠ 1-451-455-61	DEFLECTION YOKE (B)	
264	* A-1390-877-A	ZG MOUNT	
265	* A-1342-428-A	V2 MOUNT	
266	* A-1190-325-A	P1 MOUNT	
268	* A-1373-691-A	UG MOUNT	
269	* A-1298-632-A	AG COMPL (EF48MN2,HK2,SN2)	
269	* A-1298-673-A	AG COMPL (EF48ME2)	
270	* A-1390-891-A	S MOUNT	
271	* A-1346-829-A	E COMPL	
272	* A-1346-763-A	D COMPL	
273	⚠ 1-453-307-11	FBT ASSY NX-4007//M3T4	
274	4-382-854-11	SCREW (M3X10), P, SW (+)	
275	* 4-316-015-00	HOLDER, WIRE	
276	* A-1316-394-A	G COMPL	
278	4-373-137-01	CAP (Z), RUBBER	
279	⚠ 1-574-062-61	CORD, POWER (WITH CONNECTOR) 2.5A/250V (EF48MN2,ME2)	
279	⚠ 1-574-358-51	CORD, POWER (WITH CONNECTOR) (EF48SN2)	
279	⚠ 1-769-609-21	CORD, POWER (WITH CONNECTOR) (EF48HK2)	
280	⚠ 8-598-955-12	BLOCK ASSY, HIGH-VOLTAGE	
281	* 4-066-144-01	HOLDER, HVR	
282	4-022-115-00	HOLDER, AC CORD	
283	* 1-555-400-00	CABLE, PIN	
284	1-251-372-21	BOOSTER, RF	
285	⚠ 1-452-909-31	MAGNET ASSY, 4 POLE	

7-7. SCREEN AND COVER BLOCK (KP-EF53)

○ : 7-685-663-79 +BVTP 4X16
■ : 7-685-661-79 +BVTP 4X12

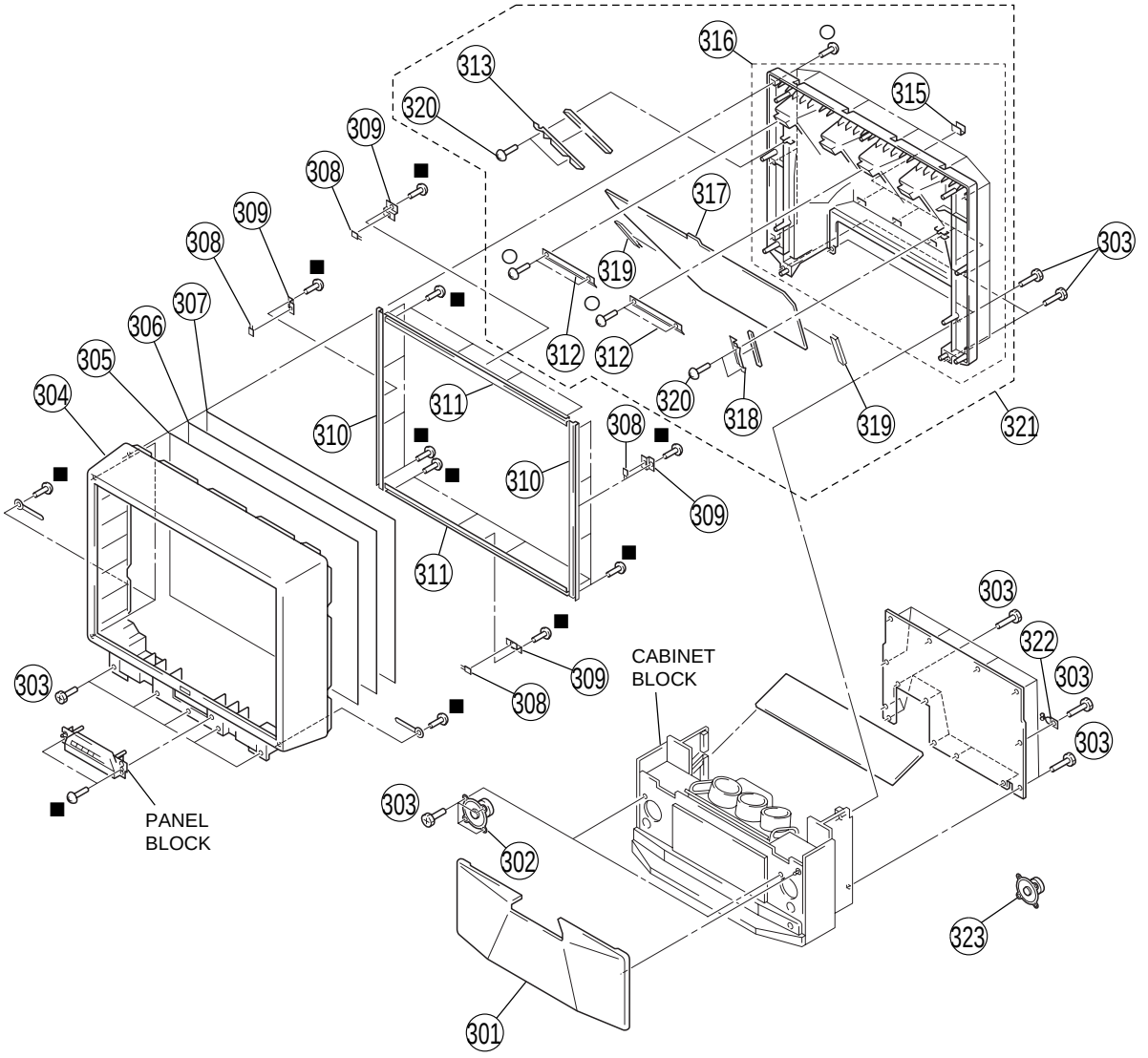

REF. NO.	PART NO.	DESCRIPTION	REMARK
301	X-4035-511-1	GRILLE ASSY, SPEAKER	
302	1-529-405-11	SPEAKER (16CM)	
303	4-378-522-31	SCREW, TAPPING, HEXAGON HEAD	
304	X-4036-625-1	BEZNET (53) ASSY	
305	4-064-186-01	SCREEN (53), CONTRAST	
306	4-070-234-11	PLATE (L), DIFFUSION	
307	4-070-282-11	PLATE (F), DIFFUSION	
308	1-528-864-11	BATTERY, SOLAR	
309	* 4-066-132-01	HOLDER, SENSOR	
310	* 4-064-189-01	HOLDER (V53), SCREEN	
311	* 4-064-052-01	HOLDER (H), SCREEN	
312	4-064-042-01	HOLDER, MIRROR	
313	* 4-051-790-02	HOLDER, MIRSD (L)	
315	4-048-150-01	CAP, HOLE	
316	* X-4032-620-1	COVER ASSY, MIRROR	315
317	4-070-036-01	MIRROR (53)	
318	* 4-051-789-02	HOLDER, MIRSD (R)	
319	4-033-775-41	PROTECTOR, MIRROR	
320	4-304-851-11	SCREW (4X25), (+) PWH TAPPING	
321	* A-1501-480-A	COVER ASSY, MIRROR	312-313,315-320
322	3-703-319-01	PURSE LOCK (DIA.15)	
323	1-529-404-11	SPEAKER (5CM)	

7-8. CABINET AND PANEL BLOCK (KP-EF53)

The components identified by shading and mark ⚠ are critical for safety.
Replace only with part number specified.

● : 7-685-663-71 +BVTP 4X16
▲ : 7-685-648-79 +BVTP 3X12

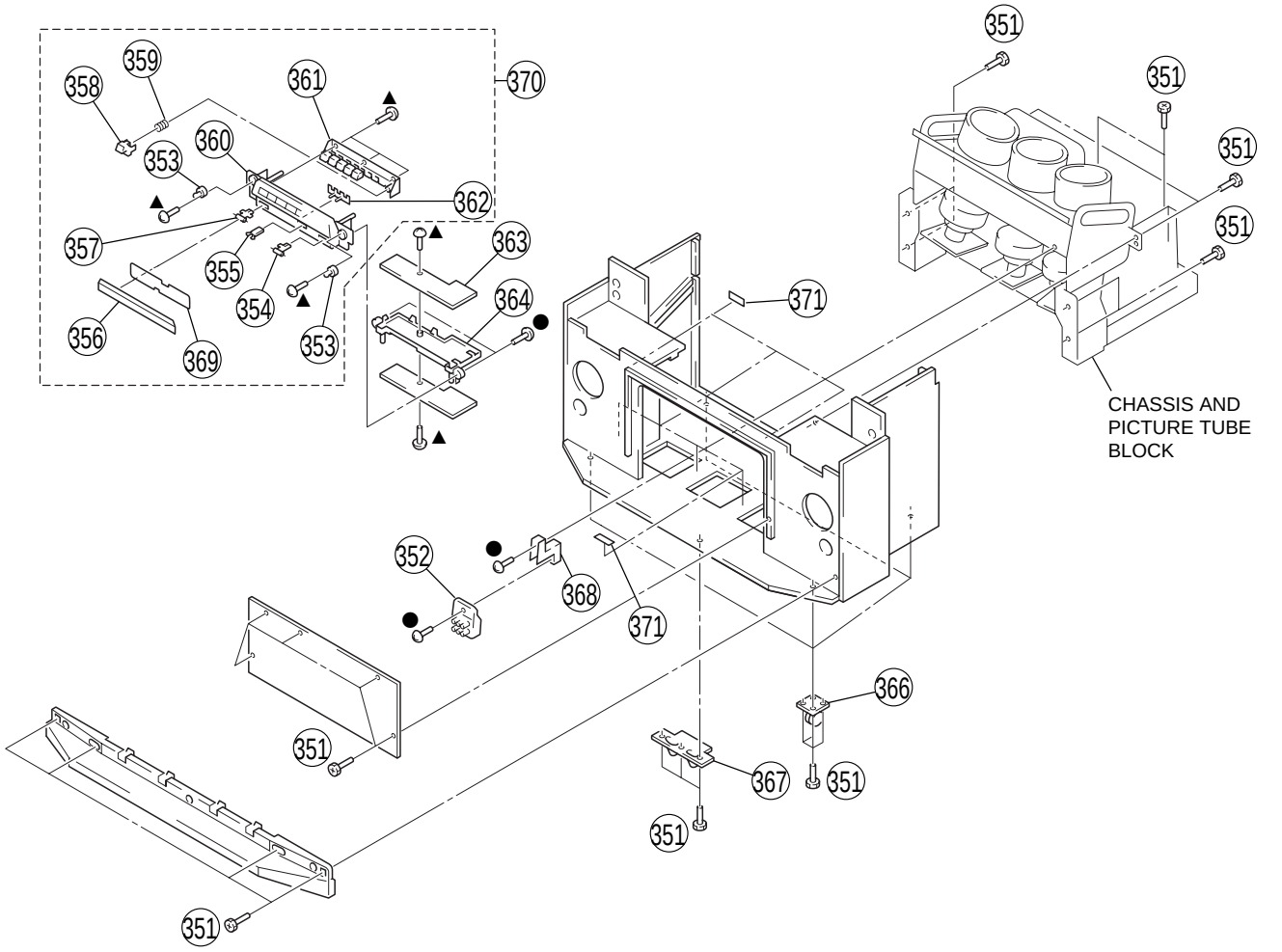

REF. NO.	PART NO.	DESCRIPTION	REMARK
351	4-378-522-31	SCREW, TAPPING, HEXAGON HEAD	
352	⚠ 1-223-925-11	RESISTOR ASSY (HIGH-VOLTAGE)	
353	4-843-806-00	STRIKE	
354	4-045-250-21	DAMPER	
355	4-047-464-01	CATCHER, PUSH	
356	4-066-140-01	DOOR	
357	3-703-035-11	SHAFT, LID	
358	4-066-131-01	BUTTON, POWER	
359	4-066-103-01	SPRING, COMPRESSION	
360	4-066-136-01	PANEL, CONTROL	
361	4-066-141-01	BUTTON, MULTI	
362	4-066-130-01	GUIDE, LIGHT	
363	* A-1372-518-A	H1 MOUNT	
364	* 4-066-133-01	BRACKET (H)	
365	* A-1375-177-A	H2 COMPL	
366	4-040-755-01	CASTER (DIA. 30)	
367	4-048-175-01	FOOT, PLASTIC	
368	* 4-054-825-01	BRACKET, FOCUS PACK	
369	4-066-112-01	LABEL, CONTROL	
370	X-4035-946-3	PANEL ASSY, CONTROL	353-362,369
371	4-069-915-01	CLAMP	

The components identified by shading and mark ⚠ are critical for safety.
Replace only with part number specified.

7-9. CHASSIS AND PICTURE TUBE BLOCK (KP-EF53)

● : 7-685-663-71 +BVTP 4X16
▲ : 7-685-648-79 +BVTP 3X12

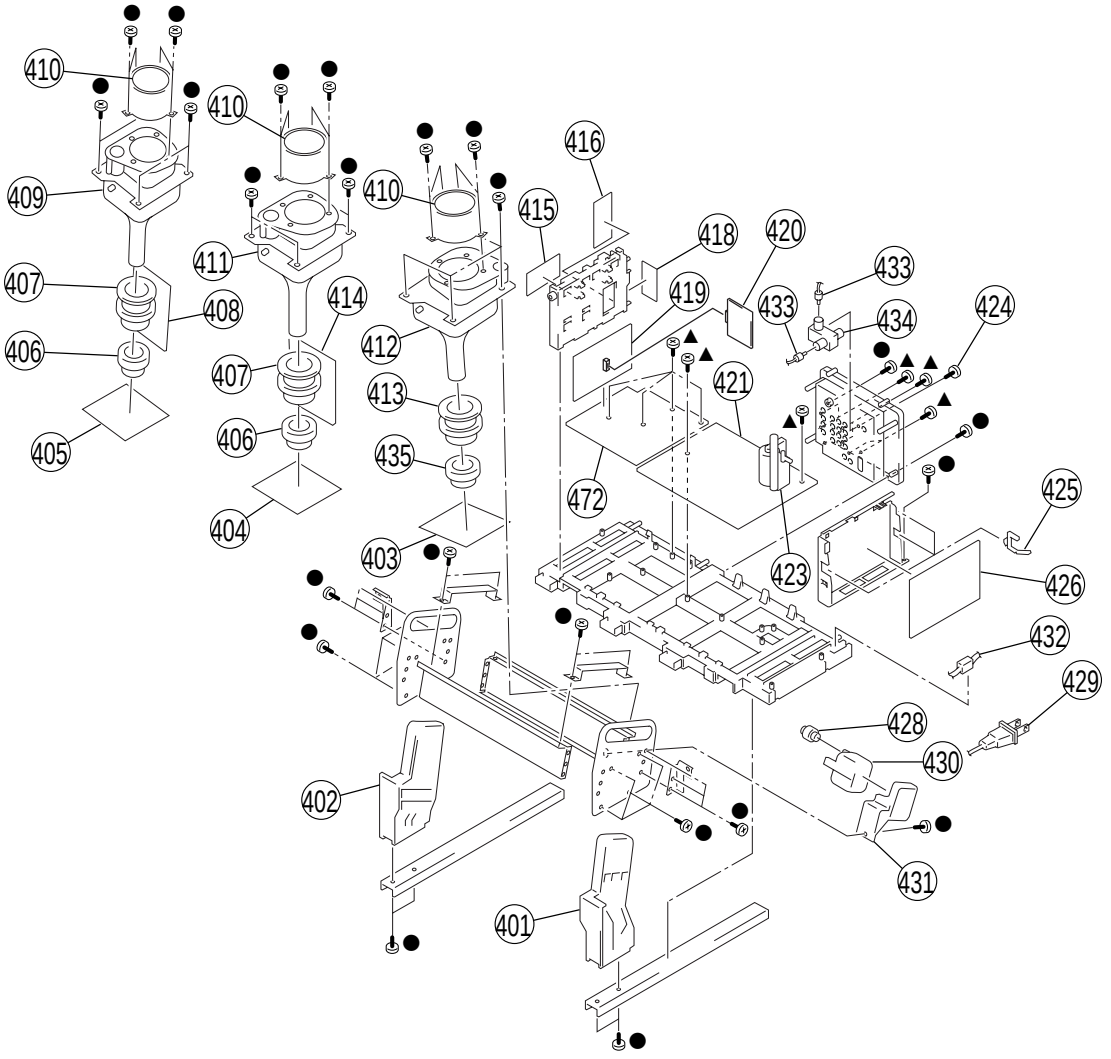

REF. NO.	PART NO.	DESCRIPTION	REMARK
401	* 4-066-135-01	STAY (R), SIDE	
402	* 4-066-134-01	STAY (L), SIDE	
403	* A-1331-834-A	CB MOUNT	
404	* A-1331-833-A	CG MOUNT	
405	* A-1331-835-A	CR MOUNT	
406	⚠ 1-452-790-11	NECK ASSY	
407	⚠ 1-451-455-51	DEFLECTION YOKE (G)(R)	
408	* A-1390-876-A	ZR MOUNT	
409	⚠ 8-733-572-05	PICTURE TUBE 07MXC3(R)(DIAPHRAGM)	
410	4-056-258-01	LENS (DELTA 78)	
411	⚠ 8-733-570-05	PICTURE TUBE 07MXC2(G)(DIAPHRAGM)	
412	⚠ 8-733-575-05	PICTURE TUBE 07MAC3(B)(DIAPHRAGM)	
413	⚠ 1-451-455-61	DEFLECTION YOKE (B)	
414	* A-1390-877-A	ZG MOUNT	
415	* A-1342-428-A	V2 MOUNT	
416	* A-1190-325-A	P1 MOUNT	
418	* A-1373-691-A	UG MOUNT	

REF. NO.	PART NO.	DESCRIPTION	REMARK
419	* A-1298-632-A	AG COMPL (EF53MN2,HK2,SN2)	
419	* A-1298-673-A	AG COMPL (EF53ME2)	
420	* A-1390-891-A	S MOUNT	
421	* A-1346-829-A	E COMPL	
422	* A-1346-763-A	D COMPL	
423	⚠ 1-453-307-11	FBT ASSY NX-4007//M3T4	
424	4-382-854-11	SCREW (M3X10), P, SW (+)	
425	* 4-316-015-00	HOLDER, WIRE	
426	* A-1316-394-A	G COMPL	
428	4-373-137-01	CAP (Z), RUBBER	
429	⚠ 1-574-062-61	CORD, POWER (WITH CONNECTOR) 2.5A/250V	
430	⚠ 8-598-955-12	BLOCK ASSY, HIGH-VOLTAGE	
431	* 4-066-144-01	HOLDER, HVR	
432	4-022-115-00	HOLDER, AC CORD	
433	* 1-555-400-00	CABLE, PIN	
434	1-251-372-21	BOOSTER, RF	
435	⚠ 1-452-909-31	MAGNET ASSY, 4POLE	

P1

SECTION 8
ELECTRICAL PARTS LIST

NOTE:

The components identified by shading and mark ⚠ are critical for safety.
Replace only with part number specified.

- The components identified by ⋈ in this manual have been carefully factory-selected for each set in order to satisfy regulations regarding X-ray radiation. Should replacement be required, replace only with the value originally used.
- Items marked " * " are not stocked since they are seldom required for routine service. Some delay should be anticipated when ordering these items.
- All variable and adjustable resistors have characteristic curve B, unless otherwise noted.

RESISTORS
- All resistors are in ohms
- F : nonflammable

When indicating parts by reference number, please include the board name.

- CAPACITORS
  PF : μμ F
- There are some cases the reference number on one board overlaps on the other board. Therefore, when ordering parts by the reference number, please include the board name.

REF. NO.	PART NO.	DESCRIPTION			REMARK
	* A-1190-325-A	P1 MOUNT			
		**********			
		<CAPACITOR>			
C2301	1-163-038-00	CERAMIC CHIP	0.1MF		25V
C2302	1-104-664-11	ELECT	47MF	20%	25V
C2303	1-163-038-00	CERAMIC CHIP	0.1MF		25V
C2304	1-104-664-11	ELECT	47MF	20%	25V
C2305	1-164-232-11	CERAMIC CHIP	0.01MF	10%	50V
C2306	1-164-232-11	CERAMIC CHIP	0.01MF	10%	50V
C2307	1-163-038-00	CERAMIC CHIP	0.1MF		25V
C2308	1-163-038-00	CERAMIC CHIP	0.1MF		25V
C2309	1-163-038-00	CERAMIC CHIP	0.1MF		25V
C2310	1-104-664-11	ELECT	47MF	20%	25V
C2311	1-163-038-00	CERAMIC CHIP	0.1MF		25V
C2312	1-164-005-11	CERAMIC CHIP	0.47MF		25V
C2313	1-163-038-00	CERAMIC CHIP	0.1MF		25V
C2402	1-163-038-00	CERAMIC CHIP	0.1MF		25V
C2403	1-104-664-11	ELECT	47MF	20%	25V
C2405	1-164-346-11	CERAMIC CHIP	1MF		16V
C2406	1-163-038-00	CERAMIC CHIP	0.1MF		25V
C2407	1-126-964-11	ELECT	10MF	20%	50V
C2413	1-164-005-11	CERAMIC CHIP	0.47MF		25V
C2415	1-164-232-11	CERAMIC CHIP	0.01MF	10%	50V
C2416	1-163-001-11	CERAMIC CHIP	220PF	10%	50V
C2417	1-163-038-00	CERAMIC CHIP	0.1MF		25V
C2418	1-163-038-00	CERAMIC CHIP	0.1MF		25V
C2419	1-104-665-11	ELECT	100MF	20%	10V
C2420	1-164-004-11	CERAMIC CHIP	0.1MF	10%	25V
C2421	1-164-343-11	CERAMIC CHIP	0.056MF	10%	25V
C2423	1-164-346-11	CERAMIC CHIP	1MF		16V
C2424	1-163-275-11	CERAMIC CHIP	1000PF	5%	50V
C2425	1-104-664-11	ELECT	47MF	20%	25V
C2426	1-163-038-00	CERAMIC CHIP	0.1MF		25V
C2427	1-163-251-11	CERAMIC CHIP	100PF	5%	50V
C2428	1-163-038-00	CERAMIC CHIP	0.1MF		25V
C2429	1-163-017-00	CERAMIC CHIP	0.0047MF	10%	50V
C2430	1-163-038-00	CERAMIC CHIP	0.1MF		25V
C2431	1-164-346-11	CERAMIC CHIP	1MF		16V
C2432	1-164-346-11	CERAMIC CHIP	1MF		16V
C2433	1-164-346-11	CERAMIC CHIP	1MF		16V
C2434	1-163-251-11	CERAMIC CHIP	100PF	5%	50V
C2435	1-163-038-00	CERAMIC CHIP	0.1MF		25V
C2436	1-164-346-11	CERAMIC CHIP	1MF		16V
C2437	1-163-249-11	CERAMIC CHIP	82PF	5%	50V
C2438	1-115-339-11	CERAMIC CHIP	0.1MF	10%	50V
C2439	1-164-346-11	CERAMIC CHIP	1MF		16V
C2440	1-164-346-11	CERAMIC CHIP	1MF		16V
C2442	1-163-038-00	CERAMIC CHIP	0.1MF		25V
C2443	1-104-665-11	ELECT	100MF	20%	10V

REF. NO.	PART NO.	DESCRIPTION			REMARK
C2444	1-163-038-00	CERAMIC CHIP	0.1MF		25V
C2445	1-163-038-00	CERAMIC CHIP	0.1MF		25V
C2446	1-164-346-11	CERAMIC CHIP	1MF		16V
C2447	1-126-933-11	ELECT	100MF	20%	16V
C2448	1-163-251-11	CERAMIC CHIP	100PF	5%	50V
C2449	1-104-665-11	ELECT	100MF	20%	10V
C2450	1-163-038-00	CERAMIC CHIP	0.1MF		25V
C2451	1-104-664-11	ELECT	47MF	20%	25V
C2452	1-163-038-00	CERAMIC CHIP	0.1MF		25V
C2453	1-163-038-00	CERAMIC CHIP	0.1MF		25V
C2454	1-163-037-11	CERAMIC CHIP	0.022MF	10%	50V
C2455	1-163-038-00	CERAMIC CHIP	0.1MF		25V
C2456	1-163-038-00	CERAMIC CHIP	0.1MF		25V
C2457	1-104-665-11	ELECT	100MF	20%	10V
C2458	1-163-017-00	CERAMIC CHIP	0.0047MF	10%	50V
C2459	1-163-037-11	CERAMIC CHIP	0.022MF	10%	50V
C2460	1-163-038-00	CERAMIC CHIP	0.1MF		25V
C2461	1-163-235-11	CERAMIC CHIP	22PF	5%	50V
C2463	1-163-237-11	CERAMIC CHIP	27PF	5%	50V
C2464	1-163-231-11	CERAMIC CHIP	15PF	5%	50V
C2465	1-163-038-00	CERAMIC CHIP	0.1MF		25V
C2466	1-163-231-11	CERAMIC CHIP	15PF	5%	50V
C2467	1-163-038-00	CERAMIC CHIP	0.1MF		25V
C2468	1-163-038-00	CERAMIC CHIP	0.1MF		25V
C2469	1-163-038-00	CERAMIC CHIP	0.1MF		25V
C2470	1-104-665-11	ELECT	100MF	20%	10V
C2471	1-164-004-11	CERAMIC CHIP	0.1MF	10%	25V
C2472	1-164-346-11	CERAMIC CHIP	1MF		16V
C2473	1-163-038-00	CERAMIC CHIP	0.1MF		25V
C2474	1-104-664-11	ELECT	47MF	20%	25V
C2476	1-163-251-11	CERAMIC CHIP	100PF	5%	50V
C2478	1-163-121-00	CERAMIC CHIP	150PF	5%	50V
C2480	1-163-038-00	CERAMIC CHIP	0.1MF		25V
C2481	1-104-664-11	ELECT	47MF	20%	25V
C2482	1-104-665-11	ELECT	100MF	20%	10V
C2483	1-163-038-00	CERAMIC CHIP	0.1MF		25V
C2484	1-164-346-11	CERAMIC CHIP	1MF		16V
C2485	1-164-346-11	CERAMIC CHIP	1MF		16V
C2486	1-164-346-11	CERAMIC CHIP	1MF		16V
C2801	1-163-038-00	CERAMIC CHIP	0.1MF		25V
C2802	1-104-664-11	ELECT	47MF	20%	25V
C2803	1-163-038-00	CERAMIC CHIP	0.1MF		25V
C2804	1-104-664-11	ELECT	47MF	20%	25V
C2805	1-163-038-00	CERAMIC CHIP	0.1MF		25V
C2806	1-126-967-11	ELECT	47MF	20%	50V
C2807	1-163-251-11	CERAMIC CHIP	100PF	5%	50V
C2808	1-163-243-11	CERAMIC CHIP	47PF	5%	50V
C2809	1-163-251-11	CERAMIC CHIP	100PF	5%	50V
C2810	1-163-243-11	CERAMIC CHIP	47PF	5%	50V
C2811	1-164-346-11	CERAMIC CHIP	1MF		16V
C2812	1-164-346-11	CERAMIC CHIP	1MF		16V

REF. NO.	PART NO.	DESCRIPTION	REMARK
C2813	1-126-964-11	ELECT 10MF 20% 50V	
		<CONNECTOR>	
CN2301	* 1-564-515-11	PLUG, CONNECTOR 12P	
CN2401	* 1-564-508-11	PLUG, CONNECTOR 5P	
CN2402	* 1-564-596-11	PLUG, CONNECTOR 15P	
CN2801	* 1-564-509-11	PLUG, CONNECTOR 6P	
		<DIODE>	
D2401	8-719-047-16	DIODE BAS216	
		<FERRITE BEAD>	
FB2401	1-414-235-11	INDUCTOR CHIP 0UH	
FB2402	1-414-235-11	INDUCTOR CHIP 0UH	
		<FILTER>	
FL2301	1-236-071-11	ENCAPSULATED COMPONENT	
FL2302	1-236-071-11	ENCAPSULATED COMPONENT	
FL2303	1-236-071-11	ENCAPSULATED COMPONENT	
		<IC>	
IC2401	8-759-439-64	IC HEF4053BT	
IC2402	8-759-565-20	IC TDA4665T/V5-118	
IC2403	8-759-248-15	IC SDA9187-2XGEG	
IC2404	8-759-468-94	IC SDA9189XGEGA132	
IC2405	8-759-183-35	IC TDA9160A	
IC2406	8-759-278-95	IC BA7606F	
IC2801	8-752-072-94	IC CXA1875AM-T4	
IC2802	8-759-439-64	IC HEF4053BT	
IC2803	8-759-439-64	IC HEF4053BT	
		<COIL>	
L2301	1-408-603-31	INDUCTOR 10UH	
L2401	1-408-603-31	INDUCTOR 10UH	
L2402	1-408-603-31	INDUCTOR 10UH	
L2403	1-408-603-31	INDUCTOR 10UH	
L2404	1-408-603-31	INDUCTOR 10UH	
L2405	1-408-603-31	INDUCTOR 10UH	
L2406	1-408-603-31	INDUCTOR 10UH	
L2407	1-410-384-31	INDUCTOR CHIP 18UH	
L2408	1-408-603-31	INDUCTOR 10UH	
L2409	1-410-210-21	INDUCTOR CHIP 33UH	
L2410	1-408-603-31	INDUCTOR 10UH	
L2801	1-414-194-11	INDUCTOR 33UH	
L2802	1-412-010-41	INDUCTOR CHIP 22UH	
L2803	1-414-194-11	INDUCTOR 33UH	
L2804	1-412-010-41	INDUCTOR CHIP 22UH	
		<TRANSISTOR>	
Q2301	8-729-120-28	TRANSISTOR 2SC1623-L5L6	
Q2401	8-729-026-49	TRANSISTOR 2SA1037AK-T146-R	
Q2402	8-729-120-28	TRANSISTOR 2SC1623-L5L6	
Q2403	8-729-120-28	TRANSISTOR 2SC1623-L5L6	
Q2404	8-729-120-28	TRANSISTOR 2SC1623-L5L6	
Q2405	8-729-026-49	TRANSISTOR 2SA1037AK-T146-R	
Q2406	8-729-120-28	TRANSISTOR 2SC1623-L5L6	
Q2407	8-729-026-49	TRANSISTOR 2SA1037AK-T146-R	
Q2408	8-729-120-28	TRANSISTOR 2SC1623-L5L6	
Q2409	8-729-120-28	TRANSISTOR 2SC1623-L5L6	
Q2410	8-729-120-28	TRANSISTOR 2SC1623-L5L6	
Q2411	8-729-026-49	TRANSISTOR 2SA1037AK-T146-R	

REF. NO.	PART NO.	DESCRIPTION	REMARK
Q2412	1-801-806-11	TRANSISTOR DTC144EKA-T146	
Q2413	8-729-901-00	TRANSISTOR DTC124EK	
Q2414	8-729-120-28	TRANSISTOR 2SC1623-L5L6	
Q2415	8-729-026-49	TRANSISTOR 2SA1037AK-T146-R	
Q2416	8-729-026-49	TRANSISTOR 2SA1037AK-T146-R	
Q2417	8-729-026-49	TRANSISTOR 2SA1037AK-T146-R	
Q2418	8-729-026-49	TRANSISTOR 2SA1037AK-T146-R	
Q2419	8-729-026-49	TRANSISTOR 2SA1037AK-T146-R	
Q2420	8-729-026-49	TRANSISTOR 2SA1037AK-T146-R	
Q2421	8-729-120-28	TRANSISTOR 2SC1623-L5L6	
Q2422	8-729-120-28	TRANSISTOR 2SC1623-L5L6	
Q2423	8-729-900-53	TRANSISTOR DTC114EK	
Q2424	8-729-120-28	TRANSISTOR 2SC1623-L5L6	
Q2426	8-729-120-28	TRANSISTOR 2SC1623-L5L6	
Q2427	8-729-026-49	TRANSISTOR 2SA1037AK-T146-R	
Q2428	8-729-026-49	TRANSISTOR 2SA1037AK-T146-R	
Q2429	8-729-026-49	TRANSISTOR 2SA1037AK-T146-R	
Q2430	8-729-026-49	TRANSISTOR 2SA1037AK-T146-R	
Q2431	8-729-026-49	TRANSISTOR 2SA1037AK-T146-R	
Q2432	8-729-026-49	TRANSISTOR 2SA1037AK-T146-R	
Q2801	8-729-120-28	TRANSISTOR 2SC1623-L5L6	
Q2802	8-729-120-28	TRANSISTOR 2SC1623-L5L6	
Q2803	8-729-120-28	TRANSISTOR 2SC1623-L5L6	
Q2804	8-729-120-28	TRANSISTOR 2SC1623-L5L6	
Q2805	8-729-026-49	TRANSISTOR 2SA1037AK-T146-R	
Q2806	8-729-120-28	TRANSISTOR 2SC1623-L5L6	
Q2807	8-729-120-28	TRANSISTOR 2SC1623-L5L6	
Q2808	8-729-120-28	TRANSISTOR 2SC1623-L5L6	
Q2809	8-729-120-28	TRANSISTOR 2SC1623-L5L6	
Q2810	8-729-120-28	TRANSISTOR 2SC1623-L5L6	
		<RESISTOR>	
R2301	1-216-025-00	RES,CHIP 100 5% 1/10W	
R2302	1-216-025-00	RES,CHIP 100 5% 1/10W	
R2303	1-216-049-00	RES,CHIP 1K 5% 1/10W	
R2305	1-216-025-00	RES,CHIP 100 5% 1/10W	
R2306	1-216-049-00	RES,CHIP 1K 5% 1/10W	
R2307	1-216-049-00	RES,CHIP 1K 5% 1/10W	
R2308	1-216-049-00	RES,CHIP 1K 5% 1/10W	
R2402	1-216-073-00	RES,CHIP 10K 5% 1/10W	
R2403	1-216-105-00	RES,CHIP 220K 5% 1/10W	
R2404	1-216-049-00	RES,CHIP 1K 5% 1/10W	
R2405	1-216-059-00	RES,CHIP 2.7K 5% 1/10W	
R2406	1-216-057-00	RES,CHIP 2.2K 5% 1/10W	
R2407	1-216-039-00	RES,CHIP 390 5% 1/10W	
R2408	1-216-049-00	RES,CHIP 1K 5% 1/10W	
R2409	1-216-033-00	RES,CHIP 220 5% 1/10W	
R2411	1-216-057-00	RES,CHIP 2.2K 5% 1/10W	
R2412	1-216-031-00	RES,CHIP 180 5% 1/10W	
R2413	1-216-049-00	RES,CHIP 1K 5% 1/10W	
R2414	1-216-033-00	RES,CHIP 220 5% 1/10W	
R2415	1-216-101-00	RES,CHIP 150K 5% 1/10W	
R2416	1-216-049-00	RES,CHIP 1K 5% 1/10W	
R2417	1-216-065-00	RES,CHIP 4.7K 5% 1/10W	
R2418	1-216-057-00	RES,CHIP 2.2K 5% 1/10W	
R2419	1-216-049-00	RES,CHIP 1K 5% 1/10W	
R2420	1-216-059-00	RES,CHIP 2.7K 5% 1/10W	
R2421	1-216-057-00	RES,CHIP 2.2K 5% 1/10W	
R2422	1-216-049-00	RES,CHIP 1K 5% 1/10W	
R2423	1-216-049-00	RES,CHIP 1K 5% 1/10W	
R2424	1-216-057-00	RES,CHIP 2.2K 5% 1/10W	
R2425	1-216-047-91	RES,CHIP 820 5% 1/10W	
R2426	1-216-057-00	RES,CHIP 2.2K 5% 1/10W	
R2427	1-216-049-00	RES,CHIP 1K 5% 1/10W	
R2428	1-216-033-00	RES,CHIP 220 5% 1/10W	
R2430	1-216-049-00	RES,CHIP 1K 5% 1/10W	

P1 AG

REF. NO.	PART NO.	DESCRIPTION			REMARK
R2431	1-216-049-00	RES,CHIP	1K	5%	1/10W
R2432	1-216-057-00	RES,CHIP	2.2K	5%	1/10W
R2433	1-216-057-00	RES,CHIP	2.2K	5%	1/10W
R2434	1-216-089-00	RES,CHIP	47K	5%	1/10W
R2435	1-216-049-00	RES,CHIP	1K	5%	1/10W
R2436	1-216-063-91	RES,CHIP	3.9K	5%	1/10W
R2437	1-216-067-00	RES,CHIP	5.6K	5%	1/10W
R2438	1-216-025-00	RES,CHIP	100	5%	1/10W
R2440	1-216-073-00	RES,CHIP	10K	5%	1/10W
R2441	1-216-025-00	RES,CHIP	100	5%	1/10W
R2442	1-216-295-00	SHORT	0		
R2443	1-216-097-00	RES,CHIP	100K	5%	1/10W
R2444	1-216-053-00	RES,CHIP	1.5K	5%	1/10W
R2445	1-216-049-00	RES,CHIP	1K	5%	1/10W
R2446	1-216-083-00	RES,CHIP	27K	5%	1/10W
R2447	1-216-049-00	RES,CHIP	1K	5%	1/10W
R2448	1-216-047-91	RES,CHIP	820	5%	1/10W
R2449	1-216-045-00	RES,CHIP	680	5%	1/10W
R2450	1-216-083-00	RES,CHIP	27K	5%	1/10W
R2451	1-216-647-11	METAL CHIP	680	0.50%	1/10W
R2452	1-216-049-00	RES,CHIP	1K	5%	1/10W
R2453	1-216-073-00	RES,CHIP	10K	5%	1/10W
R2454	1-216-689-11	RES,CHIP	39K	5%	1/10W
R2455	1-216-047-91	RES,CHIP	820	5%	1/10W
R2456	1-216-045-00	RES,CHIP	680	5%	1/10W
R2457	1-216-649-11	METAL CHIP	820	0.50%	1/10W
R2458	1-216-001-00	RES,CHIP	10	5%	1/10W
R2459	1-216-053-00	RES,CHIP	1.5K	5%	1/10W
R2460	1-216-049-00	RES,CHIP	1K	5%	1/10W
R2461	1-216-051-00	RES,CHIP	1.2K	5%	1/10W
R2462	1-216-670-11	METAL CHIP	6.2K	0.50%	1/10W
R2463	1-216-645-11	METAL CHIP	560	0.50%	1/10W
R2464	1-216-053-00	RES,CHIP	1.5K	5%	1/10W
R2465	1-216-073-00	RES,CHIP	10K	5%	1/10W
R2466	1-216-025-00	RES,CHIP	100	5%	1/10W
R2467	1-216-001-00	RES,CHIP	10	5%	1/10W
R2468	1-216-025-00	RES,CHIP	100	5%	1/10W
R2469	1-216-025-00	RES,CHIP	100	5%	1/10W
R2470	1-216-097-00	RES,CHIP	100K	5%	1/10W
R2472	1-216-109-00	RES,CHIP	330K	5%	1/10W
R2473	1-216-049-00	RES,CHIP	1K	5%	1/10W
R2474	1-216-057-00	RES,CHIP	2.2K	5%	1/10W
R2475	1-216-039-00	RES,CHIP	390	5%	1/10W
R2476	1-216-295-00	SHORT	0		
R2477	1-216-295-00	SHORT	0		
R2478	1-216-065-00	RES,CHIP	4.7K	5%	1/10W
R2479	1-216-057-00	RES,CHIP	2.2K	5%	1/10W
R2480	1-216-105-00	RES,CHIP	220K	5%	1/10W
R2481	1-216-051-00	RES,CHIP	1.2K	5%	1/10W
R2483	1-216-041-00	RES,CHIP	470	5%	1/10W
R2484	1-216-081-00	RES,CHIP	22K	5%	1/10W
R2485	1-216-025-00	RES,CHIP	100	5%	1/10W
R2486	1-216-081-00	RES,CHIP	22K	5%	1/10W
R2487	1-216-049-00	RES,CHIP	1K	5%	1/10W
R2488	1-216-025-00	RES,CHIP	100	5%	1/10W
R2489	1-216-065-00	RES,CHIP	4.7K	5%	1/10W
R2490	1-216-025-00	RES,CHIP	100	5%	1/10W
R2491	1-216-049-00	RES,CHIP	1K	5%	1/10W
R2492	1-216-025-00	RES,CHIP	100	5%	1/10W
R2493	1-216-049-00	RES,CHIP	1K	5%	1/10W
R2494	1-216-295-00	SHORT	0		
R2495	1-216-025-00	RES,CHIP	100	5%	1/10W
R2496	1-216-057-00	RES,CHIP	2.2K	5%	1/10W
R2497	1-216-057-00	RES,CHIP	2.2K	5%	1/10W
R2498	1-216-057-00	RES,CHIP	2.2K	5%	1/10W
R2499	1-216-025-00	RES,CHIP	100	5%	1/10W
R2500	1-216-295-00	SHORT	0		

REF. NO.	PART NO.	DESCRIPTION			REMARK
R2501	1-216-025-00	RES,CHIP	100	5%	1/10W
R2502	1-216-025-00	RES,CHIP	100	5%	1/10W
R2503	1-216-025-00	RES,CHIP	100	5%	1/10W
R2801	1-216-059-00	RES,CHIP	2.7K	5%	1/10W
R2802	1-216-668-11	METAL CHIP	5.1K	0.50%	1/10W
R2803	1-216-057-00	RES,CHIP	2.2K	5%	1/10W
R2804	1-216-091-00	RES,CHIP	56K	5%	1/10W
R2805	1-216-081-00	RES,CHIP	22K	5%	1/10W
R2806	1-216-061-00	RES,CHIP	3.3K	5%	1/10W
R2807	1-216-069-00	RES,CHIP	6.8K	5%	1/10W
R2808	1-216-057-00	RES,CHIP	2.2K	5%	1/10W
R2809	1-216-093-91	RES,CHIP	68K	5%	1/10W
R2810	1-216-081-00	RES,CHIP	22K	5%	1/10W
R2811	1-216-049-00	RES,CHIP	1K	5%	1/10W
R2812	1-216-045-00	RES,CHIP	680	5%	1/10W
R2813	1-216-295-00	SHORT	0		
R2814	1-216-025-00	RES,CHIP	100	5%	1/10W
R2815	1-216-025-00	RES,CHIP	100	5%	1/10W
R2816	1-216-065-00	RES,CHIP	4.7K	5%	1/10W
R2817	1-216-065-00	RES,CHIP	4.7K	5%	1/10W
R2818	1-216-025-00	RES,CHIP	100	5%	1/10W
R2819	1-216-025-00	RES,CHIP	100	5%	1/10W
R2820	1-216-049-00	RES,CHIP	1K	5%	1/10W
R2821	1-216-049-00	RES,CHIP	1K	5%	1/10W
R2825	1-216-049-00	RES,CHIP	1K	5%	1/10W
R2826	1-216-047-91	RES,CHIP	820	5%	1/10W
R2827	* 1-216-029-00	RES,CHIP	150	5%	1/10W
R2828	1-216-037-00	RES,CHIP	330	5%	1/10W
R2830	1-216-049-00	RES,CHIP	1K	5%	1/10W
R2831	1-216-049-00	RES,CHIP	1K	5%	1/10W
R2832	1-216-049-00	RES,CHIP	1K	5%	1/10W
R2833	1-216-049-00	RES,CHIP	1K	5%	1/10W
R2834	1-216-047-91	RES,CHIP	820	5%	1/10W
R2835	1-216-049-00	RES,CHIP	1K	5%	1/10W
R2836	1-216-689-11	RES,CHIP	39K	5%	1/10W
R2837	1-216-089-00	RES,CHIP	47K	5%	1/10W
R2838	1-216-295-00	SHORT	0		
R2839	1-216-033-00	RES,CHIP	220	5%	1/10W

<TUNER>

TU2301	8-598-373-20	FSS TUNER BTF-FG431	

<CRYSTAL>

X2401	1-760-095-21	VIBRATOR, CRYSTAL	
X2402	1-567-504-11	OSCILLATOR, CRYSTAL	
X2403	1-567-505-11	OSCILLATOR, CRYSTAL	

****

	* A-1298-632-A	AG COMPL (GE/HK/AUS MODEL)			
		**********			
	* A-1298-673-A	AG COMPL (ME MODEL)			
		**********			

<CAPACITOR>

C101	1-126-933-11	ELECT	100MF	20%	16V
C102	1-164-232-11	CERAMIC CHIP	0.01MF	10%	50V
C103	1-163-133-00	CERAMIC CHIP	470PF	5%	50V
C104	1-104-664-11	ELECT	47MF	20%	25V
C105	1-104-664-11	ELECT	47MF	20%	25V
C106	1-163-038-00	CERAMIC CHIP	0.1MF		25V
C107	1-163-038-00	CERAMIC CHIP	0.1MF		25V
C108	1-163-038-00	CERAMIC CHIP	0.1MF		25V
C109	1-164-232-11	CERAMIC CHIP	0.01MF	10%	50V

REF. NO.	PART NO.	DESCRIPTION			REMARK
C110	1-164-232-11	CERAMIC CHIP	0.01MF	10%	50V
C111	1-163-038-00	CERAMIC CHIP	0.1MF		25V
C112	1-163-251-11	CERAMIC CHIP	100PF	5%	50V
C113	1-104-664-11	ELECT	47MF	20%	25V
C114	1-163-038-00	CERAMIC CHIP	0.1MF		25V
C115	1-163-251-11	CERAMIC CHIP	100PF	5%	50V
C116	1-163-251-11	CERAMIC CHIP	100PF	5%	50V
C117	1-163-251-11	CERAMIC CHIP	100PF	5%	50V
C118	1-104-664-11	ELECT	47MF	20%	25V
C119	1-104-664-11	ELECT	47MF	20%	25V
C120	1-163-137-00	CERAMIC CHIP	680PF	5%	50V
C121	1-163-038-00	CERAMIC CHIP	0.1MF		25V
C122	1-104-664-11	ELECT	47MF	20%	25V
C123	1-163-038-00	CERAMIC CHIP	0.1MF		25V
C124	1-164-004-11	CERAMIC CHIP	0.1MF	10%	25V
C125	1-163-251-11	CERAMIC CHIP	100PF	5%	50V
C126	1-164-004-11	CERAMIC CHIP	0.1MF	10%	25V
C127	1-163-243-11	CERAMIC CHIP	47PF	5%	50V
C128	1-163-038-00	CERAMIC CHIP	0.1MF		25V
C129	1-163-038-00	CERAMIC CHIP	0.1MF		25V
C300	1-164-346-11	CERAMIC CHIP	1MF		16V
C301	1-164-005-11	CERAMIC CHIP	0.47MF		25V
C303	1-164-232-11	CERAMIC CHIP	0.01MF	10%	50V
C304	1-163-251-11	CERAMIC CHIP	100PF	5%	50V
C305	1-164-505-11	CERAMIC CHIP	2.2MF		16V
C306	1-164-505-11	CERAMIC CHIP	2.2MF		16V
C307	1-164-505-11	CERAMIC CHIP	2.2MF		16V
C308	1-163-038-00	CERAMIC CHIP	0.1MF		25V
C309	1-104-664-11	ELECT	47MF	20%	25V
C310	1-126-962-11	ELECT	3.3MF	20%	50V
C311	1-126-934-11	ELECT	220MF	20%	16V
C312	1-164-232-11	CERAMIC CHIP	0.01MF	10%	50V
C313	1-164-346-11	CERAMIC CHIP	1MF		16V
C316	1-163-017-00	CERAMIC CHIP	0.0047MF	10%	50V
C317	1-164-005-11	CERAMIC CHIP	0.47MF		25V
C318	1-164-505-11	CERAMIC CHIP	2.2MF		16V
C319	1-126-964-11	ELECT	10MF	20%	50V
C321	1-164-346-11	CERAMIC CHIP	1MF		16V
C323	1-126-964-11	ELECT	10MF	20%	50V
C324	1-163-035-00	CERAMIC CHIP	0.047MF		50V
C325	1-163-009-11	CERAMIC CHIP	0.001MF	10%	50V
C326	1-163-009-11	CERAMIC CHIP	0.001MF	10%	50V
C327	1-137-581-11	FILM	0.1MF	5%	100V
C328	1-130-777-00	FILM	0.1MF	5%	63V
C329	1-163-038-00	CERAMIC CHIP	0.1MF		25V
C330	1-163-038-00	CERAMIC CHIP	0.1MF		25V
C331	1-163-038-00	CERAMIC CHIP	0.1MF		25V
C332	1-164-232-11	CERAMIC CHIP	0.01MF	10%	50V
C333	1-164-232-11	CERAMIC CHIP	0.01MF	10%	50V
C334	1-164-232-11	CERAMIC CHIP	0.01MF	10%	50V
C335	1-104-664-11	ELECT	47MF	20%	25V
C336	1-164-232-11	CERAMIC CHIP	0.01MF	10%	50V
C337	1-163-037-11	CERAMIC CHIP	0.022MF	10%	50V
C338	1-163-037-11	CERAMIC CHIP	0.022MF	10%	50V
C339	1-104-664-11	ELECT	47MF	20%	25V
C340	1-164-232-11	CERAMIC CHIP	0.01MF	10%	50V
C341	1-164-005-11	CERAMIC CHIP	0.47MF		25V
C342	1-163-133-00	CERAMIC CHIP	470PF	5%	50V
C343	1-163-037-11	CERAMIC CHIP	0.022MF	10%	50V
C344	1-163-231-11	CERAMIC CHIP	15PF	5%	50V
C345	1-163-231-11	CERAMIC CHIP	15PF	5%	50V
C346	1-164-232-11	CERAMIC CHIP	0.01MF	10%	50V
C347	1-164-232-11	CERAMIC CHIP	0.01MF	10%	50V
C348	1-164-232-11	CERAMIC CHIP	0.01MF	10%	50V
C349	1-104-664-11	ELECT	47MF	20%	25V
C350	1-164-005-11	CERAMIC CHIP	0.47MF		25V
C351	1-126-963-11	ELECT	4.7MF	20%	50V
C352	1-163-038-00	CERAMIC CHIP	0.1MF		25V
C353	1-163-038-00	CERAMIC CHIP	0.1MF		25V
C401	1-163-038-00	CERAMIC CHIP	0.1MF		25V
C402	1-126-964-11	ELECT	10MF	20%	50V
C403	1-163-038-00	CERAMIC CHIP	0.1MF		25V
C404	1-163-009-11	CERAMIC CHIP	0.001MF	10%	50V
C405	1-163-009-11	CERAMIC CHIP	0.001MF	10%	50V
C406	1-163-009-11	CERAMIC CHIP	0.001MF	10%	50V
C407	1-104-664-11	ELECT	47MF	20%	25V
C408	1-163-038-00	CERAMIC CHIP	0.1MF		25V
C409	1-163-038-00	CERAMIC CHIP	0.1MF		25V
C410	1-104-664-11	ELECT	47MF	20%	25V
C411	1-163-038-00	CERAMIC CHIP	0.1MF		25V
C412	1-164-232-11	CERAMIC CHIP	0.01MF	10%	50V
C413	1-163-037-11	CERAMIC CHIP	0.022MF	10%	50V
C414	1-164-232-11	CERAMIC CHIP	0.01MF	10%	50V
C415	1-104-664-11	ELECT	47MF	20%	25V
C416	1-163-235-11	CERAMIC CHIP	22PF	5%	50V
C417	1-163-227-11	CERAMIC CHIP	10PF	0.5PF	50V
C418	1-126-964-11	ELECT	10MF	20%	50V
C421	1-164-505-11	CERAMIC CHIP	2.2MF		16V
C422	1-163-009-11	CERAMIC CHIP	0.001MF	10%	50V
C423	1-163-009-11	CERAMIC CHIP	0.001MF	10%	50V
C424	1-163-009-11	CERAMIC CHIP	0.001MF	10%	50V
C425	1-164-505-11	CERAMIC CHIP	2.2MF		16V
C426	1-163-009-11	CERAMIC CHIP	0.001MF	10%	50V
C427	1-163-009-11	CERAMIC CHIP	0.001MF	10%	50V
C428	1-164-232-11	CERAMIC CHIP	0.01MF	10%	50V
C430	1-164-232-11	CERAMIC CHIP	0.01MF	10%	50V
C431	1-126-964-11	ELECT	10MF	20%	50V
C432	1-163-038-00	CERAMIC CHIP	0.1MF		25V
C433	1-163-038-00	CERAMIC CHIP	0.1MF		25V
C434	1-163-038-00	CERAMIC CHIP	0.1MF		25V
C435	1-104-664-11	ELECT	47MF	20%	25V
C436	1-163-038-00	CERAMIC CHIP	0.1MF		25V
C437	1-163-038-00	CERAMIC CHIP	0.1MF		25V
C438	1-104-664-11	ELECT	47MF	20%	25V
C439	1-163-038-00	CERAMIC CHIP	0.1MF		25V
C440	1-163-038-00	CERAMIC CHIP	0.1MF		25V
C441	1-104-664-11	ELECT	47MF	20%	25V
C442	1-163-038-00	CERAMIC CHIP	0.1MF		25V
C443	1-126-967-11	ELECT	47MF	20%	50V
C1001	1-163-233-11	CERAMIC CHIP	18PF	5%	50V
C1002	1-163-251-11	CERAMIC CHIP	100PF	5%	50V
C1004	1-163-251-11	CERAMIC CHIP	100PF	5%	50V
C1006	1-163-251-11	CERAMIC CHIP	100PF	5%	50V
C1008	1-163-251-11	CERAMIC CHIP	100PF	5%	50V
C1009	1-163-038-00	CERAMIC CHIP	0.1MF		25V
C1010	1-163-245-11	CERAMIC CHIP	56PF	5%	50V
C1011	1-163-245-11	CERAMIC CHIP	56PF	5%	50V
C1012	1-163-251-11	CERAMIC CHIP	100PF	5%	50V
C1013	1-163-251-11	CERAMIC CHIP	100PF	5%	50V
C1014	1-164-232-11	CERAMIC CHIP	0.01MF	10%	50V
C1015	1-163-037-11	CERAMIC CHIP	0.022MF	10%	50V
C1016	1-163-037-11	CERAMIC CHIP	0.022MF	10%	50V
C1017	1-163-259-91	CERAMIC CHIP	220PF	5%	50V
C1018	1-163-259-91	CERAMIC CHIP	220PF	5%	50V
C1019	1-164-232-11	CERAMIC CHIP	0.01MF	10%	50V
C1020	1-164-232-11	CERAMIC CHIP	0.01MF	10%	50V
C1021	1-164-232-11	CERAMIC CHIP	0.01MF	10%	50V
C1022	1-164-232-11	CERAMIC CHIP	0.01MF	10%	50V
C1023	1-163-009-11	CERAMIC CHIP	0.001MF	10%	50V
C1024	1-163-038-00	CERAMIC CHIP	0.1MF		25V
C1025	1-104-664-11	ELECT	47MF	20%	25V
C1026	1-163-038-00	CERAMIC CHIP	0.1MF		25V
C1028	1-163-259-91	CERAMIC CHIP	220PF	5%	50V
C1029	1-163-009-11	CERAMIC CHIP	0.001MF	10%	50V
C1030	1-163-009-11	CERAMIC CHIP	0.001MF	10%	50V

AG

REF. NO.	PART NO.	DESCRIPTION			REMARK
C1031	1-163-009-11	CERAMIC CHIP	0.001MF	10%	50V
C1032	1-163-009-11	CERAMIC CHIP	0.001MF	10%	50V
C1033	1-163-259-91	CERAMIC CHIP	220PF	5%	50V
C2001	1-164-346-11	CERAMIC CHIP	1MF		16V
C2002	1-126-933-11	ELECT	100MF	20%	16V
C2004	1-164-346-11	CERAMIC CHIP	1MF		16V
C2005	1-163-038-00	CERAMIC CHIP	0.1MF		25V
C2006	1-104-664-11	ELECT	47MF	20%	25V
C2008	1-104-664-11	ELECT	47MF	20%	25V
C2009	1-163-809-11	CERAMIC CHIP	0.047MF	10%	25V
C2010	1-163-809-11	CERAMIC CHIP	0.047MF	10%	25V
C2011	1-164-232-11	CERAMIC CHIP	0.01MF	10%	50V
C2012	1-163-017-00	CERAMIC CHIP	0.0047MF	10%	50V
C2013	1-164-505-11	CERAMIC CHIP	2.2MF		16V
C2014	1-163-017-00	CERAMIC CHIP	0.0047MF	10%	50V
C2015	1-104-664-11	ELECT	47MF	20%	25V
C2016	1-164-005-11	CERAMIC CHIP	0.47MF		25V
C2017	1-163-038-00	CERAMIC CHIP	0.1MF		25V
C2018	1-163-038-00	CERAMIC CHIP	0.1MF		25V
C2019	1-126-968-11	ELECT	100MF	20%	50V
C2020	1-164-005-11	CERAMIC CHIP	0.47MF		25V
C2022	1-163-031-11	CERAMIC CHIP	0.01MF		50V
C2023	1-164-005-11	CERAMIC CHIP	0.47MF		25V
C2024	1-126-965-11	ELECT	22MF	20%	50V
C2025	1-104-664-11	ELECT	47MF	20%	25V
C2026	1-164-005-11	CERAMIC CHIP	0.47MF		25V
C2027	1-126-965-11	ELECT	22MF	20%	50V
C2029	1-163-133-00	CERAMIC CHIP	470PF	5%	50V
C2030	1-164-346-11	CERAMIC CHIP	1MF		16V
C2031	1-163-133-00	CERAMIC CHIP	470PF	5%	50V
C2032	1-164-346-11	CERAMIC CHIP	1MF		16V
C2033	1-126-965-11	ELECT	22MF	20%	50V
C2035	1-163-133-00	CERAMIC CHIP	470PF	5%	50V
C2036	1-164-346-11	CERAMIC CHIP	1MF		16V
C2037	1-163-133-00	CERAMIC CHIP	470PF	5%	50V
C2038	1-164-346-11	CERAMIC CHIP	1MF		16V
C2039	1-104-666-11	ELECT	220MF	20%	25V
C2040	1-164-005-11	CERAMIC CHIP	0.47MF		25V
C2041	1-163-133-00	CERAMIC CHIP	470PF	5%	50V
C2042	1-164-346-11	CERAMIC CHIP	1MF		16V
C2043	1-163-133-00	CERAMIC CHIP	470PF	5%	50V
C2044	1-164-346-11	CERAMIC CHIP	1MF		16V
C2045	1-126-965-11	ELECT	22MF	20%	50V
C2046	1-164-005-11	CERAMIC CHIP	0.47MF		25V
C2047	1-126-935-11	ELECT	470MF	20%	16V
C2048	1-163-038-00	CERAMIC CHIP	0.1MF		25V
C2049	1-163-251-11	CERAMIC CHIP	100PF	5%	50V
C2050	1-163-251-11	CERAMIC CHIP	100PF	5%	50V
C2051	1-163-243-11	CERAMIC CHIP	47PF	5%	50V
C2052	1-163-087-00	CERAMIC CHIP	4PF	0.25PF	50V
C2053	1-163-087-00	CERAMIC CHIP	4PF	0.25PF	50V
C2054	1-164-232-11	CERAMIC CHIP	0.01MF	10%	50V
C2055	1-104-664-11	ELECT	47MF	20%	25V
C2056	1-164-232-11	CERAMIC CHIP	0.01MF	10%	50V
C2057	1-104-664-11	ELECT	47MF	20%	25V
C2059	1-126-964-11	ELECT	10MF	20%	50V
C2060	1-163-038-00	CERAMIC CHIP	0.1MF		25V
C2061	1-126-934-11	ELECT	220MF	20%	16V
C2062	1-126-965-11	ELECT	22MF	20%	50V
C2063	1-163-038-00	CERAMIC CHIP	0.1MF		25V
C2064	1-163-038-00	CERAMIC CHIP	0.1MF		25V
C2065	1-126-965-11	ELECT	22MF	20%	50V
C2066	1-163-251-11	CERAMIC CHIP	100PF	5%	50V
C2067	1-164-005-11	CERAMIC CHIP	0.47MF		25V
C2068	1-104-664-11	ELECT	47MF	20%	25V
C2069	1-163-133-00	CERAMIC CHIP	470PF	5%	50V
C2070	1-163-133-00	CERAMIC CHIP	470PF	5%	50V
C2071	1-163-038-00	CERAMIC CHIP	0.1MF		25V
C2072	1-126-962-11	ELECT	3.3MF	20%	50V
C2073	1-126-964-11	ELECT	10MF	20%	50V
C2074	1-164-005-11	CERAMIC CHIP	0.47MF		25V
C2075	1-163-131-00	CERAMIC CHIP	390PF	5%	50V
C2076	1-163-131-00	CERAMIC CHIP	390PF	5%	50V
C2077	1-126-964-11	ELECT	10MF	20%	50V
C2078	1-126-964-11	ELECT	10MF	20%	50V
C2079	1-104-664-11	ELECT	47MF	20%	25V
C2080	1-163-038-00	CERAMIC CHIP	0.1MF		25V
C2081	1-163-251-11	CERAMIC CHIP	100PF	5%	50V
C2082	1-164-005-11	CERAMIC CHIP	0.47MF		25V
C2083	1-163-038-00	CERAMIC CHIP	0.1MF		25V
C2084	1-126-965-11	ELECT	22MF	20%	50V
C2085	1-164-161-11	CERAMIC CHIP	0.0022MF	10%	50V
C2086	1-163-009-11	CERAMIC CHIP	0.001MF	10%	50V
C2087	1-163-007-11	CERAMIC CHIP	680PF	10%	50V
C2088	1-164-161-11	CERAMIC CHIP	0.0022MF	10%	50V
C2089	1-163-009-11	CERAMIC CHIP	0.001MF	10%	50V
C2090	1-163-007-11	CERAMIC CHIP	680PF	10%	50V
C2091	1-163-038-00	CERAMIC CHIP	0.1MF		25V
C2092	1-163-038-00	CERAMIC CHIP	0.1MF		25V
C2093	1-164-232-11	CERAMIC CHIP	0.01MF	10%	50V
C2094	1-163-009-11	CERAMIC CHIP	0.001MF	10%	50V
C2095	1-164-232-11	CERAMIC CHIP	0.01MF	10%	50V
		<CONNECTOR>			
CN101	* 1-564-505-11	PLUG, CONNECTOR 2P			
CN102	1-695-915-11	TAB (CONTACT)			
CN103	1-695-915-11	TAB (CONTACT)			
CN104	1-695-915-11	TAB (CONTACT)			
CN401	* 1-564-515-11	PLUG, CONNECTOR 12P			
CN402	* 1-564-516-11	PLUG, CONNECTOR 13P			
CN403	* 1-564-511-11	PLUG, CONNECTOR 8P			
CN405	* 1-564-510-11	PLUG, CONNECTOR 7P			
CN407	* 1-564-596-11	PLUG, CONNECTOR 15P			
CN408	1-695-302-11	CONNECTOR, BOARD TO BOARD 50P			
CN1002	* 1-564-515-11	PLUG, CONNECTOR 12P			
CN2001	* 1-770-747-11	CONNECTOR, BOARD TO BOARD 12P			
CN2004	* 1-564-507-11	PLUG, CONNECTOR 4P			
		<DIODE>			
D101	8-719-988-61	DIODE 1SS355TE-17			
D102	8-719-422-12	DIODE MA8039			
D104	8-719-976-96	DIODE DTZ4.7C			
D105	8-719-977-81	DIODE DTZ33B			
D301	8-719-988-61	DIODE 1SS355TE-17			
D306	8-719-988-61	DIODE 1SS355TE-17			
D307	8-719-988-61	DIODE 1SS355TE-17			
D401	8-719-047-16	DIODE BAS216			
D402	8-719-047-16	DIODE BAS216			
D403	8-719-977-22	DIODE DTZ9.1			
D414	8-719-988-61	DIODE 1SS355TE-17			
D2001	8-719-977-22	DIODE DTZ9.1			
D2002	8-719-977-22	DIODE DTZ9.1			
D2003	8-719-977-22	DIODE DTZ9.1			
D2004	8-719-977-22	DIODE DTZ9.1			
D2005	8-719-977-22	DIODE DTZ9.1			
D2006	8-719-977-22	DIODE DTZ9.1			
D2007	8-719-977-22	DIODE DTZ9.1			
D2008	8-719-977-22	DIODE DTZ9.1			
D2009	8-719-977-22	DIODE DTZ9.1			
D2010	8-719-977-22	DIODE DTZ9.1			
D2011	8-719-977-22	DIODE DTZ9.1			
D2012	8-719-977-22	DIODE DTZ9.1			
D2013	8-719-977-22	DIODE DTZ9.1			

REF. NO.	PART NO.	DESCRIPTION	REMARK
D2014	8-719-977-22	DIODE DTZ9.1	
D2015	8-719-047-16	DIODE BAS216	
		<FERRITE BEAD>	
FB401	1-414-235-11	INDUCTOR CHIP 0UH	
FB402	1-414-235-11	INDUCTOR CHIP 0UH	
FB403	1-414-235-11	INDUCTOR CHIP 0UH	
FB404	1-414-235-11	INDUCTOR CHIP 0UH	
FB405	1-414-235-11	INDUCTOR CHIP 0UH	
FB406	1-414-235-11	INDUCTOR CHIP 0UH	
FB407	1-414-235-11	INDUCTOR CHIP 0UH	
FB2001	1-414-235-11	INDUCTOR CHIP 0UH	
FB2002	1-414-235-11	INDUCTOR CHIP 0UH	
FB2003	1-414-235-11	INDUCTOR CHIP 0UH	
FB2004	1-414-235-11	INDUCTOR CHIP 0UH	
FB2005	1-414-235-11	INDUCTOR CHIP 0UH	
FB2006	1-414-235-11	INDUCTOR CHIP 0UH	
		<FILTER>	
FL101	1-236-071-11	ENCAPSULATED COMPONENT	
FL102	1-236-071-11	ENCAPSULATED COMPONENT	
FL103	1-236-071-11	ENCAPSULATED COMPONENT	
FL104	1-236-071-11	ENCAPSULATED COMPONENT	
FL105	1-236-071-11	ENCAPSULATED COMPONENT	
FL401	1-233-765-21	FILTER	
FL402	1-233-765-21	FILTER	
FL403	1-233-765-21	FILTER	
FL1001	1-236-071-11	ENCAPSULATED COMPONENT	
		<IC>	
IC301	8-752-076-87	IC CXA2050S	
IC401	8-759-436-89	IC MC141627FT	
IC402	8-759-430-79	IC TDA8395T/N3	
IC403	8-759-565-20	IC TDA4665T/V5-118	
IC404	8-752-072-94	IC CXA1875AM-T4	
IC1001	8-759-527-76	IC M24C08-MN6T	
IC1002	8-759-394-57	IC PST593C-MMP-4P	
IC1003	8-752-904-42	IC CXP85452-214Q-TL (GE/HK/AUS MODEL)	
IC1003	8-752-904-61	IC CXP85452-215Q-TL (ME MODEL)	
IC2001	8-759-090-21	IC TDA8424	
IC2002	8-752-068-45	IC CXA1855Q	
IC2003	8-759-491-95	IC MSP3410D-PS-B4-T-ND	
IC2004	8-759-100-96	IC uPC4558G2	
IC2006	8-759-394-57	IC PST593C-MMP-4P	
		<JACK>	
J2001	1-565-666-12	TERMINAL, S 4P (S-VIDEO IN)	
J2002	1-784-652-11	JACK BLOCK, PIN 12P (AUDIO/VIDEO IN, OUT)	
		<COIL>	
L101	1-412-006-31	INDUCTOR CHIP 10UH	
L102	1-412-005-11	INDUCTOR CHIP 8.2UH	
L103	1-412-005-11	INDUCTOR CHIP 8.2UH	
L104	1-410-993-11	INDUCTOR CHIP 1UH	
L105	1-412-006-31	INDUCTOR CHIP 10UH	
L301	1-408-603-31	INDUCTOR 10UH	
L401	1-412-002-31	INDUCTOR CHIP 4.7UH	
L1001	1-408-605-31	INDUCTOR 15UH	

REF. NO.	PART NO.	DESCRIPTION	REMARK
		<TRANSISTOR>	
Q101	8-729-120-28	TRANSISTOR 2SC1623-L5L6	
Q102	8-729-120-28	TRANSISTOR 2SC1623-L5L6	
Q103	8-729-120-28	TRANSISTOR 2SC1623-L5L6	
Q104	8-729-026-49	TRANSISTOR 2SA1037AK-T146-R	
Q301	8-729-120-28	TRANSISTOR 2SC1623-L5L6	
Q303	8-729-120-28	TRANSISTOR 2SC1623-L5L6	
Q304	8-729-026-49	TRANSISTOR 2SA1037AK-T146-R	
Q308	8-729-120-28	TRANSISTOR 2SC1623-L5L6	
Q309	8-729-120-28	TRANSISTOR 2SC1623-L5L6	
Q310	1-801-806-11	TRANSISTOR DTC144EKA-T146	
Q311	1-801-806-11	TRANSISTOR DTC144EKA-T146	
Q312	1-801-806-11	TRANSISTOR DTC144EKA-T146	
Q313	8-729-120-28	TRANSISTOR 2SC1623-L5L6	
Q401	8-729-027-38	TRANSISTOR DTA144EKA-T146	
Q402	1-801-806-11	TRANSISTOR DTC144EKA-T146	
Q403	8-729-120-28	TRANSISTOR 2SC1623-L5L6	
Q404	8-729-120-28	TRANSISTOR 2SC1623-L5L6	
Q405	8-729-120-28	TRANSISTOR 2SC1623-L5L6	
Q406	8-729-120-28	TRANSISTOR 2SC1623-L5L6	
Q407	8-729-120-28	TRANSISTOR 2SC1623-L5L6	
Q408	8-729-120-28	TRANSISTOR 2SC1623-L5L6	
Q409	8-729-120-28	TRANSISTOR 2SC1623-L5L6	
Q410	8-729-120-28	TRANSISTOR 2SC1623-L5L6	
Q412	8-729-026-49	TRANSISTOR 2SA1037AK-T146-R	
Q414	8-729-120-28	TRANSISTOR 2SC1623-L5L6	
Q415	8-729-026-49	TRANSISTOR 2SA1037AK-T146-R	
Q416	8-729-026-49	TRANSISTOR 2SA1037AK-T146-R	
Q417	8-729-120-28	TRANSISTOR 2SC1623-L5L6	
Q418	8-729-026-49	TRANSISTOR 2SA1037AK-T146-R	
Q419	8-729-026-49	TRANSISTOR 2SA1037AK-T146-R	
Q420	8-729-026-49	TRANSISTOR 2SA1037AK-T146-R	
Q421	8-729-120-28	TRANSISTOR 2SC1623-L5L6	
Q422	8-729-026-49	TRANSISTOR 2SA1037AK-T146-R	
Q423	8-729-026-49	TRANSISTOR 2SA1037AK-T146-R	
Q425	8-729-120-28	TRANSISTOR 2SC1623-L5L6	
Q426	8-729-120-28	TRANSISTOR 2SC1623-L5L6	
Q2001	8-729-120-28	TRANSISTOR 2SC1623-L5L6	
Q2002	8-729-120-28	TRANSISTOR 2SC1623-L5L6	
Q2003	8-729-120-28	TRANSISTOR 2SC1623-L5L6	
Q2004	8-729-120-28	TRANSISTOR 2SC1623-L5L6	
Q2005	8-729-026-49	TRANSISTOR 2SA1037AK-T146-R	
Q2006	8-729-120-28	TRANSISTOR 2SC1623-L5L6	
Q2007	8-729-120-28	TRANSISTOR 2SC1623-L5L6	
Q2008	8-729-026-49	TRANSISTOR 2SA1037AK-T146-R	
Q2009	8-729-026-49	TRANSISTOR 2SA1037AK-T146-R	
Q2010	8-729-120-28	TRANSISTOR 2SC1623-L5L6	
Q2011	8-729-822-44	TRANSISTOR 2SA1524	
Q2012	1-801-806-11	TRANSISTOR DTC144EKA-T146	

		<RESISTOR>			
R101	1-216-065-00	RES,CHIP	4.7K	5%	1/10W
R102	1-216-025-00	RES,CHIP	100	5%	1/10W
R103	1-216-025-00	RES,CHIP	100	5%	1/10W
R104	1-216-025-00	RES,CHIP	100	5%	1/10W
R106	1-216-027-00	RES,CHIP	120	5%	1/10W
R107	1-216-069-00	RES,CHIP	6.8K	5%	1/10W
R108	1-216-043-91	RES,CHIP	560	5%	1/10W
R109	1-216-075-00	RES,CHIP	12K	5%	1/10W
R111	1-216-033-00	RES,CHIP	220	5%	1/10W
R112	1-216-025-00	RES,CHIP	100	5%	1/10W
R113	1-216-041-00	RES,CHIP	470	5%	1/10W
R114	1-216-069-00	RES,CHIP	6.8K	5%	1/10W
R115	1-216-049-00	RES,CHIP	1K	5%	1/10W
R116	1-216-025-00	RES,CHIP	100	5%	1/10W
R117	1-216-025-00	RES,CHIP	100	5%	1/10W

AG

REF. NO.	PART NO.	DESCRIPTION			REMARK
R118	1-216-037-00	RES,CHIP	330	5%	1/10W
R119	1-216-059-00	RES,CHIP	2.7K	5%	1/10W
R120	1-216-057-00	RES,CHIP	2.2K	5%	1/10W
R121	1-216-095-00	RES,CHIP	82K	5%	1/10W
R122	1-216-057-00	RES,CHIP	2.2K	5%	1/10W
R123	1-208-845-11	RES,CHIP	1M	5%	1/10W
R124	1-216-081-00	RES,CHIP	22K	5%	1/10W
R125	1-216-065-00	RES,CHIP	4.7K	5%	1/10W
R126	1-216-073-00	RES,CHIP	10K	5%	1/10W
R127	1-216-097-00	RES,CHIP	100K	5%	1/10W
R192	1-216-049-00	RES,CHIP	1K	5%	1/10W
R193	1-216-049-00	RES,CHIP	1K	5%	1/10W
R194	1-216-049-00	RES,CHIP	1K	5%	1/10W
R195	1-216-049-00	RES,CHIP	1K	5%	1/10W
R301	1-216-049-00	RES,CHIP	1K	5%	1/10W
R303	1-216-025-00	RES,CHIP	100	5%	1/10W
R304	1-216-045-00	RES,CHIP	680	5%	1/10W
R305	1-216-109-00	RES,CHIP	330K	5%	1/10W
R307	1-216-129-00	RES,CHIP	2.2M	5%	1/10W
R308	1-216-059-00	RES,CHIP	2.7K	5%	1/10W
R309	1-216-089-00	RES,CHIP	47K	5%	1/10W
R310	1-216-089-00	RES,CHIP	47K	5%	1/10W
R311	1-216-025-00	RES,CHIP	100	5%	1/10W
R315	1-216-049-00	RES,CHIP	1K	5%	1/10W
R316	1-216-049-00	RES,CHIP	1K	5%	1/10W
R317	1-216-025-00	RES,CHIP	100	5%	1/10W
R318	1-216-025-00	RES,CHIP	100	5%	1/10W
R319	1-216-025-00	RES,CHIP	100	5%	1/10W
R320	1-216-025-00	RES,CHIP	100	5%	1/10W
R321	1-216-025-00	RES,CHIP	100	5%	1/10W
R322	1-216-025-00	RES,CHIP	100	5%	1/10W
R323	1-216-061-00	RES,CHIP	3.3K	5%	1/10W
R324	1-216-049-00	RES,CHIP	1K	5%	1/10W
R325	1-216-025-00	RES,CHIP	100	5%	1/10W
R329	1-216-125-00	RES,CHIP	1.5M	5%	1/10W
R331	1-216-041-00	RES,CHIP	470	5%	1/10W
R332	1-216-067-00	RES,CHIP	5.6K	5%	1/10W
R333	1-216-033-00	RES,CHIP	220	5%	1/10W
R335	1-216-129-00	RES,CHIP	2.2M	5%	1/10W
R338	1-216-025-00	RES,CHIP	100	5%	1/10W
R339	1-216-025-00	RES,CHIP	100	5%	1/10W
R340	1-216-295-00	SHORT	0		
R341	1-216-675-11	METAL CHIP	10K	0.50%	1/10W
R348	1-216-077-00	RES,CHIP	15K	5%	1/10W
R349	1-216-644-11	METAL CHIP	510	0.50%	1/10W
R350	1-216-053-00	RES,CHIP	1.5K	5%	1/10W
R352	1-216-033-00	RES,CHIP	220	5%	1/10W
R353	1-216-033-00	RES,CHIP	220	5%	1/10W
R354	1-216-049-00	RES,CHIP	1K	5%	1/10W
R355	1-216-033-00	RES,CHIP	220	5%	1/10W
R356	1-216-025-00	RES,CHIP	100	5%	1/10W
R357	1-216-025-00	RES,CHIP	100	5%	1/10W
R358	1-216-025-00	RES,CHIP	100	5%	1/10W
R359	1-216-025-00	RES,CHIP	100	5%	1/10W
R360	1-216-057-00	RES,CHIP	2.2K	5%	1/10W
R361	1-216-033-00	RES,CHIP	220	5%	1/10W
R362	1-216-057-00	RES,CHIP	2.2K	5%	1/10W
R363	1-216-025-00	RES,CHIP	100	5%	1/10W
R365	1-216-049-00	RES,CHIP	1K	5%	1/10W
R366	1-216-049-00	RES,CHIP	1K	5%	1/10W
R367	1-216-093-91	RES,CHIP	68K	5%	1/10W
R368	1-216-133-00	RES,CHIP	3.3M	5%	1/10W
R369	1-216-025-00	RES,CHIP	100	5%	1/10W
R370	1-216-057-00	RES,CHIP	2.2K	5%	1/10W
R371	1-216-073-00	RES,CHIP	10K	5%	1/10W
R372	1-216-049-00	RES,CHIP	1K	5%	1/10W
R374	1-216-295-00	SHORT	0		

REF. NO.	PART NO.	DESCRIPTION			REMARK
R375	1-216-105-00	RES,CHIP	220K	5%	1/10W
R401	1-216-041-00	RES,CHIP	470	5%	1/10W
R402	1-216-041-00	RES,CHIP	470	5%	1/10W
R403	1-216-041-00	RES,CHIP	470	5%	1/10W
R404	1-216-025-00	RES,CHIP	100	5%	1/10W
R405	1-216-025-00	RES,CHIP	100	5%	1/10W
R406	1-216-025-00	RES,CHIP	100	5%	1/10W
R407	1-216-025-00	RES,CHIP	100	5%	1/10W
R408	1-216-025-00	RES,CHIP	100	5%	1/10W
R409	1-216-025-00	RES,CHIP	100	5%	1/10W
R410	1-216-025-00	RES,CHIP	100	5%	1/10W
R411	1-216-025-00	RES,CHIP	100	5%	1/10W
R412	1-216-025-00	RES,CHIP	100	5%	1/10W
R413	1-216-295-00	SHORT	0		
R414	1-216-073-00	RES,CHIP	10K	5%	1/10W
R417	1-216-295-00	SHORT	0		
R418	1-216-033-00	RES,CHIP	220	5%	1/10W
R419	1-216-652-11	METAL CHIP	1.1K	0.50%	1/10W
R420	1-216-081-00	RES,CHIP	22K	5%	1/10W
R421	1-216-049-00	RES,CHIP	1K	5%	1/10W
R422	1-216-041-00	RES,CHIP	470	5%	1/10W
R423	1-216-049-00	RES,CHIP	1K	5%	1/10W
R424	1-216-033-00	RES,CHIP	220	5%	1/10W
R425	1-216-041-00	RES,CHIP	470	5%	1/10W
R426	1-216-049-00	RES,CHIP	1K	5%	1/10W
R427	1-216-077-00	RES,CHIP	15K	5%	1/10W
R428	1-216-025-00	RES,CHIP	100	5%	1/10W
R429	1-216-025-00	RES,CHIP	100	5%	1/10W
R430	1-216-025-00	RES,CHIP	100	5%	1/10W
R431	1-216-025-00	RES,CHIP	100	5%	1/10W
R432	1-216-001-00	RES,CHIP	10	5%	1/10W
R433	1-216-001-00	RES,CHIP	10	5%	1/10W
R434	1-216-057-00	RES,CHIP	2.2K	5%	1/10W
R435	1-216-025-00	RES,CHIP	100	5%	1/10W
R437	1-216-025-00	RES,CHIP	100	5%	1/10W
R440	1-216-067-00	RES,CHIP	5.6K	5%	1/10W
R441	1-216-065-00	RES,CHIP	4.7K	5%	1/10W
R442	1-216-069-00	RES,CHIP	6.8K	5%	1/10W
R443	1-216-043-91	RES,CHIP	560	5%	1/10W
R444	1-216-295-00	SHORT	0		
R445	1-216-049-00	RES,CHIP	1K	5%	1/10W
R446	1-216-081-00	RES,CHIP	22K	5%	1/10W
R447	1-216-049-00	RES,CHIP	1K	5%	1/10W
R448	1-216-049-00	RES,CHIP	1K	5%	1/10W
R449	1-216-049-00	RES,CHIP	1K	5%	1/10W
R450	1-216-295-00	SHORT	0		
R451	1-216-017-00	RES,CHIP	47	5%	1/10W
R452	1-216-025-00	RES,CHIP	100	5%	1/10W
R453	1-216-089-00	RES,CHIP	47K	5%	1/10W
R454	1-216-073-00	RES,CHIP	10K	5%	1/10W
R455	1-216-025-00	RES,CHIP	100	5%	1/10W
R456	1-216-025-00	RES,CHIP	100	5%	1/10W
R457	1-216-057-00	RES,CHIP	2.2K	5%	1/10W
R458	1-216-067-00	RES,CHIP	5.6K	5%	1/10W
R459	1-216-045-00	RES,CHIP	680	5%	1/10W
R460	1-216-057-00	RES,CHIP	2.2K	5%	1/10W
R461	1-216-043-91	RES,CHIP	560	5%	1/10W
R462	1-216-039-00	RES,CHIP	390	5%	1/10W
R463	1-216-025-00	RES,CHIP	100	5%	1/10W
R464	1-216-057-00	RES,CHIP	2.2K	5%	1/10W
R465	1-216-067-00	RES,CHIP	5.6K	5%	1/10W
R466	1-216-045-00	RES,CHIP	680	5%	1/10W
R467	1-216-057-00	RES,CHIP	2.2K	5%	1/10W
R468	1-216-033-00	RES,CHIP	220	5%	1/10W
R469	1-216-043-91	RES,CHIP	560	5%	1/10W
R470	1-216-033-00	RES,CHIP	220	5%	1/10W
R471	1-216-025-00	RES,CHIP	100	5%	1/10W

REF. NO.	PART NO.	DESCRIPTION			REMARK
R472	1-216-033-00	RES,CHIP	220	5%	1/10W
R473	1-216-025-00	RES,CHIP	100	5%	1/10W
R474	1-216-025-00	RES,CHIP	100	5%	1/10W
R475	1-216-025-00	RES,CHIP	100	5%	1/10W
R476	1-216-049-00	RES,CHIP	1K	5%	1/10W
R1005	1-216-667-11	METAL CHIP	4.7K	0.50%	1/10W
R1006	1-216-667-11	METAL CHIP	4.7K	0.50%	1/10W
R1007	1-216-065-00	RES,CHIP	4.7K	5%	1/10W
R1008	1-216-065-00	RES,CHIP	4.7K	5%	1/10W
R1009	1-216-065-00	RES,CHIP	4.7K	5%	1/10W
R1010	1-216-065-00	RES,CHIP	4.7K	5%	1/10W
R1011	1-216-025-00	RES,CHIP	100	5%	1/10W
R1012	1-216-025-00	RES,CHIP	100	5%	1/10W
R1013	1-216-025-00	RES,CHIP	100	5%	1/10W
R1014	1-216-025-00	RES,CHIP	100	5%	1/10W
R1015	1-216-025-00	RES,CHIP	100	5%	1/10W
R1016	1-216-025-00	RES,CHIP	100	5%	1/10W
R1017	1-216-025-00	RES,CHIP	100	5%	1/10W
R1018	1-216-025-00	RES,CHIP	100	5%	1/10W
R1019	1-216-025-00	RES,CHIP	100	5%	1/10W
R1020	1-216-025-00	RES,CHIP	100	5%	1/10W
R1022	1-216-061-00	RES,CHIP	3.3K	5%	1/10W
R1023	1-216-061-00	RES,CHIP	3.3K	5%	1/10W
R1024	1-216-061-00	RES,CHIP	3.3K	5%	1/10W
R1025	1-216-033-00	RES,CHIP	220	5%	1/10W
R1026	1-216-049-00	RES,CHIP	1K	5%	1/10W
R1027	1-216-065-00	RES,CHIP	4.7K	5%	1/10W
R1028	1-216-025-00	RES,CHIP	100	5%	1/10W
R1029	1-216-025-00	RES,CHIP	100	5%	1/10W
R1031	1-216-295-00	SHORT	0		
R1032	1-216-073-00	RES,CHIP	10K	5%	1/10W
R1033	1-216-295-00	SHORT	0		
R1035	1-216-049-00	RES,CHIP	1K	5%	1/10W
R1036	1-216-025-00	RES,CHIP	100	5%	1/10W
R1038	1-216-025-00	RES,CHIP	100	5%	1/10W
R1039	1-216-025-00	RES,CHIP	100	5%	1/10W
R1040	1-216-025-00	RES,CHIP	100	5%	1/10W
R1041	1-216-025-00	RES,CHIP	100	5%	1/10W
R1042	1-216-025-00	RES,CHIP	100	5%	1/10W
R1043	1-216-025-00	RES,CHIP	100	5%	1/10W
R1044	1-216-025-00	RES,CHIP	100	5%	1/10W
R1047	1-216-025-00	RES,CHIP	100	5%	1/10W
R1048	1-216-049-00	RES,CHIP	1K	5%	1/10W
R1050	1-216-049-00	RES,CHIP	1K	5%	1/10W
R1051	1-216-025-00	RES,CHIP	100	5%	1/10W
R1052	1-216-025-00	RES,CHIP	100	5%	1/10W
R1053	1-216-025-00	RES,CHIP	100	5%	1/10W
R1054	1-216-049-00	RES,CHIP	1K	5%	1/10W
R1055	1-216-025-00	RES,CHIP	100	5%	1/10W
R1056	1-216-025-00	RES,CHIP	100	5%	1/10W
R1057	1-216-025-00	RES,CHIP	100	5%	1/10W
R1058	1-216-025-00	RES,CHIP	100	5%	1/10W
R1060	1-216-025-00	RES,CHIP	100	5%	1/10W
R1061	1-216-025-00	RES,CHIP	100	5%	1/10W
R1062	1-216-025-00	RES,CHIP	100	5%	1/10W
R1064	1-216-073-00	RES,CHIP	10K	5%	1/10W
R1065	1-216-073-00	RES,CHIP	10K	5%	1/10W
R1066	1-216-073-00	RES,CHIP	10K	5%	1/10W
R1067	1-216-073-00	RES,CHIP	10K	5%	1/10W
R1068	1-216-073-00	RES,CHIP	10K	5%	1/10W
R1069	1-216-049-00	RES,CHIP	1K	5%	1/10W
R1070	1-216-049-00	RES,CHIP	1K	5%	1/10W
R1071	1-216-049-00	RES,CHIP	1K	5%	1/10W
R1072	1-216-025-00	RES,CHIP	100	5%	1/10W
R2001	1-216-025-00	RES,CHIP	100	5%	1/10W
R2002	1-216-039-00	RES,CHIP	390	5%	1/10W
R2003	1-216-025-00	RES,CHIP	100	5%	1/10W

REF. NO.	PART NO.	DESCRIPTION			REMARK
R2004	1-216-039-00	RES,CHIP	390	5%	1/10W
R2005	1-216-025-00	RES,CHIP	100	5%	1/10W
R2006	1-216-041-00	RES,CHIP	470	5%	1/10W
R2007	1-216-025-00	RES,CHIP	100	5%	1/10W
R2008	1-216-041-00	RES,CHIP	470	5%	1/10W
R2009	1-216-025-00	RES,CHIP	100	5%	1/10W
R2010	1-216-025-00	RES,CHIP	100	5%	1/10W
R2012	1-216-025-00	RES,CHIP	100	5%	1/10W
R2013	1-216-025-00	RES,CHIP	100	5%	1/10W
R2014	1-216-065-00	RES,CHIP	4.7K	5%	1/10W
R2015	1-216-025-00	RES,CHIP	100	5%	1/10W
R2016	1-216-097-00	RES,CHIP	100K	5%	1/10W
R2017	1-216-065-00	RES,CHIP	4.7K	5%	1/10W
R2018	1-216-025-00	RES,CHIP	100	5%	1/10W
R2019	1-216-097-00	RES,CHIP	100K	5%	1/10W
R2020	1-216-057-00	RES,CHIP	2.2K	5%	1/10W
R2022	1-216-022-00	RES,CHIP	75	5%	1/10W
R2023	1-216-033-00	RES,CHIP	220	5%	1/10W
R2024	1-216-025-00	RES,CHIP	100	5%	1/10W
R2025	1-216-025-00	RES,CHIP	100	5%	1/10W
R2026	1-216-065-00	RES,CHIP	4.7K	5%	1/10W
R2027	1-216-033-00	RES,CHIP	220	5%	1/10W
R2028	1-216-025-00	RES,CHIP	100	5%	1/10W
R2029	1-216-022-00	RES,CHIP	75	5%	1/10W
R2030	1-216-065-00	RES,CHIP	4.7K	5%	1/10W
R2031	1-216-025-00	RES,CHIP	100	5%	1/10W
R2032	1-216-022-00	RES,CHIP	75	5%	1/10W
R2033	1-216-033-00	RES,CHIP	220	5%	1/10W
R2034	1-216-061-00	RES,CHIP	3.3K	5%	1/10W
R2035	1-216-025-00	RES,CHIP	100	5%	1/10W
R2036	1-216-113-00	RES,CHIP	470K	5%	1/10W
R2037	1-216-065-00	RES,CHIP	4.7K	5%	1/10W
R2038	1-216-025-00	RES,CHIP	100	5%	1/10W
R2039	1-216-113-00	RES,CHIP	470K	5%	1/10W
R2040	1-216-065-00	RES,CHIP	4.7K	5%	1/10W
R2041	1-216-073-00	RES,CHIP	10K	5%	1/10W
R2042	1-216-022-00	RES,CHIP	75	5%	1/10W
R2043	1-216-033-00	RES,CHIP	220	5%	1/10W
R2044	1-216-033-00	RES,CHIP	220	5%	1/10W
R2045	1-216-033-00	RES,CHIP	220	5%	1/10W
R2046	1-216-073-00	RES,CHIP	10K	5%	1/10W
R2047	1-216-113-00	RES,CHIP	470K	5%	1/10W
R2048	1-216-065-00	RES,CHIP	4.7K	5%	1/10W
R2049	1-216-073-00	RES,CHIP	10K	5%	1/10W
R2050	1-216-025-00	RES,CHIP	100	5%	1/10W
R2051	1-216-113-00	RES,CHIP	470K	5%	1/10W
R2052	1-216-065-00	RES,CHIP	4.7K	5%	1/10W
R2053	1-216-023-00	RES,CHIP	82	5%	1/10W
R2054	1-216-048-00	RES,CHIP	910	5%	1/10W
R2056	1-216-041-00	RES,CHIP	470	5%	1/10W
R2057	1-216-113-00	RES,CHIP	470K	5%	1/10W
R2058	1-216-089-00	RES,CHIP	47K	5%	1/10W
R2059	1-216-113-00	RES,CHIP	470K	5%	1/10W
R2060	1-216-089-00	RES,CHIP	47K	5%	1/10W
R2061	1-216-041-00	RES,CHIP	470	5%	1/10W
R2063	1-216-113-00	RES,CHIP	470K	5%	1/10W
R2064	1-216-021-00	RES,CHIP	68	5%	1/10W
R2065	1-216-033-00	RES,CHIP	220	5%	1/10W
R2066	1-216-039-00	RES,CHIP	390	5%	1/10W
R2067	1-216-089-00	RES,CHIP	47K	5%	1/10W
R2068	1-216-295-00	SHORT	0		
R2069	1-216-039-00	RES,CHIP	390	5%	1/10W
R2070	1-216-089-00	RES,CHIP	47K	5%	1/10W
R2071	1-216-295-00	SHORT	0		
R2072	1-216-025-00	RES,CHIP	100	5%	1/10W
R2073	1-216-025-00	RES,CHIP	100	5%	1/10W
R2074	1-216-025-00	RES,CHIP	100	5%	1/10W
R2075	1-216-025-00	RES,CHIP	100	5%	1/10W

The components identified by shading and mark ⚠ are critical for safety.
Replace only with part number specified.

AG G

REF. NO.	PART NO.	DESCRIPTION			REMARK
R2076	1-216-025-00	RES,CHIP	100	5%	1/10W
R2077	1-216-025-00	RES,CHIP	100	5%	1/10W
R2078	1-249-389-11	CARBON	4.7	5%	1/4W F
R2079	1-216-049-00	RES,CHIP	1K	5%	1/10W
R2080	1-216-073-00	RES,CHIP	10K	5%	1/10W
R2081	1-216-089-00	RES,CHIP	47K	5%	1/10W
R2082	1-216-089-00	RES,CHIP	47K	5%	1/10W
R2083	1-216-048-00	RES,CHIP	910	5%	1/10W
R2084	1-216-041-00	RES,CHIP	470	5%	1/10W
R2085	1-216-063-91	RES,CHIP	3.9K	5%	1/10W
R2086	1-216-057-00	RES,CHIP	2.2K	5%	1/10W
R2087	1-216-049-00	RES,CHIP	1K	5%	1/10W
R2088	1-216-089-00	RES,CHIP	47K	5%	1/10W
R2089	1-216-089-00	RES,CHIP	47K	5%	1/10W
R2090	1-216-065-00	RES,CHIP	4.7K	5%	1/10W
R2091	1-216-089-00	RES,CHIP	47K	5%	1/10W
R2092	1-216-089-00	RES,CHIP	47K	5%	1/10W
R2093	1-216-065-00	RES,CHIP	4.7K	5%	1/10W
R2094	1-216-065-00	RES,CHIP	4.7K	5%	1/10W
R2095	1-216-065-00	RES,CHIP	4.7K	5%	1/10W
R2096	1-216-065-00	RES,CHIP	4.7K	5%	1/10W
R2097	1-216-065-00	RES,CHIP	4.7K	5%	1/10W
R2098	1-216-025-00	RES,CHIP	100	5%	1/10W
R2099	1-216-025-00	RES,CHIP	100	5%	1/10W
R2100	1-216-025-00	RES,CHIP	100	5%	1/10W
R2101	1-216-295-00	SHORT	0		
R2102	1-216-065-00	RES,CHIP	4.7K	5%	1/10W
R2103	1-216-025-00	RES,CHIP	100	5%	1/10W
R3301	1-216-295-00	SHORT	0		
R3302	1-216-295-00	SHORT	0		
R3303	1-216-295-00	SHORT	0		
R3390	1-216-039-00	RES,CHIP	390	5%	1/10W

<TUNER>

TU101	⚠ 8-598-372-20	TUNER, FSS BTF-FG441	

<CRYSTAL>

X301	1-767-127-11	VIBRATOR, CERAMIC	
X302	1-567-504-11	OSCILLATOR, CRYSTAL	
X303	1-567-505-11	OSCILLATOR, CRYSTAL	
X1001	1-577-358-21	VIBRATOR, CERAMIC	
X2001	1-760-628-11	VIBRATOR, CRYSTAL	

****

* A-1316-394-A	G COMPL		
	**********		
4-382-854-11	SCREW (M3X10), P, SW (+)		

<CAPACITOR>

C6001	⚠ 1-119-894-51	CERAMIC	2200PF	20%	250V
C6002	⚠ 1-104-708-51	FILM	0.47MF	20%	250V
C6003	1-126-943-11	ELECT	2200MF	20%	25V
C6004	1-104-665-11	ELECT	100MF	20%	25V
C6006	⚠ 1-104-706-51	FILM	0.22MF	20%	250V
C6007	⚠ 1-119-894-51	CERAMIC	2200PF	20%	250V
C6009	1-102-114-00	CERAMIC	470PF	10%	50V
C6010	1-102-112-00	CERAMIC	330PF	10%	50V
C6011	1-107-678-11	ELECT	4.7MF	20%	450V
C6012	1-102-112-00	CERAMIC	330PF	10%	50V
C6013	1-117-227-11	FILM	1MF	10%	450V
C6014	1-126-968-11	ELECT	100MF	20%	50V
C6016	1-126-964-11	ELECT	10MF	20%	50V
C6018	1-119-868-11	ELECT	820MF	20%	450V
C6019	1-104-664-11	ELECT	47MF	20%	25V
C6020	1-104-665-11	ELECT	100MF	20%	25V
C6021	1-126-961-11	ELECT	2.2MF	20%	50V
C6022	1-137-370-11	FILM	0.01MF	5%	50V
C6023	1-102-112-00	CERAMIC	330PF	10%	50V
C6024	1-126-960-11	ELECT	1MF	20%	50V
C6025	1-136-165-00	FILM	0.1MF	5%	50V
C6026	1-104-665-11	ELECT	100MF	20%	25V
C6028	1-125-969-91	CERAMIC	680PF	10%	1KV
C6029	1-125-969-91	CERAMIC	680PF	10%	1KV
C6030	1-115-405-11	FILM	0.039MF	3%	1KV
C6031	1-126-964-11	ELECT	10MF	20%	50V
C6032	1-126-964-11	ELECT	10MF	20%	50V
C6033	1-136-479-11	FILM	0.001MF	2%	50V
C6034	1-101-810-00	CERAMIC	100PF	5%	500V
C6035	1-101-810-00	CERAMIC	100PF	5%	500V
C6036	1-126-768-11	ELECT	2200MF	20%	16V
C6037	1-126-943-11	ELECT	2200MF	20%	25V
C6038	1-128-548-11	ELECT	4700MF	20%	25V
C6039	1-126-972-11	ELECT	1000MF	20%	50V
C6040	1-126-972-11	ELECT	1000MF	20%	50V
C6041	1-126-960-11	ELECT	1MF	20%	50V
C6042	1-104-665-11	ELECT	100MF	20%	25V
C6043	1-126-964-11	ELECT	10MF	20%	50V
C6044	1-107-641-11	ELECT	220MF	20%	160V
C6045	1-104-665-11	ELECT	100MF	20%	25V
C6046	1-104-665-11	ELECT	100MF	20%	25V
C6047	1-102-112-00	CERAMIC	330PF	10%	50V
C6048	1-126-960-11	ELECT	1MF	20%	50V
C6049	1-136-165-00	FILM	0.1MF	5%	50V
C6050	1-109-954-11	ELECT	0.47MF	20%	160V
C6051	1-126-935-11	ELECT	470MF	20%	6.3V
C6052	1-125-969-91	CERAMIC	680PF	10%	1KV
C6053	1-125-969-91	CERAMIC	680PF	10%	1KV
C6055	1-107-641-11	ELECT	220MF	20%	160V
C6056	1-137-370-11	FILM	0.01MF	5%	50V
C6058	1-102-114-00	CERAMIC	470PF	10%	50V
C6059	1-102-114-00	CERAMIC	470PF	10%	50V
C6060	1-102-114-00	CERAMIC	470PF	10%	50V
C6061	1-102-114-00	CERAMIC	470PF	10%	50V
C6062	1-102-114-00	CERAMIC	470PF	10%	50V
C6063	1-102-114-00	CERAMIC	470PF	10%	50V
C6064	⚠ 1-161-964-51	CERAMIC	0.0047MF		250V
C6065	⚠ 1-161-964-51	CERAMIC	0.0047MF		250V

<CONNECTOR>

CN6001	1-695-915-11	TAB (CONTACT)	
CN6002	1-695-915-11	TAB (CONTACT)	
CN6005	* 1-580-843-11	PIN, CONNECTOR (POWER)	
CN6006	* 1-580-689-11	PIN, CONNECTOR (PC BOARD) 4P	
CN6007	* 1-691-291-11	PIN, CONNECTOR (PC BOARD) 5P	
CN6008	* 1-564-509-11	PLUG, CONNECTOR 6P	
CN6009	1-695-915-11	TAB (CONTACT)	
CN6011	* 1-573-986-11	PIN, CONNECTOR (PC BOARD) 5P	
CN6012	* 1-508-766-00	PIN, CONNECTOR (5mm PITCH) 4P	
CN6013	* 1-508-765-00	PIN, CONNECTOR (5mm PITCH) 3P	

<DIODE>

D6001	8-719-110-31	DIODE RD12ESB2
D6002	8-719-052-91	DIODE D4SBS4-F
D6003	8-719-022-99	DIODE D6SB60L
D6004	8-719-057-96	DIODE D10SC6M-4012
D6005	8-719-921-88	DIODE MTZJ-13B
D6006	8-719-991-33	DIODE 1SS133T-77
D6007	8-719-911-55	DIODE U05G

The components identified by shading and mark ⚠ are critical for safety.
Replace only with part number specified.

REF. NO.		PART NO.	DESCRIPTION	REMARK
D6008		8-719-979-64	DIODE UF4005PKG23	
D6009		8-719-059-23	DIODE P6KE200AG23	
D6010		8-719-028-72	DIODE RGP02-17EL-6433	
D6011		8-719-982-26	DIODE MTZJ-33B	
D6012		8-719-991-33	DIODE 1SS133T-77	
D6013		8-719-110-03	DIODE RD7.5ESB2	
D6014		8-719-991-33	DIODE 1SS133T-77	
D6015		8-719-991-33	DIODE 1SS133T-77	
D6016		8-719-991-33	DIODE 1SS133T-77	
D6017		8-719-063-73	DIODE D1NL20U-TR	
D6018		8-719-991-33	DIODE 1SS133T-77	
D6019		8-719-991-33	DIODE 1SS133T-77	
D6020		8-719-991-33	DIODE 1SS133T-77	
D6021		8-719-979-64	DIODE UF4005PKG23	
D6022		8-719-110-53	DIODE RD20ESB2	
D6023		8-719-979-64	DIODE UF4005PKG23	
D6024		8-719-110-53	DIODE RD20ESB2	
D6025		8-719-063-73	DIODE D1NL20U-TR	
D6026		8-719-110-53	DIODE RD20ESB2	
D6027		8-719-110-53	DIODE RD20ESB2	
D6028		8-719-911-19	DIODE 1SS119-25	
D6029		8-719-991-33	DIODE 1SS133T-77	
D6032		8-719-991-33	DIODE 1SS133T-77	
D6033		8-719-991-33	DIODE 1SS133T-77	
D6035		8-719-018-83	DIODE D2S4M	
D6036		8-719-018-83	DIODE D2S4M	
D6037		8-719-031-78	DIODE S2L40F	
D6038		8-719-312-47	DIODE RBA-406B	
D6042		8-719-979-64	DIODE UF4005PKG23	
D6043		8-719-110-53	DIODE RD20ESB2	
D6044		8-719-979-64	DIODE UF4005PKG23	
D6045		8-719-110-53	DIODE RD20ESB2	
D6046		8-719-110-53	DIODE RD20ESB2	
D6047		8-719-110-53	DIODE RD20ESB2	
D6048		8-719-921-88	DIODE MTZJ-13B	
D6049		8-719-031-78	DIODE S2L40F	
D6050		8-719-991-33	DIODE 1SS133T-77	
D6051		8-719-991-33	DIODE 1SS133T-77	
			<FUSE>	
F6001	⚠	1-576-232-11	FUSE (H.B.C.) 5A/250V	
		1-533-230-11	HOLDER, FUSE ; F6001	
			<FERRITE BEAD>	
FB6009		1-410-397-21	FERRITE 1.1UH	
			<IC>	
IC6001	⚠	8-759-468-89	IC TOP209P	
IC6002		8-759-103-93	IC uPC393C	
IC6003		8-759-185-47	IC IR2112	
IC6004		8-759-077-25	IC IR3M02A	
IC6005	⚠	8-749-924-35	PHOTO COUPLER ON3171-R	
IC6006	⚠	8-749-924-35	PHOTO COUPLER ON3171-R	
IC6007		8-759-185-47	IC IR2112	
IC6008		8-749-920-61	IC SE-135N	
			<COIL>	
L6002		1-412-525-31	INDUCTOR 10UH	
L6003		1-412-525-31	INDUCTOR 10UH	
L6004		1-412-525-31	INDUCTOR 10UH	
L6005		1-412-525-31	INDUCTOR 10UH	
L6006		1-412-525-31	INDUCTOR 10UH	
L6008		1-412-533-21	INDUCTOR 47UH	
L6009		1-412-523-41	INDUCTOR 6.8UH	
L6010		1-412-523-41	INDUCTOR 6.8UH	
L6011		1-412-525-31	INDUCTOR 10UH	
L6012		1-406-971-21	INDUCTOR 10UH	
			<IC LINK>	
PS6001	⚠	1-533-595-31	LINK, IC	
PS6002	⚠	1-533-595-31	LINK, IC	
PS6003	⚠	1-533-597-31	LINK, IC	
			<TRANSISTOR>	
Q6001		8-729-120-28	TRANSISTOR 2SC1623-L5L6	
Q6002		8-729-120-28	TRANSISTOR 2SC1623-L5L6	
Q6003		8-729-920-72	TRANSISTOR 2SA1037K-T-146-QR	
Q6004		8-729-120-28	TRANSISTOR 2SC1623-L5L6	
Q6005		8-729-920-72	TRANSISTOR 2SA1037K-T-146-QR	
Q6006		8-729-120-28	TRANSISTOR 2SC1623-L5L6	
Q6007		8-729-028-10	TRANSISTOR IRFI744G-LF	
Q6008		8-729-028-10	TRANSISTOR IRFI744G-LF	
Q6009		8-729-140-97	TRANSISTOR 2SB734-34	
Q6010		8-729-120-28	TRANSISTOR 2SC1623-L5L6	
Q6011		8-729-120-28	TRANSISTOR 2SC1623-L5L6	
Q6012		8-729-920-72	TRANSISTOR 2SA1037K-T-146-QR	
Q6013		8-729-820-82	TRANSISTOR 2SA1208-T	
Q6014		8-729-028-10	TRANSISTOR IRFI744G-LF	
Q6015		8-729-028-10	TRANSISTOR IRFI744G-LF	
Q6016		8-729-920-72	TRANSISTOR 2SA1037K-T-146-QR	
Q6017		8-729-920-72	TRANSISTOR 2SA1037K-T-146-QR	
Q6018		8-729-120-28	TRANSISTOR 2SC1623-L5L6	
			<RESISTOR>	

R6000	⚠	1-202-885-91	SOLID	1M	20%	1/2W
R6001		1-216-049-00	RES,CHIP	1K	5%	1/10W
R6002	⚠	1-218-265-21	METAL	8.2M	5%	1W
R6003		1-216-683-11	METAL CHIP	22K	0.50%	1/10W
R6004		1-215-481-00	METAL	330K	1%	1/4W
R6005		1-215-481-00	METAL	330K	1%	1/4W
R6006		1-215-482-00	METAL	360K	1%	1/4W
R6007		1-216-065-00	RES,CHIP	4.7K	5%	1/10W
R6008		1-216-099-00	RES,CHIP	120K	5%	1/10W
R6009		1-215-479-00	METAL	270K	1%	1/4W
R6010		1-215-479-00	METAL	270K	1%	1/4W
R6011		1-216-675-11	METAL CHIP	10K	0.50%	1/10W
R6012		1-216-657-11	METAL CHIP	1.8K	0.50%	1/10W
R6013		1-202-962-11	CEMENTED	3.3	5%	10W
R6014		1-216-089-00	RES,CHIP	47K	5%	1/10W
R6015		1-247-895-00	CARBON	470K	5%	1/4W
R6016		1-216-089-00	RES,CHIP	47K	5%	1/10W
R6017		1-216-057-00	RES,CHIP	2.2K	5%	1/10W
R6018		1-216-089-00	RES,CHIP	47K	5%	1/10W
R6019		1-216-089-00	RES,CHIP	47K	5%	1/10W
R6020		1-216-691-11	METAL CHIP	47K	0.50%	1/10W
R6021		1-216-081-00	RES,CHIP	22K	5%	1/10W
R6022		1-247-791-91	CARBON	22	5%	1/4W
R6023		1-216-049-00	RES,CHIP	1K	5%	1/10W
R6024	⚠	1-240-303-11	CMT,MELF	0.22	5%	10W
R6025		1-249-402-11	CARBON	56	5%	1/4W F
R6026	⚠	1-240-303-11	CMT,MELF	0.22	5%	10W
R6027		1-216-065-00	RES,CHIP	4.7K	5%	1/10W
R6028		1-249-437-11	CARBON	47K	5%	1/4W
R6029		1-216-065-00	RES,CHIP	4.7K	5%	1/10W
R6030		1-216-049-00	RES,CHIP	1K	5%	1/10W
R6031		1-216-073-00	RES,CHIP	10K	5%	1/10W
R6033	⚠	1-220-886-61	FUSIBLE	0.1	10%	1W F
R6034		1-216-113-00	RES,CHIP	470K	5%	1/10W
R6035		1-216-049-00	RES,CHIP	1K	5%	1/10W

The components identified by shading and mark ⚠ are critical for safety.
Replace only with part number specified.

G **CG**

REF. NO.	PART NO.	DESCRIPTION			REMARK
R6036	1-216-073-00	RES,CHIP	10K	5%	1/10W
R6037	1-216-065-00	RES,CHIP	4.7K	5%	1/10W
R6038	1-216-295-00	SHORT	0		
R6039	1-216-073-00	RES,CHIP	10K	5%	1/10W
R6040	1-216-073-00	RES,CHIP	10K	5%	1/10W
R6041	1-249-397-11	CARBON	22	5%	1/4W F
R6042	1-249-397-11	CARBON	22	5%	1/4W F
R6043	1-249-425-11	CARBON	4.7K	5%	1/4W F
R6044	1-249-425-11	CARBON	4.7K	5%	1/4W F
R6045	1-216-657-11	METAL CHIP	1.8K	0.50%	1/10W
R6046	1-216-081-00	RES,CHIP	22K	5%	1/10W
R6047	1-249-437-11	CARBON	47K	5%	1/4W
R6048	1-216-065-00	RES,CHIP	4.7K	5%	1/10W
R6049	1-216-073-00	RES,CHIP	10K	5%	1/10W
R6050	1-216-049-91	RES,CHIP	1K	5%	1/10W
R6051	1-216-674-11	METAL CHIP	9.1K	0.50%	1/10W
R6052	1-216-049-00	RES,CHIP	1K	5%	1/10W
R6053	1-249-417-11	CARBON	1K	5%	1/4W
R6054	1-216-049-00	RES,CHIP	1K	5%	1/10W
R6055	1-216-065-00	RES,CHIP	4.7K	5%	1/10W
R6056	1-216-073-00	RES,CHIP	10K	5%	1/10W
R6057	1-216-073-00	RES,CHIP	10K	5%	1/10W
R6058	1-216-073-00	RES,CHIP	10K	5%	1/10W
R6059	1-216-065-00	RES,CHIP	4.7K	5%	1/10W
R6060	1-249-413-11	CARBON	470	5%	1/4W F
R6061	1-215-477-00	METAL	220K	1%	1/4W
R6062	1-249-417-11	CARBON	1K	5%	1/4W F
R6063	1-249-397-11	CARBON	22	5%	1/4W F
R6064	1-249-397-11	CARBON	22	5%	1/4W F
R6065	1-249-441-11	CARBON	100K	5%	1/4W
R6066	1-216-366-00	METAL OXIDE	0.56	5%	2W F
R6067	1-249-425-11	CARBON	4.7K	5%	1/4W F
R6068	1-249-425-11	CARBON	4.7K	5%	1/4W F
R6069	1-215-477-00	METAL	220K	1%	1/4W
R6070	1-249-417-11	CARBON	1K	5%	1/4W F
R6071	1-215-453-00	METAL	22K	1%	1/4W
R6072	1-215-476-00	METAL	200K	1%	1/4W
R6073	1-216-041-00	RES,CHIP	470	5%	1/10W
R6075	1-216-358-11	METAL OXIDE	5.6	5%	1W F
R6079	1-249-377-11	CARBON	0.47	5%	1/4W F
R6080	1-249-377-11	CARBON	0.47	5%	1/4W F
R6081	1-249-377-11	CARBON	0.47	5%	1/4W F
R6082	1-249-377-11	CARBON	0.47	5%	1/4W F
R6083	1-249-377-11	CARBON	0.47	5%	1/4W F
R6084	1-249-377-11	CARBON	0.47	5%	1/4W F
R6085	⚠ 1-212-849-61	FUSIBLE	4.7	5%	1/4W F
R6086	1-216-073-00	RES,CHIP	10K	5%	1/10W
R6087	1-216-065-00	RES,CHIP	4.7K	5%	1/10W
R6088	1-216-065-00	RES,CHIP	4.7K	5%	1/10W
R6089	1-216-057-00	RES,CHIP	2.2K	5%	1/10W
R6094	1-216-073-00	RES,CHIP	10K	5%	1/10W
		<RELAY>			
RY6003	⚠ 1-515-999-11	RELAY, POWER			
		<TRANSFORMER>			
T6002	⚠ 1-431-207-11	TRANSFORMER, LINE FILTER			
T6004	⚠ 1-431-732-12	TRANSFORMER, CONVERTER (SRT)			
T6005	⚠ 1-429-807-12	TRANSFORMER, CONVERTER (PIT)			

****

REF. NO.	PART NO.	DESCRIPTION			REMARK
	* A-1331-833-A	CG MOUNT			
		**********			
		<CAPACITOR>			
C733	1-161-754-00	CERAMIC	0.001MF	10%	2KV
C734	1-102-114-00	CERAMIC	470PF	10%	50V
C735	1-161-830-00	CERAMIC	0.0047MF		500V
C736	1-162-115-00	CERAMIC	330PF	10%	2KV
C737	1-107-662-11	ELECT	22MF	20%	250V
C738	1-101-880-00	CERAMIC	47PF	5%	50V
C739	1-104-664-11	ELECT	47MF	20%	25V
C740	1-102-114-00	CERAMIC	470PF	10%	50V
		<CONNECTOR>			
CN731	1-695-915-11	TAB (CONTACT)			
CN732	* 1-564-508-11	PLUG, CONNECTOR 5P			
CN733	* 1-564-511-11	PLUG, CONNECTOR 8P			
CN734	* 1-508-784-00	PIN, CONNECTOR (5mm PITCH) 1P			
CN735	⚠ 1-251-182-31	SOCKET, PICTURE TUBE			
CN736	* 1-564-512-11	PLUG, CONNECTOR 9P			
CN737	* 1-564-512-11	PLUG, CONNECTOR 9P			
		<DIODE>			
D731	8-719-991-33	DIODE 1SS133T-77			
D732	8-719-991-33	DIODE 1SS133T-77			
D733	8-719-991-33	DIODE 1SS133T-77			
D735	8-719-991-33	DIODE 1SS133T-77			
D736	8-719-991-33	DIODE 1SS133T-77			
		<COIL>			
L731	1-408-623-31	INDUCTOR 470UH			
L732	1-408-619-31	INDUCTOR 220UH			
		<TRANSISTOR>			
Q731	8-729-200-17	TRANSISTOR 2SA1091-O			
Q732	8-729-045-56	TRANSISTOR 2SC2611-15			
Q733	8-729-119-78	TRANSISTOR 2SC2785-HFE			
		<RESISTOR>			
R731	1-219-743-11	CARBON	100	5%	1/2W
R732	1-260-132-11	CARBON	560K	5%	1/2W
R733	1-215-923-00	METAL OXIDE	10K	5%	3W F
R735	1-247-807-31	CARBON	100	5%	1/4W
R736	1-249-425-11	CARBON	4.7K	5%	1/4W
R737	1-260-099-11	CARBON	1K	5%	1/2W
R738	1-249-408-11	CARBON	180	5%	1/4W
R739	1-260-133-11	CARBON	680K	5%	1/2W
R740	1-202-818-00	SOLID	1K	20%	1/2W
R741	1-249-393-11	CARBON	10	5%	1/4W
R742	1-247-815-91	CARBON	220	5%	1/4W
R744	1-247-891-00	CARBON	330K	5%	1/4W
R745	1-247-843-11	CARBON	3.3K	5%	1/4W
R746	1-202-814-11	SOLID	33K	20%	1/2W
		<SPARK GAP>			
SG731	1-519-422-11	GAP, SPARK			
SG732	1-519-422-11	GAP, SPARK			
SG733	1-519-422-11	GAP, SPARK			

****

The components identified by shading and mark ⚠ are critical for safety.
Replace only with part number specified.

KP-EF41HK2/ME2/MN2/SN2, EF48HK2/ME2/MN2/SN2, EF53HK2/ME2/MN2/SN2 RM-871

CB **CR**

REF. NO.	PART NO.	DESCRIPTION				REMARK
	* A-1331-834-A	CB MOUNT **********				
		<CAPACITOR>				
C762	1-126-964-11	ELECT	10MF	20%	50V	
C763	1-161-754-00	CERAMIC	0.001MF	10%	2KV	
C764	1-102-112-00	CERAMIC	330PF	10%	50V	
C765	1-161-830-00	CERAMIC	0.0047MF	500V		
C766	1-162-115-00	CERAMIC	330PF	10%	2KV	
C767	1-107-662-11	ELECT	22MF	20%	250V	
C768	1-101-880-00	CERAMIC	47PF	5%	50V	
C769	1-104-664-11	ELECT	47MF	20%	25V	
C770	1-102-114-00	CERAMIC	470PF	10%	50V	
		<CONNECTOR>				
CN761	1-695-915-11	TAB (CONTACT)				
CN762	* 1-564-508-11	PLUG, CONNECTOR 5P				
CN763	* 1-508-784-00	PIN, CONNECTOR (5mm PITCH) 1P				
CN764	⚠ 1-251-182-31	SOCKET, PICTURE TUBE				
CN765	* 1-564-512-11	PLUG, CONNECTOR 9P				
CN766	* 1-564-513-11	PLUG, CONNECTOR 10P				
		<DIODE>				
D761	8-719-991-33	DIODE 1SS133T-77				
D762	8-719-991-33	DIODE 1SS133T-77				
D763	8-719-991-33	DIODE 1SS133T-77				
D765	8-719-991-33	DIODE 1SS133T-77				
D766	8-719-991-33	DIODE 1SS133T-77				
		<COIL>				
L761	1-408-623-31	INDUCTOR 470UH				
L762	1-408-619-31	INDUCTOR 220UH				
		<TRANSISTOR>				
Q761	8-729-200-17	TRANSISTOR 2SA1091-O				
Q762	8-729-045-56	TRANSISTOR 2SC2611-15				
Q763	8-729-119-78	TRANSISTOR 2SC2785-HFE				
Q764	8-729-119-76	TRANSISTOR 2SA1175-HFE				
		<RESISTOR>				
R761	1-219-743-11	CARBON	100	5%	1/2W	
R762	1-260-132-11	CARBON	560K	5%	1/2W	
R763	1-215-923-00	METAL OXIDE	10K	5%	3W	F
R765	1-247-807-31	CARBON	100	5%	1/4W	
R766	1-260-099-11	CARBON	1K	5%	1/2W	
R767	1-249-425-11	CARBON	4.7K	5%	1/4W	
R768	1-260-133-11	CARBON	680K	5%	1/2W	
R769	1-202-818-00	SOLID	1K	20%	1/2W	
R770	1-247-815-91	CARBON	220	5%	1/4W	
R771	1-219-743-11	CARBON	100	5%	1/2W	
R772	1-249-393-11	CARBON	10	5%	1/4W	
R773	1-249-413-11	CARBON	470	5%	1/4W	
R774	1-247-895-91	CARBON	470K	5%	1/4W	
R775	1-249-427-11	CARBON	6.8K	5%	1/4W	
R776	1-249-437-11	CARBON	47K	5%	1/4W	
R777	1-249-427-11	CARBON	6.8K	5%	1/4W	
R778	1-202-814-11	SOLID	33K	20%	1/2W	
R779	1-247-815-91	CARBON	220	5%	1/4W	
		<SPARK GAP>				
SG761	1-519-422-11	GAP, SPARK				
SG762	1-519-422-11	GAP, SPARK				
SG763	1-519-422-11	GAP, SPARK				

****

REF. NO.	PART NO.	DESCRIPTION				REMARK
	* A-1331-835-A	CR MOUNT **********				
		<CAPACITOR>				
C702	1-102-113-00	CERAMIC	390PF	10%	50V	
C703	1-104-664-11	ELECT	47MF	20%	25V	
C705	⚠ 1-161-754-00	CERAMIC	0.001MF	10%	2KV	
C708	1-101-880-00	CERAMIC	47PF	5%	50V	
C709	1-162-115-00	CERAMIC	330PF	10%	2KV	
C710	1-102-114-00	CERAMIC	470PF	10%	50V	
C712	1-107-662-11	ELECT	22MF	20%	250V	
C713	1-104-664-11	ELECT	47MF	20%	25V	
		<CONNECTOR>				
CN701	1-695-915-11	TAB (CONTACT)				
CN702	* 1-564-511-11	PLUG, CONNECTOR 8P				
CN703	* 1-564-510-11	PLUG, CONNECTOR 7P				
CN704	* 1-508-784-00	PIN, CONNECTOR (5mm PITCH) 1P				
CN705	⚠ 1-251-182-31	SOCKET, PICTURE TUBE				
CN706	* 1-564-512-11	PLUG, CONNECTOR 9P				
		<DIODE>				
D701	8-719-991-33	DIODE 1SS133T-77				
D704	8-719-991-33	DIODE 1SS133T-77				
D705	8-719-991-33	DIODE 1SS133T-77				
D706	8-719-991-33	DIODE 1SS133T-77				
D708	8-719-991-33	DIODE 1SS133T-77				
D709	8-719-109-84	DIODE RD5.1ESB1				
		<COIL>				
L701	1-410-682-31	INDUCTOR 470UH				
L702	1-408-619-31	INDUCTOR 220UH				
		<TRANSISTOR>				
Q701	8-729-200-17	TRANSISTOR 2SA1091-O				
Q703	8-729-045-56	TRANSISTOR 2SC2611-15				
Q704	8-729-119-78	TRANSISTOR 2SC2785-HFE				
Q705	8-729-119-76	TRANSISTOR 2SA1175-HFE				
Q706	8-729-119-76	TRANSISTOR 2SA1175-HFE				
		<RESISTOR>				
R701	1-219-743-11	CARBON	100	5%	1/2W	
R704	1-260-132-11	CARBON	560K	5%	1/2W	
R706	1-249-425-11	CARBON	4.7K	5%	1/4W	
R707	1-247-807-31	CARBON	100	5%	1/4W	
R708	1-249-411-11	CARBON	330	5%	1/4W	
R709	1-260-099-11	CARBON	1K	5%	1/2W	
R710	1-249-393-11	CARBON	10	5%	1/4W	
R711	1-215-923-00	METAL OXIDE	10K	5%	3W	F
R714	1-202-818-00	SOLID	1K	20%	1/2W	
R715	1-260-133-11	CARBON	680K	5%	1/2W	
R716	1-247-815-91	CARBON	220	5%	1/4W	
R717	1-249-435-11	CARBON	33K	5%	1/4W	
R718	1-249-437-11	CARBON	47K	5%	1/4W	
R719	1-219-743-11	CARBON	100	5%	1/2W	
R720	1-249-425-11	CARBON	4.7K	5%	1/4W	

CR V2 D

REF. NO.	PART NO.	DESCRIPTION			REMARK
R721	1-202-814-11	SOLID	33K	20%	1/2W
R722	1-247-863-91	CARBON	22K	5%	1/4W
R723	1-249-437-11	CARBON	47K	5%	1/4W
		<SPARK GAP>			
SG701	1-519-422-11	GAP, SPARK			
SG702	1-519-422-11	GAP, SPARK			
SG703	1-519-422-11	GAP, SPARK			

****

* A-1342-428-A V2 MOUNT
****

		<CAPACITOR>			
C3506	1-163-038-00	CERAMIC CHIP	0.1MF		25V
C3507	1-126-933-11	ELECT	100MF	20%	16V
C3509	1-164-004-11	CERAMIC CHIP	0.1MF	10%	25V
C3510	1-164-505-11	CERAMIC CHIP	2.2MF		16V
C3511	1-126-963-11	ELECT	4.7MF	20%	50V
C3512	1-163-009-11	CERAMIC CHIP	0.001MF	10%	50V
C3513	1-163-239-11	CERAMIC CHIP	33PF	5%	50V
C3514	1-163-239-11	CERAMIC CHIP	33PF	5%	50V
C3515	1-109-982-11	CERAMIC CHIP	1MF	10%	10V
C3517	1-163-251-11	CERAMIC CHIP	100PF	5%	50V
C3519	1-163-113-00	CERAMIC CHIP	68PF	5%	50V
C3522	1-104-664-11	ELECT	47MF	20%	16V
C3524	1-163-038-00	CERAMIC CHIP	0.1MF		25V
C3525	1-126-933-11	ELECT	100MF	20%	16V
C3530	1-163-038-00	CERAMIC CHIP	0.1MF		25V
C3532	1-163-038-00	CERAMIC CHIP	0.1MF		25V
C3538	1-163-233-11	CERAMIC CHIP	18PF	5%	50V
C3539	1-163-009-11	CERAMIC CHIP	0.001MF	10%	50V
		<CONNECTOR>			
CN3501	* 1-564-508-11	PLUG, CONNECTOR 5P			
CN3502	* 1-564-515-11	PLUG, CONNECTOR 12P			
		<DIODE>			
D3502	8-719-914-44	DIODE DAP202K			
D3503	8-719-105-46	DIODE RD3.3M-B2			
		<FERRITE BEAD>			
FB3501	1-410-682-31	INDUCTOR 470UH			
FB3502	1-410-397-21	FERRITE	1.1UH		
FB3503	1-410-397-21	FERRITE	1.1UH		
FB3504	1-410-397-21	FERRITE	1.1UH		
FB3505	1-410-397-21	FERRITE	1.1UH		
		<IC>			
IC3501	8-759-476-87	IC SAA5261			
		<CHIP CONDUCTOR>			
JR3501	1-216-295-00	SHORT	0		
		<TRANSISTOR>			
Q3501	8-729-230-49	TRANSISTOR 2SC2712-YG			
Q3502	8-729-120-28	TRANSISTOR 2SC1623-L5L6			
Q3506	8-729-901-00	TRANSISTOR DTC124EK			
Q3507	8-729-120-28	TRANSISTOR 2SC1623-L5L6			
Q3509	8-729-120-28	TRANSISTOR 2SC1623-L5L6			
Q3510	8-729-120-28	TRANSISTOR 2SC1623-L5L6			
		<RESISTOR>			
R3501	1-216-295-00	SHORT	0		
R3504	1-216-295-00	SHORT	0		
R3507	1-216-295-00	SHORT	0		
R3508	1-216-295-00	SHORT	0		
R3509	1-216-295-00	SHORT	0		
R3511	1-216-025-00	RES,CHIP	100	5%	1/10W
R3512	1-216-295-00	SHORT	0		
R3514	1-216-025-00	RES,CHIP	100	5%	1/10W
R3515	1-216-073-00	RES,CHIP	10K	5%	1/10W
R3517	1-216-295-00	SHORT	0		
R3518	1-216-295-00	SHORT	0		
R3519	1-216-295-00	SHORT	0		
R3522	1-216-295-00	SHORT	0		
R3526	1-216-295-00	SHORT	0		
R3527	1-216-065-00	RES,CHIP	4.7K	5%	1/10W
R3528	1-216-065-00	RES,CHIP	4.7K	5%	1/10W
R3529	1-216-049-00	RES,CHIP	1K	5%	1/10W
R3533	1-216-025-00	RES,CHIP	100	5%	1/10W
R3535	1-216-295-00	SHORT	0		
R3539	1-216-025-00	RES,CHIP	100	5%	1/10W
R3540	1-216-295-00	SHORT	0		
R3542	1-216-049-00	RES,CHIP	1K	5%	1/10W
R3544	1-216-295-00	SHORT	0		
R3546	1-216-025-00	RES,CHIP	100	5%	1/10W
R3547	1-216-057-00	RES,CHIP	2.2K	5%	1/10W
R3548	1-216-049-00	RES,CHIP	1K	5%	1/10W
R3549	1-216-049-00	RES,CHIP	1K	5%	1/10W
R3550	1-216-041-00	RES,CHIP	470	5%	1/10W
R3551	1-216-025-00	RES,CHIP	100	5%	1/10W
R3552	1-216-025-00	RES,CHIP	100	5%	1/10W
R3554	1-216-083-00	RES,CHIP	27K	5%	1/10W
R3555	1-216-049-00	RES,CHIP	1K	5%	1/10W
R3556	1-216-041-00	RES,CHIP	470	5%	1/10W
R3557	1-216-295-00	SHORT	0		
R3558	1-216-025-00	RES,CHIP	100	5%	1/10W
R3559	1-216-049-00	RES,CHIP	1K	5%	1/10W
R3560	1-216-041-00	RES,CHIP	470	5%	1/10W
R3563	1-216-049-00	RES,CHIP	1K	5%	1/10W
R3571	1-216-049-00	RES,CHIP	1K	5%	1/10W
		<CRYSTAL>			
X3501	1-578-774-11	VIBRATOR, CRYSTAL			

****

* A-1346-763-A D COMPL
****

	4-066-101-01	SPACER, INSULATING			
	4-070-912-01	HEAT SINK, V OUT			
	4-382-854-11	SCREW (M3X10), P, SW (+)			
		<CAPACITOR>			
C1501	1-163-005-11	CERAMIC CHIP	470PF	10%	50V
C1503	1-137-399-11	FILM	0.1MF	5%	100V
C1504	1-164-690-91	CERAMIC CHIP	0.0022MF	5%	50V
C1506	1-126-969-11	ELECT	220MF	20%	50V
C1507	1-163-243-11	CERAMIC CHIP	47PF	5%	50V
C1508	1-137-401-11	FILM	0.22MF	10%	100V
C1509	1-163-251-11	CERAMIC CHIP	100PF	5%	50V

REF. NO.	PART NO.	DESCRIPTION			REMARK
C1510	1-126-972-11	ELECT	1000MF	20%	50V
C1511	1-126-972-11	ELECT	1000MF	20%	50V
C1512	1-126-960-11	ELECT	1MF	20%	50V
C1513	1-164-232-11	CERAMIC CHIP	0.01MF	10%	50V
C1514	1-164-232-11	CERAMIC CHIP	0.01MF	10%	50V
C1516	1-164-004-11	CERAMIC CHIP	0.1MF	10%	25V
C1517	1-126-964-11	ELECT	10MF	20%	50V
C1518	1-126-933-11	ELECT	100MF	20%	16V
C1519	1-126-933-11	ELECT	100MF	20%	16V
C1520	1-126-964-11	ELECT	10MF	20%	50V
C1521	1-164-232-11	CERAMIC CHIP	0.01MF	10%	50V
C1523	1-163-243-11	CERAMIC CHIP	47PF	5%	50V
C1524	1-136-177-00	FILM	1MF	5%	50V
C1525	1-104-665-11	ELECT	100MF	20%	25V
C1526	1-104-664-11	ELECT	47MF	20%	25V
C1527	1-163-145-00	CERAMIC CHIP	0.0015MF	5%	50V
C1528	1-163-145-00	CERAMIC CHIP	0.0015MF	5%	50V
C1529	1-164-690-91	CERAMIC CHIP	0.0022MF	5%	50V
C1530	1-104-664-11	ELECT	47MF	20%	16V
C1531	1-164-232-11	CERAMIC CHIP	0.01MF	10%	50V
C1532	1-126-960-11	ELECT	1MF	20%	50V
C1601	1-163-009-11	CERAMIC CHIP	0.001MF	10%	50V
C1602	1-163-009-11	CERAMIC CHIP	0.001MF	10%	50V
C1603	1-130-495-00	FILM	0.1MF	5%	50V
C1604	1-130-495-00	FILM	0.1MF	5%	50V
C1605	1-107-715-11	ELECT	22MF	20%	50V
C1606	1-164-232-11	CERAMIC CHIP	0.01MF	10%	50V
C1607	1-137-370-11	FILM	0.01MF	5%	50V
C1610	1-126-960-11	ELECT	1MF	20%	50V
C1611	1-126-960-11	ELECT	1MF	20%	50V
C1612	1-126-960-11	ELECT	1MF	20%	50V
C1613	1-126-967-11	ELECT	47MF	20%	50V
C1614	1-126-967-11	ELECT	47MF	20%	50V
C1617	1-130-495-00	FILM	0.1MF	5%	50V
C1618	1-130-495-00	FILM	0.1MF	5%	50V
C1619	1-164-004-11	CERAMIC CHIP	0.1MF	10%	25V
C1621	1-104-665-11	ELECT	100MF	20%	25V
C1622	1-164-690-91	CERAMIC CHIP	0.0022MF	5%	50V
C1624	1-130-495-00	FILM	0.1MF	5%	50V
C1626	1-130-495-00	FILM	0.1MF	5%	50V
C1627	1-164-690-91	CERAMIC CHIP	0.0022MF	5%	50V
C1628	1-126-964-11	ELECT	10MF	20%	50V
C1630	1-128-550-21	ELECT	2200MF	20%	50V
C1631	1-128-550-21	ELECT	2200MF	20%	50V
C1632	1-104-664-11	ELECT	47MF	20%	25V
C1633	1-104-664-11	ELECT	47MF	20%	25V
C1634	1-126-961-11	ELECT	2.2MF	20%	50V
C1635	1-104-666-11	ELECT	220MF	20%	25V
C1650	1-163-251-11	CERAMIC CHIP	100PF	5%	50V
C1651	1-163-251-11	CERAMIC CHIP	100PF	5%	50V
C1701	1-126-964-11	ELECT	10MF	20%	50V
C1702	1-126-964-11	ELECT	10MF	20%	50V
C1703	1-126-964-11	ELECT	10MF	20%	50V
C1704	1-126-964-11	ELECT	10MF	20%	50V
C1705	1-163-251-11	CERAMIC CHIP	100PF	5%	50V
C1706	1-163-251-11	CERAMIC CHIP	100PF	5%	50V
C1707	1-164-232-11	CERAMIC CHIP	0.01MF	10%	50V
C1708	1-126-935-11	ELECT	470MF	20%	16V
C1709	1-164-232-11	CERAMIC CHIP	0.01MF	10%	50V
C1710	1-163-243-11	CERAMIC CHIP	47PF	5%	50V
C1711	1-163-243-11	CERAMIC CHIP	47PF	5%	50V
C1715	1-164-232-11	CERAMIC CHIP	0.01MF	10%	50V
C1716	1-164-232-11	CERAMIC CHIP	0.01MF	10%	50V
C1717	1-164-232-11	CERAMIC CHIP	0.01MF	10%	50V
C1718	1-126-968-11	ELECT	100MF	20%	50V
C1719	1-126-968-11	ELECT	100MF	20%	50V
C1720	1-164-232-11	CERAMIC CHIP	0.01MF	10%	50V
C1721	1-164-232-11	CERAMIC CHIP	0.01MF	10%	50V
C1723	1-163-235-11	CERAMIC CHIP	22PF	5%	50V
C1724	1-164-004-11	CERAMIC CHIP	0.1MF	10%	25V
C1725	1-164-004-11	CERAMIC CHIP	0.1MF	10%	25V
C1726	1-164-004-11	CERAMIC CHIP	0.1MF	10%	25V
C1727	1-164-004-11	CERAMIC CHIP	0.1MF	10%	25V
C1802	1-164-232-11	CERAMIC CHIP	0.01MF	10%	50V
C1803	1-126-935-11	ELECT	470MF	20%	16V
C1804	1-126-964-11	ELECT	10MF	20%	50V
C1805	1-164-232-11	CERAMIC CHIP	0.01MF	10%	50V
C1806	1-104-665-11	ELECT	100MF	20%	25V
C1807	1-126-964-11	ELECT	10MF	20%	50V
C1808	1-164-232-11	CERAMIC CHIP	0.01MF	10%	50V
C1809	1-104-665-11	ELECT	100MF	20%	25V
C1810	1-164-232-11	CERAMIC CHIP	0.01MF	10%	50V
C1811	1-104-665-11	ELECT	100MF	20%	25V
C1812	1-126-964-11	ELECT	10MF	20%	50V
C1813	1-104-666-11	ELECT	220MF	20%	25V
C1814	1-164-004-11	CERAMIC CHIP	0.1MF	10%	25V
C1815	1-104-666-11	ELECT	220MF	20%	25V
C1816	1-126-964-11	ELECT	10MF	20%	50V
C1817	1-126-964-11	ELECT	10MF	20%	50V
C1818	1-164-232-11	CERAMIC CHIP	0.01MF	10%	50V
C1819	1-163-133-00	CERAMIC CHIP	470PF	5%	50V
C1820	1-163-133-00	CERAMIC CHIP	470PF	5%	50V
C1821	1-126-964-11	ELECT	10MF	20%	50V
C1822	1-164-005-11	CERAMIC CHIP	0.47MF		25V
C1823	1-163-251-11	CERAMIC CHIP	100PF	5%	50V
C1824	1-164-005-11	CERAMIC CHIP	0.47MF		25V
C1825	1-163-251-11	CERAMIC CHIP	100PF	5%	50V
C1826	1-104-665-11	ELECT	100MF	20%	25V
C1827	1-104-664-11	ELECT	47MF	20%	25V
C1828	1-104-664-11	ELECT	47MF	20%	25V
C1829	1-104-664-11	ELECT	47MF	20%	25V
C1830	1-126-964-11	ELECT	10MF	20%	50V

<CONNECTOR>

CN1501	*	1-564-506-11	PLUG, CONNECTOR 3P
CN1502		1-695-915-11	TAB (CONTACT)
CN1601	*	1-564-508-11	PLUG, CONNECTOR 5P
CN1604	*	1-564-507-11	PLUG, CONNECTOR 4P
CN1605	*	1-508-766-00	PIN, CONNECTOR (5mm PITCH) 4P
CN1606	*	1-779-890-11	CONNECTOR, BOARD TO BOARD 10P
CN1701	*	1-564-511-11	PLUG, CONNECTOR 8P
CN1702	*	1-564-516-11	PLUG, CONNECTOR 13P
CN1703	*	1-779-890-11	CONNECTOR, BOARD TO BOARD 10P
CN1705	*	1-564-505-11	PLUG, CONNECTOR 2P
CN1708	*	1-564-510-11	PLUG, CONNECTOR 7P
CN1801		1-695-299-11	CONNECTOR, BOARD TO BOARD 50P
CN1802	*	1-764-334-11	PLUG, CONNECTOR 11P
CN1803	*	1-564-513-11	PLUG, CONNECTOR 10P
CN1804	*	1-564-508-11	PLUG, CONNECTOR 5P
CN1805	*	1-779-890-11	CONNECTOR, BOARD TO BOARD 10P
CN1806	*	1-779-890-11	CONNECTOR, BOARD TO BOARD 10P
CN1807	*	1-564-511-11	PLUG, CONNECTOR 8P
CN1808	*	1-564-510-11	PLUG, CONNECTOR 7P

<DIODE>

D1501	8-719-109-89	DIODE RD5.6ESB2
D1502	8-719-908-03	DIODE GP08D
D1503	8-719-908-03	DIODE GP08D
D1504	8-719-991-33	DIODE 1SS133T-77
D1505	8-719-988-61	DIODE 1SS355TE-17
D1601	8-719-991-33	DIODE 1SS133T-77
D1603	8-719-991-33	DIODE 1SS133T-77

D

REF. NO.	PART NO.	DESCRIPTION	REMARK
D1604	8-719-991-33	DIODE 1SS133T-77	
D1606	8-719-991-33	DIODE 1SS133T-77	
D1611	8-719-921-86	DIODE MTZJ-13	
D1612	8-719-991-33	DIODE 1SS133T-77	
D1613	8-719-921-86	DIODE MTZJ-13	
D1614	8-719-991-33	DIODE 1SS133T-77	
D1615	8-719-991-33	DIODE 1SS133T-77	
D1616	8-719-991-33	DIODE 1SS133T-77	
D1617	8-719-403-00	DIODE MA3240-TX	
D1618	8-719-991-33	DIODE 1SS133T-77	
D1619	8-719-991-33	DIODE 1SS133T-77	
D1620	8-719-403-00	DIODE MA3240-TX	
D1621	8-719-403-00	DIODE MA3240-TX	
D1622	8-719-403-00	DIODE MA3240-TX	
D1703	8-719-109-89	DIODE RD5.6ESB2	
D1704	8-719-109-89	DIODE RD5.6ESB2	
D1705	8-719-109-84	DIODE RD5.1ESB1	
D1706	8-719-109-84	DIODE RD5.1ESB1	
D1707	8-719-109-84	DIODE RD5.1ESB1	
D1708	8-719-109-84	DIODE RD5.1ESB1	
D1709	8-719-109-81	DIODE RD4.7ESB2	
D1710	8-719-109-81	DIODE RD4.7ESB2	
D1711	8-719-109-81	DIODE RD4.7ESB2	
D1712	8-719-109-81	DIODE RD4.7ESB2	
D1801	8-719-923-60	DIODE MTZJ-T-77-9.1A	
D1802	8-719-923-60	DIODE MTZJ-T-77-9.1A	
D1803	8-719-923-60	DIODE MTZJ-T-77-9.1A	
D1804	8-719-923-60	DIODE MTZJ-T-77-9.1A	
D1805	8-719-923-60	DIODE MTZJ-T-77-9.1A	
D1806	8-719-923-60	DIODE MTZJ-T-77-9.1A	
		<IC>	
IC1501	8-759-192-71	IC STV9379	
IC1502	8-759-251-31	IC CA0007AM	
IC1503	8-759-998-98	IC LM358D	
IC1602	8-759-250-68	IC TDA7264	
IC1603	8-759-502-21	IC TDA2822M	
IC1701	8-752-895-09	IC CXP86213-002S	
IC1702	8-759-527-76	IC M24C08-MN6T	
IC1703	8-759-100-96	IC uPC4558G2	
IC1704	8-759-100-96	IC uPC4558G2	
IC1706	8-759-352-91	IC PST9143NL	
IC1801	8-759-144-82	IC uPC2405HF	
IC1802	8-759-095-63	IC PQ09RF2	
IC1803	8-759-231-58	IC TA7812S	
IC1804	8-759-069-28	IC PQ05RF11	
IC1805	8-759-100-96	IC uPC4558G2	
		<JACK>	
J1601	1-784-653-11	JACK, PHONO 2P (AUDIO OUT)	
		<CHIP CONDUCTOR>	
JR1502	1-216-295-91	SHORT 0	
JR1503	1-216-295-91	SHORT 0	
JR1504	1-216-295-91	SHORT 0	
JR1505	1-216-295-91	SHORT 0	
JR1506	1-216-295-91	SHORT 0	
JR1508	1-216-295-91	SHORT 0	
JR1510	1-216-295-91	SHORT 0	
JR1511	1-216-295-91	SHORT 0	
JR1512	1-216-295-91	SHORT 0	
JR1513	1-216-295-91	SHORT 0	
JR1514	1-216-295-91	SHORT 0	
JR1701	1-216-295-91	SHORT 0	

REF. NO.	PART NO.	DESCRIPTION	REMARK
		<COIL>	
L1501	1-412-524-11	INDUCTOR 8.2UH	
L1601	1-402-711-21	INDUCTOR 1UH	
L1602	1-402-711-21	INDUCTOR 1UH	
L1701	1-408-603-31	INDUCTOR 10UH	
L1702	1-408-598-31	INDUCTOR 3.9UH	
L1801	1-408-603-31	INDUCTOR 10UH	
		<TRANSISTOR>	
Q1501	8-729-120-28	TRANSISTOR 2SC1623-L5L6	
Q1502	8-729-920-72	TRANSISTOR 2SA1037K-T-146-QR	
Q1503	8-729-120-28	TRANSISTOR 2SC1623-L5L6	
Q1505	8-729-120-28	TRANSISTOR 2SC1623-L5L6	
Q1601	8-729-027-56	TRANSISTOR DTC143TKA-T146	
Q1602	8-729-120-28	TRANSISTOR 2SC1623-L5L6	
Q1603	8-729-027-56	TRANSISTOR DTC143TKA-T146	
Q1604	8-729-027-56	TRANSISTOR DTC143TKA-T146	
Q1605	8-729-027-56	TRANSISTOR DTC143TKA-T146	
Q1607	8-729-120-28	TRANSISTOR 2SC1623-L5L6	
Q1608	8-729-120-28	TRANSISTOR 2SC1623-L5L6	
Q1609	1-801-806-11	TRANSISTOR DTC144EKA-T146	
Q1610	8-729-920-72	TRANSISTOR 2SA1037K-T-146-QR	
Q1611	8-729-027-56	TRANSISTOR DTC143TKA-T146	
Q1612	8-729-027-56	TRANSISTOR DTC143TKA-T146	
Q1613	8-729-027-56	TRANSISTOR DTC143TKA-T146	
Q1614	8-729-920-72	TRANSISTOR 2SA1037K-T-146-QR	
Q1615	8-729-120-28	TRANSISTOR 2SC1623-L5L6	
Q1616	8-729-120-28	TRANSISTOR 2SC1623-L5L6	
Q1617	8-729-920-72	TRANSISTOR 2SA1037K-T-146-QR	
Q1701	8-729-120-28	TRANSISTOR 2SC1623-L5L6	
Q1702	8-729-120-28	TRANSISTOR 2SC1623-L5L6	
Q1703	8-729-120-28	TRANSISTOR 2SC1623-L5L6	
Q1704	8-729-120-28	TRANSISTOR 2SC1623-L5L6	
Q1705	8-729-120-28	TRANSISTOR 2SC1623-L5L6	
Q1706	8-729-120-28	TRANSISTOR 2SC1623-L5L6	
Q1707	1-801-806-11	TRANSISTOR DTC144EKA-T146	
Q1708	8-729-027-38	TRANSISTOR DTA144EKA-T146	
Q1709	8-729-120-28	TRANSISTOR 2SC1623-L5L6	
Q1710	8-729-120-28	TRANSISTOR 2SC1623-L5L6	
Q1711	8-729-120-28	TRANSISTOR 2SC1623-L5L6	
Q1801	8-729-120-28	TRANSISTOR 2SC1623-L5L6	
Q1802	8-729-120-28	TRANSISTOR 2SC1623-L5L6	
Q1803	8-729-120-28	TRANSISTOR 2SC1623-L5L6	
Q1804	8-729-120-28	TRANSISTOR 2SC1623-L5L6	
Q1805	8-729-120-28	TRANSISTOR 2SC1623-L5L6	
Q1806	8-729-120-28	TRANSISTOR 2SC1623-L5L6	
Q1807	8-729-120-28	TRANSISTOR 2SC1623-L5L6	
Q1808	8-729-920-72	TRANSISTOR 2SA1037K-T-146-QR	
Q1809	8-729-120-28	TRANSISTOR 2SC1623-L5L6	
		<RESISTOR>	
R1501	1-216-353-00	METAL OXIDE 2.2 5% 1W F	
R1502	1-216-671-11	METAL CHIP 6.8K 0.50% 1/10W	
R1504	1-216-675-11	METAL CHIP 10K 0.50% 1/10W	
R1505	1-249-377-11	CARBON 0.47 5% 1/4W F	
R1506	1-215-888-00	METAL OXIDE 220 5% 2W F	
R1507	1-216-081-00	RES,CHIP 22K 5% 1/10W	
R1508	1-249-383-11	CARBON 1.5 5% 1/4W F	
R1509	1-216-671-11	METAL CHIP 6.8K 0.50% 1/10W	
R1510	1-216-675-11	METAL CHIP 10K 0.50% 1/10W	
R1511	1-216-057-00	RES,CHIP 2.2K 5% 1/10W	
R1512	1-216-085-00	RES,CHIP 33K 5% 1/10W	
R1513	1-216-049-00	RES,CHIP 1K 5% 1/10W	
R1514	1-216-073-00	RES,CHIP 10K 5% 1/10W	
R1515	1-216-073-00	RES,CHIP 10K 5% 1/10W	
R1516	1-216-073-00	RES,CHIP 10K 5% 1/10W	

REF. NO.	PART NO.	DESCRIPTION			REMARK
R1517	1-216-081-00	RES,CHIP	22K	5%	1/10W
R1518	1-216-353-00	METAL OXIDE	2.2	5%	1W F
R1519	1-216-073-00	RES,CHIP	10K	5%	1/10W
R1520	1-216-089-00	RES,CHIP	47K	5%	1/10W
R1521	1-216-097-00	RES,CHIP	100K	5%	1/10W
R1522	1-216-089-91	RES,CHIP	47K	5%	1/10W
R1525	1-216-083-00	RES,CHIP	27K	5%	1/10W
R1526	1-216-083-00	RES,CHIP	27K	5%	1/10W
R1527	1-216-117-00	RES,CHIP	680K	5%	1/10W
R1528	1-216-117-00	RES,CHIP	680K	5%	1/10W
R1529	1-216-025-00	RES,CHIP	100	5%	1/10W
R1530	1-216-097-00	RES,CHIP	100K	5%	1/10W
R1531	1-216-089-00	RES,CHIP	47K	5%	1/10W
R1532	1-216-025-00	RES,CHIP	100	5%	1/10W
R1533	1-249-377-11	CARBON	0.47	5%	1/4W F
R1534	1-216-089-91	RES,CHIP	47K	5%	1/10W
R1537	1-216-073-00	RES,CHIP	10K	5%	1/10W
R1538	1-216-083-00	RES,CHIP	27K	5%	1/10W
R1539	1-216-073-00	RES,CHIP	10K	5%	1/10W
R1540	1-216-091-00	RES,CHIP	56K	5%	1/10W
R1541	1-216-091-00	RES,CHIP	56K	5%	1/10W
R1542	1-216-093-91	RES,CHIP	68K	5%	1/10W
R1543	1-216-093-91	RES,CHIP	68K	5%	1/10W
R1601	1-216-025-00	RES,CHIP	100	5%	1/10W
R1602	1-216-041-00	RES,CHIP	470	5%	1/10W
R1603	1-216-041-00	RES,CHIP	470	5%	1/10W
R1604	1-216-113-00	RES,CHIP	470K	5%	1/10W
R1605	1-216-113-00	RES,CHIP	470K	5%	1/10W
R1606	1-249-397-11	CARBON	22	5%	1/4W F
R1607	1-249-397-11	CARBON	22	5%	1/4W F
R1608	1-249-425-11	CARBON	4.7K	5%	1/4W F
R1609	1-216-081-00	RES,CHIP	22K	5%	1/10W
R1610	1-216-081-00	RES,CHIP	22K	5%	1/10W
R1611	1-249-425-11	CARBON	4.7K	5%	1/4W F
R1614	1-216-357-00	METAL OXIDE	4.7	5%	1W F
R1615	1-216-357-00	METAL OXIDE	4.7	5%	1W F
R1617	1-216-069-00	RES,CHIP	6.8K	5%	1/10W
R1618	1-216-081-00	RES,CHIP	22K	5%	1/10W
R1620	1-216-065-00	RES,CHIP	4.7K	5%	1/10W
R1625	1-216-061-00	RES,CHIP	3.3K	5%	1/10W
R1626	1-216-061-00	RES,CHIP	3.3K	5%	1/10W
R1629	1-216-049-00	RES,CHIP	1K	5%	1/10W
R1630	1-216-081-00	RES,CHIP	22K	5%	1/10W
R1631	1-249-389-11	CARBON	4.7	5%	1/4W F
R1632	1-216-089-91	RES,CHIP	47K	5%	1/10W
R1633	1-216-089-91	RES,CHIP	47K	5%	1/10W
R1634	1-216-081-00	RES,CHIP	22K	5%	1/10W
R1635	1-216-049-91	RES,CHIP	1K	5%	1/10W
R1636	1-216-075-00	RES,CHIP	12K	5%	1/10W
R1637	1-216-049-00	RES,CHIP	1K	5%	1/10W
R1638	1-216-073-00	RES,CHIP	10K	5%	1/10W
R1639	1-216-049-91	RES,CHIP	1K	5%	1/10W
R1640	1-216-025-00	RES,CHIP	100	5%	1/10W
R1641	1-216-065-00	RES,CHIP	4.7K	5%	1/10W
R1642	1-216-049-00	RES,CHIP	1K	5%	1/10W
R1643	1-216-073-00	RES,CHIP	10K	5%	1/10W
R1644	1-216-075-00	RES,CHIP	12K	5%	1/10W
R1645	1-216-041-00	RES,CHIP	470	5%	1/10W
R1648	1-249-381-11	CARBON	1	5%	1/4W F
R1649	1-216-089-00	RES,CHIP	47K	5%	1/10W
R1650	1-216-033-00	RES,CHIP	220	5%	1/10W
R1651	1-216-073-00	RES,CHIP	10K	5%	1/10W
R1652	1-216-099-00	RES,CHIP	120K	5%	1/10W
R1653	1-216-049-91	RES,CHIP	1K	5%	1/10W
R1654	1-216-049-91	RES,CHIP	1K	5%	1/10W
R1655	1-216-073-00	RES,CHIP	10K	5%	1/10W
R1656	1-216-295-00	SHORT	0		
R1701	1-216-065-00	RES,CHIP	4.7K	5%	1/10W
R1702	1-216-065-00	RES,CHIP	4.7K	5%	1/10W
R1703	1-216-065-00	RES,CHIP	4.7K	5%	1/10W
R1704	1-216-065-00	RES,CHIP	4.7K	5%	1/10W
R1705	1-216-065-00	RES,CHIP	4.7K	5%	1/10W
R1706	1-216-065-00	RES,CHIP	4.7K	5%	1/10W
R1707	1-216-025-00	RES,CHIP	100	5%	1/10W
R1708	1-216-025-00	RES,CHIP	100	5%	1/10W
R1709	1-216-025-00	RES,CHIP	100	5%	1/10W
R1710	1-216-049-00	RES,CHIP	1K	5%	1/10W
R1711	1-216-089-00	RES,CHIP	47K	5%	1/10W
R1712	1-216-073-00	RES,CHIP	10K	5%	1/10W
R1713	1-216-089-00	RES,CHIP	47K	5%	1/10W
R1714	1-216-073-00	RES,CHIP	10K	5%	1/10W
R1715	1-216-089-00	RES,CHIP	47K	5%	1/10W
R1716	1-216-033-00	RES,CHIP	220	5%	1/10W
R1717	1-216-089-00	RES,CHIP	47K	5%	1/10W
R1718	1-216-057-00	RES,CHIP	2.2K	5%	1/10W
R1719	1-216-033-00	RES,CHIP	220	5%	1/10W
R1720	1-216-033-00	RES,CHIP	220	5%	1/10W
R1721	1-216-033-00	RES,CHIP	220	5%	1/10W
R1722	1-216-033-00	RES,CHIP	220	5%	1/10W
R1725	1-216-065-00	RES,CHIP	4.7K	5%	1/10W
R1726	1-216-295-00	SHORT	0		
R1727	1-216-033-00	RES,CHIP	220	5%	1/10W
R1728	1-216-025-00	RES,CHIP	100	5%	1/10W
R1729	1-216-025-00	RES,CHIP	100	5%	1/10W
R1730	1-216-057-00	RES,CHIP	2.2K	5%	1/10W
R1731	1-216-033-00	RES,CHIP	220	5%	1/10W
R1732	1-216-049-00	RES,CHIP	1K	5%	1/10W
R1733	1-216-049-00	RES,CHIP	1K	5%	1/10W
R1734	1-216-049-00	RES,CHIP	1K	5%	1/10W
R1735	1-216-089-00	RES,CHIP	47K	5%	1/10W
R1736	1-216-033-00	RES,CHIP	220	5%	1/10W
R1737	1-216-033-00	RES,CHIP	220	5%	1/10W
R1738	1-216-025-00	RES,CHIP	100	5%	1/10W
R1739	1-216-073-00	RES,CHIP	10K	5%	1/10W
R1740	1-216-073-00	RES,CHIP	10K	5%	1/10W
R1741	1-216-033-00	RES,CHIP	220	5%	1/10W
R1742	1-216-033-00	RES,CHIP	220	5%	1/10W
R1743	1-216-025-00	RES,CHIP	100	5%	1/10W
R1744	1-216-033-00	RES,CHIP	220	5%	1/10W
R1745	1-216-073-00	RES,CHIP	10K	5%	1/10W
R1746	1-216-025-00	RES,CHIP	100	5%	1/10W
R1747	1-216-025-00	RES,CHIP	100	5%	1/10W
R1748	1-216-025-00	RES,CHIP	100	5%	1/10W
R1749	1-216-033-00	RES,CHIP	220	5%	1/10W
R1750	1-216-073-00	RES,CHIP	10K	5%	1/10W
R1751	1-216-033-00	RES,CHIP	220	5%	1/10W
R1752	1-216-025-00	RES,CHIP	100	5%	1/10W
R1753	1-216-073-00	RES,CHIP	10K	5%	1/10W
R1754	1-216-073-00	RES,CHIP	10K	5%	1/10W
R1755	1-216-025-00	RES,CHIP	100	5%	1/10W
R1756	1-216-073-00	RES,CHIP	10K	5%	1/10W
R1757	1-216-073-00	RES,CHIP	10K	5%	1/10W
R1758	1-216-025-00	RES,CHIP	100	5%	1/10W
R1759	1-216-073-00	RES,CHIP	10K	5%	1/10W
R1760	1-216-073-00	RES,CHIP	10K	5%	1/10W
R1762	1-216-065-00	RES,CHIP	4.7K	5%	1/10W
R1763	1-216-666-11	METAL CHIP	4.3K	0.50%	1/10W
R1764	1-216-065-00	RES,CHIP	4.7K	5%	1/10W
R1765	1-216-073-00	RES,CHIP	10K	5%	1/10W
R1766	1-216-049-91	RES,CHIP	1K	5%	1/10W
R1767	1-216-113-00	RES,CHIP	470K	5%	1/10W
R1768	1-216-049-91	RES,CHIP	1K	5%	1/10W
R1769	1-216-115-00	RES,CHIP	560K	5%	1/10W
R1770	1-216-049-91	RES,CHIP	1K	5%	1/10W
R1771	1-216-113-00	RES,CHIP	470K	5%	1/10W

The components identified by shading and mark ⚠ are critical for safety.
Replace only with part number specified.

D E

REF. NO.	PART NO.	DESCRIPTION			REMARK
R1772	1-216-049-91	RES,CHIP	1K	5%	1/10W
R1773	1-216-073-00	RES,CHIP	10K	5%	1/10W
R1774	1-216-025-00	RES,CHIP	100	5%	1/10W
R1775	1-216-115-00	RES,CHIP	560K	5%	1/10W
R1778	1-216-049-91	RES,CHIP	1K	5%	1/10W
R1786	1-216-025-00	RES,CHIP	100	5%	1/10W
R1787	1-216-025-00	RES,CHIP	100	5%	1/10W
R1788	1-216-025-00	RES,CHIP	100	5%	1/10W
R1789	1-216-049-00	RES,CHIP	1K	5%	1/10W
R1790	1-216-025-00	RES,CHIP	100	5%	1/10W
R1791	1-216-025-00	RES,CHIP	100	5%	1/10W
R1792	1-216-089-00	RES,CHIP	47K	5%	1/10W
R1793	1-216-089-00	RES,CHIP	47K	5%	1/10W
R1794	1-216-089-00	RES,CHIP	47K	5%	1/10W
R1795	1-216-089-00	RES,CHIP	47K	5%	1/10W
R1802	1-215-900-11	METAL OXIDE	22K	5%	2W F
R1803	1-216-073-00	RES,CHIP	10K	5%	1/10W
R1804	1-216-113-00	RES,CHIP	470K	5%	1/10W
R1805	1-216-113-00	RES,CHIP	470K	5%	1/10W
R1806	1-216-023-00	RES,CHIP	82	5%	1/10W
R1807	1-216-059-00	RES,CHIP	2.7K	5%	1/10W
R1808	1-216-059-00	RES,CHIP	2.7K	5%	1/10W
R1809	1-216-097-00	RES,CHIP	100K	5%	1/10W
R1810	1-216-023-00	RES,CHIP	82	5%	1/10W
R1811	1-216-025-00	RES,CHIP	100	5%	1/10W
R1812	1-216-025-00	RES,CHIP	100	5%	1/10W
R1813	1-216-049-00	RES,CHIP	1K	5%	1/10W
R1814	1-216-023-00	RES,CHIP	82	5%	1/10W
R1815	1-216-025-00	RES,CHIP	100	5%	1/10W
R1816	1-216-025-00	RES,CHIP	100	5%	1/10W
R1817	1-216-025-00	RES,CHIP	100	5%	1/10W
R1818	1-216-059-00	RES,CHIP	2.7K	5%	1/10W
R1819	1-216-059-00	RES,CHIP	2.7K	5%	1/10W
R1820	1-216-059-00	RES,CHIP	2.7K	5%	1/10W
R1821	1-216-025-00	RES,CHIP	100	5%	1/10W
R1822	1-216-089-00	RES,CHIP	47K	5%	1/10W
R1823	1-216-089-00	RES,CHIP	47K	5%	1/10W
R1824	1-216-089-00	RES,CHIP	47K	5%	1/10W
R1825	1-216-089-00	RES,CHIP	47K	5%	1/10W
R1826	1-216-089-00	RES,CHIP	47K	5%	1/10W
R1827	1-216-089-00	RES,CHIP	47K	5%	1/10W
R1828	1-216-089-00	RES,CHIP	47K	5%	1/10W
R1829	1-216-089-00	RES,CHIP	47K	5%	1/10W
R1830	1-216-073-00	RES,CHIP	10K	5%	1/10W
R1831	1-216-063-91	RES,CHIP	3.9K	5%	1/10W
R1832	1-216-049-00	RES,CHIP	1K	5%	1/10W
R1833	1-216-041-00	RES,CHIP	470	5%	1/10W
R1834	1-216-049-00	RES,CHIP	1K	5%	1/10W
R1835	1-216-049-00	RES,CHIP	1K	5%	1/10W
R1836	1-216-049-00	RES,CHIP	1K	5%	1/10W
R1837	1-216-049-00	RES,CHIP	1K	5%	1/10W
R1838	1-216-041-00	RES,CHIP	470	5%	1/10W
R1839	1-216-049-00	RES,CHIP	1K	5%	1/10W
R1840	1-216-049-00	RES,CHIP	1K	5%	1/10W
R1841	1-216-049-00	RES,CHIP	1K	5%	1/10W
R1842	1-216-049-00	RES,CHIP	1K	5%	1/10W
R1843	1-216-041-00	RES,CHIP	470	5%	1/10W
R1844	1-216-049-00	RES,CHIP	1K	5%	1/10W
R1845	1-216-049-00	RES,CHIP	1K	5%	1/10W
R1846	1-216-049-00	RES,CHIP	1K	5%	1/10W
R1847	1-216-049-00	RES,CHIP	1K	5%	1/10W
R1848	1-216-049-00	RES,CHIP	1K	5%	1/10W
R1849	1-216-041-00	RES,CHIP	470	5%	1/10W

<RELAY>

RY1601	1-755-028-11	RELAY	
RY1602	1-755-028-11	RELAY	

REF. NO.	PART NO.	DESCRIPTION	REMARK
		<TERMINAL BOARD>	
TB1601	1-694-303-11	TERMINAL, PUSH	
		<CRYSTAL>	
X1701	1-579-125-11	VIBRATOR, CERAMIC	

****

	* A-1346-764-A	E COMPL (41 inch MODEL)	
		*********	
	* A-1346-829-A	E COMPL (48/53 inch MODEL)	
		*********	
	4-382-854-11	SCREW (M3X10), P, SW (+)	
	7-682-952-09	SCREW +PSW 3X16	
		<CAPACITOR>	

C502	1-126-959-11	ELECT	0.47MF	20%	50V
C505	1-130-471-00	FILM	0.001MF	5%	50V
C506	1-126-933-11	ELECT	100MF	20%	16V
C507	1-126-965-11	ELECT	22MF	20%	50V
C508	1-102-228-00	CERAMIC	470PF	10%	500V
C509	1-106-383-00	MYLAR	0.047MF	10%	200V
C511	1-130-475-00	MYLAR	0.0022MF	5%	50V
C512	1-136-479-11	FILM	0.001MF	5%	50V
C513	1-126-965-11	ELECT	22MF	20%	50V
C514	⚠ 1-162-116-91	CERAMIC	680PF	10%	2KV
C515	⚠ 1-125-831-91	FILM	0.033MF	3%	630V
C516	⚠ 1-117-648-11	FILM	15000PF	3%	1.2KV
C518	1-130-495-00	FILM	0.1MF	5%	50V
C519	1-106-359-00	MYLAR	0.0047MF	10%	100V
C520	1-162-116-00	CERAMIC	680PF	10%	2KV
C521	1-162-116-00	CERAMIC	680PF	10%	2KV
C523	1-115-521-11	FILM	0.82MF	5%	250V
C524	1-106-359-00	MYLAR	0.0047MF	10%	100V
C526	1-102-228-00	CERAMIC	470PF	10%	500V
C527	1-126-970-11	ELECT	330MF	20%	50V
C528	1-107-957-11	ELECT	1MF	20%	250V
C529	1-109-844-11	FILM	0.68MF	5%	250V
C530	1-107-648-91	ELECT	100MF	20%	160V
C531	1-126-971-11	ELECT	470MF	20%	50V
C532	1-126-971-11	ELECT	470MF	20%	50V
C533	1-107-655-11	ELECT	47MF	20%	250V
C535	1-106-387-00	MYLAR	0.068MF	10%	200V
C536	1-137-374-11	FILM	0.047MF	5%	50V
C537	1-126-968-11	ELECT	100MF	20%	50V
C538	1-126-968-11	ELECT	100MF	20%	50V
C539	1-162-114-00	CERAMIC	0.0047MF		2KV
C540	1-137-372-11	FILM	0.022MF	5%	50V
C541	1-137-374-11	FILM	0.047MF	5%	50V
C542	1-126-934-11	ELECT	220MF	20%	16V
C544	1-104-665-11	ELECT	100MF	20%	25V
C545	1-104-665-11	ELECT	100MF	20%	25V
C548	1-102-244-00	CERAMIC	220PF	10%	500V
C550	1-126-935-11	ELECT	470MF	20%	16V
C551	1-126-935-11	ELECT	470MF	20%	16V
C554	1-130-062-91	FILM	0.0056MF	5%	630V
C555	1-126-960-11	ELECT	1MF	20%	50V
C556	1-130-495-00	MYLAR	0.1MF	5%	50V
C701	1-126-933-11	ELECT	100MF	20%	16V
C801	1-104-665-11	ELECT	100MF	20%	25V
C802	1-104-665-11	ELECT	100MF	20%	25V
C803	1-126-934-11	ELECT	220MF	20%	16V
C804	1-126-934-11	ELECT	220MF	20%	16V

REF. NO.	PART NO.	DESCRIPTION			REMARK
C805	1-126-934-11	ELECT	220MF	20%	16V
C806	1-126-934-11	ELECT	220MF	20%	16V
C807	1-137-374-11	FILM	0.047MF	5%	50V
C808	1-137-374-11	FILM	0.047MF	5%	50V
C809	1-137-374-11	FILM	0.047MF	5%	50V
C810	1-137-374-11	FILM	0.047MF	5%	50V
C811	1-102-074-00	CERAMIC	0.001MF	10%	50V
C812	1-136-169-00	FILM	0.22MF	5%	50V
C813	1-137-374-11	FILM	0.047MF	5%	50V
C815	1-104-665-11	ELECT	100MF	20%	25V
C816	1-130-014-00	FILM	470PF	5%	50V
C817	1-104-664-11	ELECT	47MF	20%	25V
C818	1-126-933-11	ELECT	100MF	20%	16V
C819	1-104-664-11	ELECT	47MF	20%	25V
C820	1-102-129-00	CERAMIC	0.01MF	10%	50V
C821	1-130-495-00	MYLAR	0.1MF	5%	50V
C822	1-107-648-91	ELECT	100MF	20%	160V
C823	1-104-664-11	ELECT	47MF	20%	25V
C824	1-126-964-11	ELECT	10MF	20%	50V (41 inch)
C825	1-104-665-11	ELECT	100MF	20%	25V
C826	1-136-165-00	FILM	0.1MF	5%	50V
C827	1-126-964-11	ELECT	10MF	20%	50V
C828	1-102-824-00	CERAMIC	470PF	5%	50V
C829	1-126-959-11	ELECT	0.47MF	20%	50V
C830	1-102-824-00	CERAMIC	470PF	5%	50V
C831	1-126-960-11	ELECT	1MF	20%	50V
C832	1-126-960-11	ELECT	1MF	20%	50V
C833	1-126-960-11	ELECT	1MF	20%	50V
C834	1-126-968-11	ELECT	100MF	20%	50V
C835	1-126-967-11	ELECT	47MF	20%	50V
C836	1-136-169-00	FILM	0.22MF	5%	50V
C837	1-126-963-11	ELECT	4.7MF	20%	50V
C838	1-104-665-11	ELECT	100MF	20%	25V
C839	1-137-374-11	FILM	0.047MF	5%	50V
C840	1-104-665-11	ELECT	100MF	20%	25V
C841	1-137-374-11	FILM	0.047MF	5%	50V
C842	1-137-374-11	FILM	0.047MF	5%	50V
C844	1-126-933-11	ELECT	100MF	20%	16V
C845	1-126-933-11	ELECT	100MF	20%	16V
C846	1-126-933-11	ELECT	100MF	20%	16V
C847	1-126-933-11	ELECT	100MF	20%	16V
C848	1-126-933-11	ELECT	100MF	20%	16V
C849	1-102-973-00	CERAMIC	100PF	5%	50V
C850	1-102-973-00	CERAMIC	100PF	5%	50V
C851	1-137-374-11	FILM	0.047MF	5%	50V
C852	1-137-374-11	FILM	0.047MF	5%	50V
C853	1-137-374-11	FILM	0.047MF	5%	50V
C854	1-126-933-11	ELECT	100MF	20%	16V
C855	1-102-973-00	CERAMIC	100PF	5%	50V
C856	1-102-973-00	CERAMIC	100PF	5%	50V
C857	1-126-933-11	ELECT	100MF	20%	16V
C858	1-104-665-11	ELECT	100MF	20%	25V
C859	1-104-665-11	ELECT	100MF	20%	25V
C860	1-126-933-11	ELECT	100MF	20%	16V
C861	1-137-374-11	FILM	0.047MF	5%	50V
C862	1-137-374-11	FILM	0.047MF	5%	50V
C863	1-137-374-11	FILM	0.047MF	5%	50V
C864	1-126-933-11	ELECT	100MF	20%	16V
C865	1-137-366-11	FILM	0.0022MF	5%	50V
C866	1-136-177-00	FILM	1MF	5%	50V
C867	1-104-664-11	ELECT	47MF	20%	25V
C868	1-164-096-11	CERAMIC	0.01MF		50V
C869	1-130-487-00	MYLAR	0.022MF	5%	50V
C870	1-164-096-11	CERAMIC	0.01MF		50V
C872	1-126-960-11	ELECT	1MF	20%	50V
C873	1-126-964-11	ELECT	10MF	20%	50V (41 inch)

REF. NO.	PART NO.	DESCRIPTION			REMARK
C876	1-102-973-00	CERAMIC	100PF	5%	50V
C877	1-102-973-00	CERAMIC	100PF	5%	50V
C880	1-104-664-11	ELECT	47MF	20%	25V
C881	1-102-973-00	CERAMIC	100PF	5%	50V
C882	1-102-973-00	CERAMIC	100PF	5%	50V
C883	1-102-973-00	CERAMIC	100PF	5%	50V
C884	1-104-665-11	ELECT	100MF	20%	25V
C885	1-104-664-11	ELECT	47MF	20%	25V
C886	1-102-973-00	CERAMIC	100PF	5%	50V
C887	1-102-973-00	CERAMIC	100PF	5%	50V
C888	1-102-973-00	CERAMIC	100PF	5%	50V
C889	1-104-665-11	ELECT	100MF	20%	25V
C897	1-104-665-11	ELECT	100MF	20%	25V

<CONNECTOR>

CN501	* 1-564-513-11	PLUG, CONNECTOR 10P	
CN502	* 1-580-689-11	PIN, CONNECTOR (PC BOARD) 4P	
CN503	* 1-580-689-11	PIN, CONNECTOR (PC BOARD) 4P	
CN504	* 1-580-689-11	PIN, CONNECTOR (PC BOARD) 4P	
CN505	* 1-506-371-00	PIN, CONNECTOR 2P	
CN506	* 1-779-892-11	CONNECTOR, BOARD TO BOARD 10P	
CN507	* 1-564-507-11	PLUG, CONNECTOR 4P	
CN508	1-695-915-11	TAB (CONTACT)	
CN651	* 1-779-892-11	CONNECTOR, BOARD TO BOARD 10P	
CN652	* 1-779-892-11	CONNECTOR, BOARD TO BOARD 10P	
CN801	* 1-564-507-11	PLUG, CONNECTOR 4P	
CN802	* 1-564-507-11	PLUG, CONNECTOR 4P	
CN803	* 1-564-507-11	PLUG, CONNECTOR 4P	
CN804	* 1-779-892-11	CONNECTOR, BOARD TO BOARD 10P	
CN805	* 1-508-766-00	PIN, CONNECTOR (5mm PITCH) 4P	
CN806	* 1-508-765-00	PIN, CONNECTOR (5mm PITCH) 3P	
CN807	* 1-564-509-11	PLUG, CONNECTOR 6P	
CN808	* 1-573-986-11	PIN, CONNECTOR (PC BOARD) 5P	
CN810	* 1-573-963-11	PIN, CONNECTOR (PC BOARD) 3P	

<DIODE>

D501	8-719-991-33	DIODE 1SS133T-77
D502	8-719-991-33	DIODE 1SS133T-77
D503	8-719-991-33	DIODE 1SS133T-77
D504	8-719-921-63	DIODE MTZJ-7.5B
D507	8-719-302-43	DIODE EL1Z
D508	8-719-900-26	DIODE ERD29-08J
D509	8-719-945-80	DIODE ERC06-15S
D510	8-719-991-33	DIODE 1SS133T-77
D511	8-719-302-43	DIODE EL1Z
D512	8-719-991-33	DIODE 1SS133T-77
D513	8-719-302-43	DIODE EL1Z
D514	8-719-908-03	DIODE GP08D
D515	8-719-908-03	DIODE GP08D
D517	8-719-018-82	DIODE RGP02-20EL-6394
D519	8-719-991-33	DIODE 1SS133T-77
D520	8-719-302-43	DIODE EL1Z
D521	8-719-302-43	DIODE EL1Z
D522	8-719-991-33	DIODE 1SS133T-77 (41 inch)
D523	8-719-991-33	DIODE 1SS133T-77 (41 inch)
D524	8-719-991-33	DIODE 1SS133T-77
D527	8-719-109-85	DIODE RD5.1ESB2
D701	8-719-109-63	DIODE RD3.0ESB2
D702	8-719-991-33	DIODE 1SS133T-77
D820	8-719-109-68	DIODE RD3.6ESB1
D829	8-719-109-84	DIODE RD5.1ESB1
D835	8-719-109-89	DIODE RD5.6ESB2
D840	8-719-991-33	DIODE 1SS133T-77
D842	8-719-991-33	DIODE 1SS133T-77
D845	8-719-991-33	DIODE 1SS133T-77
D846	8-719-991-33	DIODE 1SS133T-77

E

• The components identified by ⋈ in this manual have been carefully factory-selected for each set in order to satisfy regulations regarding X-ray radiation. Should replacement be required, replace only with the value originally used.

The components identified by shading and mark ⚠ are critical for safety.
Replace only with part number specified.

REF. NO.	PART NO.	DESCRIPTION	REMARK
		<FERRITE BEAD>	
FB501	1-410-397-21	FERRITE 1.1UH	
		<IC>	
IC501	8-759-133-90	IC uPC339C	
IC801	8-759-327-51	IC PA0053B	
IC802	8-759-327-51	IC PA0053B	
IC803	8-759-183-37	IC CA0007AD	
IC804	8-759-464-79	IC PM0011AS	
IC805	8-759-711-28	IC NJM2058D	
IC806	8-759-464-79	IC PM0011AS	
IC808	8-759-464-79	IC PM0011AS	
IC809	8-749-014-37	IC STK392-150	
IC810	8-749-014-37	IC STK392-150	
IC811	8-759-981-96	IC RC4560D	
IC812	8-759-701-56	IC NJM78M05FA	
IC813	8-759-701-65	IC NJM79M05FA	
		<COIL>	
L502	1-410-478-11	INDUCTOR 47UH	
L503	1-459-111-00	INDUCTOR 10mH	
L505	⚠ 1-416-637-11	COIL, HORIZONTAL LINEARITY	
L506	1-412-552-11	INDUCTOR 2.2mH	
L801	1-406-979-11	INDUCTOR 220UH	
L802	1-406-979-11	INDUCTOR 220UH	
L803	1-406-665-11	INDUCTOR 100UH	
		<NEON LAMP>	
NL501	1-519-108-99	LAMP, NEON	
		<IC LINK>	
PS601	⚠ 1-533-597-31	LINK, IC	
PS602	⚠ 1-533-597-31	LINK, IC	
PS603	⚠ 1-533-593-31	LINK, IC	
PS604	⚠ 1-533-593-31	LINK, IC	
PS605	⚠ 1-533-593-31	LINK, IC	
PS606	⚠ 1-533-593-31	LINK, IC	
PS607	⚠ 1-533-593-31	LINK, IC	
PS608	⚠ 1-533-593-31	LINK, IC	
		<TRANSISTOR>	
Q501	8-729-119-80	TRANSISTOR 2SC2688-LK	
Q502	8-729-044-29	TRANSISTOR 2SD2539(LBSONY-1)	
Q503	8-729-119-76	TRANSISTOR 2SA1175-HFE	
Q504	8-729-823-81	TRANSISTOR 2SC4632LS-CB7	
Q505	8-729-038-83	TRANSISTOR 2SK2251-01-F19	
Q506	8-729-119-78	TRANSISTOR 2SC2785-HFE	
Q507	8-729-032-61	TRANSISTOR 2SC5022-02	
Q701	8-729-119-78	TRANSISTOR 2SC2785-HFE	
Q702	8-729-119-78	TRANSISTOR 2SC2785-HFE	
Q801	8-729-119-78	TRANSISTOR 2SC2785-HFE	
Q802	8-729-119-76	TRANSISTOR 2SA1175-HFE	
Q803	8-729-119-78	TRANSISTOR 2SC2785-HFE	
Q804	8-729-119-76	TRANSISTOR 2SA1175-HFE	
Q805	8-729-119-78	TRANSISTOR 2SC2785-HFE	
Q806	8-729-119-76	TRANSISTOR 2SA1175-HFE	
Q807	8-729-119-78	TRANSISTOR 2SC2785-HFE (41 inch)	
Q808	8-729-030-02	TRANSISTOR DTC144ESA	
Q809	8-729-119-78	TRANSISTOR 2SC2785-HFE	
Q810	8-729-119-78	TRANSISTOR 2SC2785-HFE	
Q811	8-729-119-78	TRANSISTOR 2SC2785-HFE	
Q812	8-729-119-76	TRANSISTOR 2SA1175-HFE	

REF. NO.	PART NO.	DESCRIPTION			REMARK
		<RESISTOR>			
⋈R1	⚠	METAL		1%	1/4W
R501	1-249-421-11	CARBON	2.2K	5%	1/4W
R502	1-216-441-21	METAL OXIDE	27K	5%	1W F
R503	1-247-843-11	CARBON	3.3K	5%	1/4W
R504	1-249-419-11	CARBON	1.5K	5%	1/4W
R505	1-247-885-00	CARBON	180K	5%	1/4W
R506	1-247-883-00	CARBON	150K	5%	1/4W
R507	1-249-422-11	CARBON	2.7K	5%	1/4W
R508	1-260-338-51	CARBON	6.8K	5%	1/2W
R509	1-249-437-11	CARBON	47K	5%	1/4W
R510	1-215-918-00	METAL OXIDE	1.5K	5%	3W F
R511	1-215-918-00	METAL OXIDE	1.5K	5%	3W F
R512	1-215-918-00	METAL OXIDE	1.5K	5%	3W F
R513	1-247-843-11	CARBON	3.3K	5%	1/4W
R514	1-215-443-00	METAL	8.2K	1%	1/4W
R516	1-215-473-00	METAL	150K	1%	1/4W
R517	1-215-449-00	METAL	15K	1%	1/4W
R518	1-249-436-11	CARBON	39K	5%	1/4W
R519	1-249-429-11	CARBON	10K	5%	1/4W
R522	1-249-428-11	CARBON	8.2K	5%	1/4W
R523	1-249-437-11	CARBON	47K	5%	1/4W
R524	1-249-425-11	CARBON	4.7K	5%	1/4W
R525	1-249-405-11	CARBON	100	5%	1/4W F
R527	1-249-425-11	CARBON	4.7K	5%	1/4W
R528	1-215-910-00	METAL OXIDE	68	5%	3W F
R529	1-215-449-00	METAL	15K	1%	1/4W
R530	1-249-429-11	CARBON	10K	5%	1/4W
R531	1-260-326-11	CARBON	680	5%	1/2W
R532	1-260-315-71	CARBON	82	5%	1/2W
R533	1-214-912-00	METAL	91K	1%	1/2W
R534	1-215-479-00	METAL	270K	1%	1/4W
R535	1-247-887-00	CARBON	220K	5%	1/4W
R536	1-249-377-11	CARBON	0.47	5%	1/4W F
R537	1-260-336-11	CARBON	4.7K	5%	1/2W
R538	1-249-425-11	CARBON	4.7K	5%	1/4W
R539	1-249-377-11	CARBON	0.47	5%	1/4W F
R540	1-249-379-11	CARBON	0.68	5%	1/4W F
R541	1-247-807-31	CARBON	100	5%	1/4W
R542	1-215-864-00	METAL OXIDE	150	5%	1W F
R543	1-216-349-00	METAL OXIDE	1	5%	1W F
R544	1-215-864-00	METAL OXIDE	150	5%	1W F
R545	1-249-377-11	CARBON	0.47	5%	1/4W F
R546	1-249-377-11	CARBON	0.47	5%	1/4W F
R547	1-247-807-31	CARBON	100	5%	1/4W
R548	1-249-413-11	CARBON	470	5%	1/4W
R549	1-249-429-11	CARBON	10K	5%	1/4W (48/53 inch)
R549	1-249-431-11	CARBON	15K	5%	1/4W (41 inch)
R550	1-247-807-31	CARBON	100	5%	1/4W
R551	1-249-437-11	CARBON	47K	5%	1/4W
R552	1-247-807-31	CARBON	100	5%	1/4W
R553	1-247-881-00	CARBON	120K	5%	1/4W
R554	1-249-405-11	CARBON	100	5%	1/4W F
R555	1-247-807-31	CARBON	100	5%	1/4W
R556	1-260-099-11	CARBON	1K	5%	1/2W
R557	1-216-490-11	METAL OXIDE	39K	5%	3W F
R558	1-216-490-11	METAL OXIDE	39K	5%	3W F
R559	1-216-490-11	METAL OXIDE	39K	5%	3W F
R560	8-719-991-33	DIODE 1SS133T-77			
R562	1-202-838-00	SOLID	100K	10%	1/2W
R563	1-215-447-00	METAL	12K	1%	1/4W
R565	1-247-807-31	CARBON	100	5%	1/4W
R566	1-249-377-11	CARBON	0.47	5%	1/4W F
R567	1-249-377-11	CARBON	0.47	5%	1/4W F
R568	1-247-903-00	CARBON	1M	5%	1/4W
R569	1-216-392-11	METAL OXIDE	1.8	5%	3W F

REF. NO.	PART NO.	DESCRIPTION			REMARK
R570	1-215-910-00	METAL OXIDE	68	5%	3W F
R571	1-249-422-11	CARBON	2.7K	5%	1/4W
R572	1-247-895-91	CARBON	470K	5%	1/4W
R573	1-249-438-11	CARBON	56K	5%	1/4W
R574	1-249-435-11	CARBON	33K	5%	1/4W
R576	1-247-807-31	CARBON	100	5%	1/4W
R577	1-249-422-11	CARBON	2.7K	5%	1/4W
R578	1-215-473-00	METAL	150K	1%	1/4W (41 inch)
R579	1-247-889-00	CARBON	270K	5%	1/4W
R580	1-249-437-11	CARBON	47K	5%	1/4W
R581	1-249-437-11	CARBON	47K	5%	1/4W
R583	1-249-428-11	CARBON	8.2K	5%	1/4W
R584	1-249-429-11	CARBON	10K	5%	1/4W
R585	1-216-490-11	METAL OXIDE	39K	5%	3W F
R586	1-215-892-11	METAL OXIDE	1K	5%	2W F
R588	1-247-863-91	CARBON	22K	5%	1/4W
R589	1-247-887-00	CARBON	220K	5%	1/4W
R591	1-249-425-11	CARBON	4.7K	5%	1/4W
R595	1-215-464-00	METAL	62K	1%	1/4W (41 inch)
R596	1-215-473-00	METAL	150K	1%	1/4W (41 inch)
R597	1-215-464-00	METAL	62K	1%	1/4W (41 inch)
R701	1-215-449-00	METAL	15K	1%	1/4W
R702	1-249-421-11	CARBON	2.2K	5%	1/4W
R703	1-249-421-11	CARBON	2.2K	5%	1/4W
R704	1-215-457-00	METAL	33K	1%	1/4W
R705	1-215-457-00	METAL	33K	1%	1/4W
R706	1-215-457-00	METAL	33K	1%	1/4W
R801	1-247-807-31	CARBON	100	5%	1/4W
R802	1-247-807-31	CARBON	100	5%	1/4W
R803	1-249-430-11	CARBON	12K	5%	1/4W
R804	1-249-425-11	CARBON	4.7K	5%	1/4W
R805	1-247-807-31	CARBON	100	5%	1/4W
R806	1-249-429-11	CARBON	10K	5%	1/4W
R807	1-247-807-31	CARBON	100	5%	1/4W
R808	1-249-429-11	CARBON	10K	5%	1/4W
R809	1-249-425-11	CARBON	4.7K	5%	1/4W
R810	1-247-807-31	CARBON	100	5%	1/4W
R811	1-247-807-31	CARBON	100	5%	1/4W
R813	1-247-863-91	CARBON	22K	5%	1/4W
R814	1-247-807-31	CARBON	100	5%	1/4W
R815	1-247-807-31	CARBON	100	5%	1/4W
R816	1-247-807-31	CARBON	100	5%	1/4W
R817	1-247-807-31	CARBON	100	5%	1/4W
R818	1-249-429-11	CARBON	10K	5%	1/4W
R819	1-247-807-31	CARBON	100	5%	1/4W
R820	1-249-437-11	CARBON	47K	5%	1/4W
R821	1-249-431-11	CARBON	15K	5%	1/4W
R822	1-249-417-11	CARBON	1K	5%	1/4W
R823	1-249-417-11	CARBON	1K	5%	1/4W
R824	1-215-462-00	METAL	51K	1%	1/4W
R825	1-249-441-11	CARBON	100K	5%	1/4W
R826	1-215-462-00	METAL	51K	1%	1/4W
R827	1-216-474-11	METAL OXIDE	82	5%	3W F
R828	1-249-426-11	CARBON	5.6K	5%	1/4W
R829	1-249-426-11	CARBON	5.6K	5%	1/4W
R830	1-249-414-11	CARBON	560	5%	1/4W
R831	1-249-414-11	CARBON	560	5%	1/4W
R832	1-249-441-11	CARBON	100K	5%	1/4W
R833	1-216-474-11	METAL OXIDE	82	5%	3W F
R834	1-249-441-11	CARBON	100K	5%	1/4W
R835	1-249-441-11	CARBON	100K	5%	1/4W
R836	1-247-807-31	CARBON	100	5%	1/4W
R837	1-249-441-11	CARBON	100K	5%	1/4W
R838	1-249-421-11	CARBON	2.2K	5%	1/4W
R839	1-247-807-31	CARBON	100	5%	1/4W

REF. NO.	PART NO.	DESCRIPTION			REMARK
R841	1-247-815-91	CARBON	220	5%	1/4W
R842	1-247-807-31	CARBON	100	5%	1/4W
R843	1-247-807-31	CARBON	100	5%	1/4W
R844	1-247-807-31	CARBON	100	5%	1/4W
R845	1-249-441-11	CARBON	100K	5%	1/4W
R846	1-247-807-31	CARBON	100	5%	1/4W
R847	1-215-481-00	METAL	330K	1%	1/4W
R848	1-215-449-00	METAL	15K	1%	1/4W
R850	1-215-481-00	METAL	330K	1%	1/4W
R851	1-247-807-31	CARBON	100	5%	1/4W
R852	1-247-807-31	CARBON	100	5%	1/4W
R853	1-247-887-00	CARBON	220K	5%	1/4W
R854	1-249-429-11	CARBON	10K	5%	1/4W
R856	1-247-807-31	CARBON	100	5%	1/4W
R857	1-247-807-31	CARBON	100	5%	1/4W
R858	1-215-455-00	METAL	27K	1%	1/4W
R859	1-215-455-00	METAL	27K	1%	1/4W
R860	1-215-455-00	METAL	27K	1%	1/4W
R861	1-215-455-00	METAL	27K	1%	1/4W
R862	1-215-455-00	METAL	27K	1%	1/4W
R863	1-215-455-00	METAL	27K	1%	1/4W
R865	1-249-424-11	CARBON	3.9K	5%	1/4W
R866	1-249-437-11	CARBON	47K	5%	1/4W (41 inch)
R867	1-215-455-00	METAL	27K	1%	1/4W
R868	1-215-443-00	METAL	8.2K	1%	1/4W
R869	1-249-425-11	CARBON	4.7K	5%	1/4W
R870	1-249-437-11	CARBON	47K	5%	1/4W (41 inch)
R871	1-249-417-11	CARBON	1K	5%	1/4W
R872	1-249-425-11	CARBON	4.7K	5%	1/4W
R873	1-247-807-31	CARBON	100	5%	1/4W
R874	1-249-435-11	CARBON	33K	5%	1/4W
R875	1-249-441-11	CARBON	100K	5%	1/4W
R877	1-249-422-11	CARBON	2.7K	5%	1/4W (41 inch)
R878	1-215-469-00	METAL	100K	1%	1/4W (41 inch)
R879	1-215-445-00	METAL	10K	1%	1/4W
R881	1-249-408-11	CARBON	180	5%	1/4W
R882	1-249-429-11	CARBON	10K	5%	1/4W
R883	1-249-429-11	CARBON	10K	5%	1/4W
R884	1-215-445-00	METAL	10K	1%	1/4W
R885	1-249-441-11	CARBON	100K	5%	1/4W
R886	1-249-428-11	CARBON	8.2K	5%	1/4W
R887	1-247-807-31	CARBON	100	5%	1/4W
R888	1-247-807-31	CARBON	100	5%	1/4W
R889	1-249-439-11	CARBON	68K	5%	1/4W
R890	1-249-441-11	CARBON	100K	5%	1/4W
R891	1-247-843-11	CARBON	3.3K	5%	1/4W
R892	1-249-425-11	CARBON	4.7K	5%	1/4W (41 inch)
R893	1-249-421-11	CARBON	2.2K	5%	1/4W (41 inch)
R894	1-215-455-00	METAL	27K	1%	1/4W
R895	1-249-421-11	CARBON	2.2K	5%	1/4W
R896	1-249-441-11	CARBON	100K	5%	1/4W
R897	1-247-807-31	CARBON	100	5%	1/4W
R898	1-247-815-91	CARBON	220	5%	1/4W
R900	1-216-474-11	METAL OXIDE	82	5%	3W F
R901	1-215-449-00	METAL	15K	1%	1/4W
R902	1-215-449-00	METAL	15K	1%	1/4W
R903	1-215-421-00	METAL	1K	1%	1/4W
R904	1-214-800-11	METAL	2.2	1%	1/2W
R905	1-214-800-11	METAL	2.2	1%	1/2W
R906	1-214-800-11	METAL	2.2	1%	1/2W
R908	1-215-445-00	METAL	10K	1%	1/4W
R909	1-215-421-00	METAL	1K	1%	1/4W
R910	1-215-421-00	METAL	1K	1%	1/4W

The components identified by shading and mark ⚠ are critical for safety.
Replace only with part number specified.

E H1

REF. NO.	PART NO.	DESCRIPTION			REMARK
R911	1-215-461-00	METAL	47K	1%	1/4W
R912	1-215-445-00	METAL	10K	1%	1/4W
R913	1-215-455-00	METAL	27K	1%	1/4W
R914	1-215-455-00	METAL	27K	1%	1/4W
R915	1-215-455-00	METAL	27K	1%	1/4W
R916	1-215-455-00	METAL	27K	1%	1/4W
R917	1-215-455-00	METAL	27K	1%	1/4W
R918	1-215-455-00	METAL	27K	1%	1/4W
R919	1-249-435-11	CARBON	33K	5%	1/4W
R920	1-214-800-11	METAL	2.2	1%	1/2W
R921	1-249-429-11	CARBON	10K	5%	1/4W
R922	1-215-445-00	METAL	10K	1%	1/4W
R923	1-249-425-11	CARBON	4.7K	5%	1/4W
R924	1-215-445-00	METAL	10K	1%	1/4W
R925	1-249-425-11	CARBON	4.7K	5%	1/4W
R926	1-249-408-11	CARBON	180	5%	1/4W
R927	1-249-429-11	CARBON	10K	5%	1/4W
R928	1-249-429-11	CARBON	10K	5%	1/4W
R929	1-214-800-11	METAL	2.2	1%	1/2W
R930	1-214-800-11	METAL	2.2	1%	1/2W
R931	1-215-445-00	METAL	10K	1%	1/4W
R933	1-215-445-00	METAL	10K	1%	1/4W
R934	1-249-422-11	CARBON	2.7K	5%	1/4W
R935	1-249-429-11	CARBON	10K	5%	1/4W
R936	1-249-429-11	CARBON	10K	5%	1/4W
R937	1-249-436-11	CARBON	39K	5%	1/4W
R938	1-215-421-00	METAL	1K	1%	1/4W
R939	1-259-878-11	CARBON	1.5M	5%	1/4W
R940	1-249-441-11	CARBON	100K	5%	1/4W
R941	1-249-441-11	CARBON	100K	5%	1/4W
R942	1-249-421-11	CARBON	2.2K	5%	1/4W
R943	1-249-441-11	CARBON	100K	5%	1/4W
R944	1-215-421-00	METAL	1K	1%	1/4W
R945	1-249-437-11	CARBON	47K	5%	1/4W (48/53 inch)
R945	1-249-439-11	CARBON	68K	5%	1/4W (41 inch)
R946	1-215-421-00	METAL	1K	1%	1/4W
R947	1-249-441-11	CARBON	100K	5%	1/4W
R948	1-247-815-91	CARBON	220	5%	1/4W
R949	1-247-807-31	CARBON	100	5%	1/4W
R950	1-247-807-31	CARBON	100	5%	1/4W
R951	1-247-807-31	CARBON	100	5%	1/4W
R952	1-247-807-31	CARBON	100	5%	1/4W
R953	1-249-435-11	CARBON	33K	5%	1/4W
R954	1-215-433-00	METAL	3.3K	1%	1/4W
R955	1-215-433-00	METAL	3.3K	1%	1/4W
R956	1-249-429-11	CARBON	10K	5%	1/4W
R957	1-214-800-11	METAL	2.2	1%	1/2W
R958	1-214-800-11	METAL	2.2	1%	1/2W
R959	1-215-433-00	METAL	3.3K	1%	1/4W
R961	1-249-425-11	CARBON	4.7K	5%	1/4W
R962	1-214-800-11	METAL	2.2	1%	1/2W
R963	1-214-800-11	METAL	2.2	1%	1/2W
R964	1-215-433-00	METAL	3.3K	1%	1/4W
R965	1-215-433-00	METAL	3.3K	1%	1/4W
R966	1-247-815-91	CARBON	220	5%	1/4W
R967	1-215-455-00	METAL	27K	1%	1/4W
R968	1-215-455-00	METAL	27K	1%	1/4W
R969	1-215-455-00	METAL	27K	1%	1/4W
R970	1-215-455-00	METAL	27K	1%	1/4W
R971	1-215-455-00	METAL	27K	1%	1/4W
R972	1-215-455-00	METAL	27K	1%	1/4W
R973	1-214-800-11	METAL	2.2	1%	1/2W
R974	1-215-455-00	METAL	27K	1%	1/4W
R975	1-214-800-11	METAL	2.2	1%	1/2W
R976	1-215-433-00	METAL	3.3K	1%	1/4W
R978	1-215-443-00	METAL	8.2K	1%	1/4W
R979	1-249-425-11	CARBON	4.7K	5%	1/4W
R980	1-247-815-91	CARBON	220	5%	1/4W
R981	1-247-815-91	CARBON	220	5%	1/4W
R982	1-215-469-00	METAL	100K	1%	1/4W
R983	1-247-815-91	CARBON	220	5%	1/4W
R984	1-215-445-00	METAL	10K	1%	1/4W
R985	1-249-429-11	CARBON	10K	5%	1/4W
R986	1-215-449-00	METAL	15K	1%	1/4W
R987	1-249-408-11	CARBON	180	5%	1/4W
R988	1-249-429-11	CARBON	10K	5%	1/4W
R989	1-249-425-11	CARBON	4.7K	5%	1/4W
R990	1-249-431-11	CARBON	15K	5%	1/4W
R991	1-249-429-11	CARBON	10K	5%	1/4W
R993	1-249-425-11	CARBON	4.7K	5%	1/4W
R994	1-216-474-11	METAL OXIDE	82	5%	3W F
R997	1-215-445-00	METAL	10K	1%	1/4W
R998	1-249-425-11	CARBON	4.7K	5%	1/4W
R999	1-249-425-11	CARBON	4.7K	5%	1/4W
R1901	1-249-439-11	CARBON	68K	5%	1/4W
R1904	1-249-425-11	CARBON	4.7K	5%	1/4W
		<SPARK GAP>			
SG501	1-519-422-11	GAP, SPARK			
		<TRANSFORMER>			
T501	1-437-195-11	TRANSFORMER, HORIZONTAL DRIVE			
T502	⚠ 1-431-211-11	TRANSFORMER, FERRITE (PMT)			
T504	⚠ 1-457-307-11	FBT ASSY, NX-4007//M3T4			
**********					
	* A-1372-518-A	H1 MOUNT **********			
		<CAPACITOR>			
C3003	1-126-157-11	ELECT	10MF	20%	16V
		<CONNECTOR>			
CN3001	* 1-564-519-11	PLUG, CONNECTOR 4P			
CN3002	* 1-564-525-11	PLUG, CONNECTOR 10P			
CN3003	* 1-580-690-11	PIN, CONNECTOR (PC BOARD) 4P			
CN3004	* 1-691-292-11	PIN, CONNECTOR (PC BOARD) 3P			
		<DIODE>			
D3002	8-719-992-06	DIODE SLA-580LT3F			
		<IC>			
IC3002	8-742-014-11	HYB IC SBX1981-51			
		<TRANSISTOR>			
Q3002	8-729-120-28	TRANSISTOR 2SC1623-L5L6			
		<RESISTOR>			
R3001	1-216-683-11	METAL CHIP	22K	0.50%	1/10W
R3002	1-216-675-11	METAL CHIP	10K	0.50%	1/10W
R3006	1-216-667-11	METAL CHIP	4.7K	0.50%	1/10W
R3007	1-216-661-11	METAL CHIP	2.7K	0.50%	1/10W
R3009	1-216-041-00	RES,CHIP	470	5%	1/10W

The components identified by shading and mark ⚠ are critical for safety.
Replace only with part number specified.

REF. NO.	PART NO.	DESCRIPTION			REMARK
R3010	1-216-045-00	RES,CHIP	680	5%	1/10W
		<SWITCH>			
S3001	1-571-532-21	SWITCH, TACTIL (PROG +)			
S3002	1-571-532-21	SWITCH, TACTIL (PROG -)			
S3003	1-571-532-21	SWITCH, TACTIL (VOL +)			
S3004	1-571-532-21	SWITCH, TACTIL (VOL -)			
S3005	1-571-532-21	SWITCH, TACTIL (TV/VIDEO)			
S3006	⚠ 1-571-433-31	SWITCH, PUSH (AC POWER)			
**********					
	* A-1373-691-A	UG MOUNT **********			
		<CAPACITOR>			
C2901	1-126-933-11	ELECT	100MF	20%	16V
C2902	1-126-964-11	ELECT	10MF	20%	50V
C2903	1-126-964-11	ELECT	10MF	20%	50V
C2904	1-163-133-00	CERAMIC CHIP	470PF	5%	50V
C2905	1-126-964-11	ELECT	10MF	20%	50V
C2906	1-163-133-00	CERAMIC CHIP	470PF	5%	50V
C2907	1-126-964-11	ELECT	10MF	20%	50V
		<CONNECTOR>			
CN2901	* 1-564-521-11	PLUG, CONNECTOR 6P			
CN2902	* 1-564-519-11	PLUG, CONNECTOR 4P			
		<DIODE>			
D2901	8-719-977-22	DIODE DTZ9.1			
D2902	8-719-977-22	DIODE DTZ9.1			
D2903	8-719-977-22	DIODE DTZ9.1			
D2904	8-719-977-22	DIODE DTZ9.1			
D2905	8-719-977-22	DIODE DTZ9.1			
		<JACK>			
J2901	1-784-654-11	JACK BLOCK, PIN (DVD IN)			
		<RESISTOR>			
R2901	1-216-022-00	RES,CHIP	75	5%	1/10W
R2902	1-216-033-00	RES,CHIP	220	5%	1/10W
R2903	1-216-022-00	RES,CHIP	75	5%	1/10W
R2904	1-216-033-00	RES,CHIP	220	5%	1/10W
R2905	1-216-022-00	RES,CHIP	75	5%	1/10W
R2906	1-216-033-00	RES,CHIP	220	5%	1/10W
R2907	1-216-113-00	RES,CHIP	470K	5%	1/10W
R2908	1-216-113-00	RES,CHIP	470K	5%	1/10W
**********					
	* A-1375-177-A	H2 COMPL **********			
		<CAPACITOR>			
C3203	1-126-157-11	ELECT	10MF	20%	16V
C3204	1-163-037-11	CERAMIC CHIP	0.022MF	10%	50V
C3205	1-163-037-11	CERAMIC CHIP	0.022MF	10%	50V
		<CONNECTOR>			
CN3201	* 1-564-519-11	PLUG, CONNECTOR 4P			
CN3202	* 1-564-526-31	PLUG, CONNECTOR 11P			
CN3204	* 1-564-520-11	PLUG, CONNECTOR 5P			
		<JACK>			
J3201	1-784-658-11	TERMINAL BLOCK, S (S-VIDEO IN)			
J3202	1-507-806-00	JACK 1P (HEAD PHONE)			
		<COIL>			
L3201	1-408-615-31	INDUCTOR 100UH			
L3202	1-408-615-31	INDUCTOR 100UH			
		<TRANSISTOR>			
Q3201	8-729-120-28	TRANSISTOR 2SC1623-L5L6			
		<RESISTOR>			
R3201	1-216-667-11	METAL CHIP	4.7K	0.50%	1/10W
R3202	1-216-025-00	RES,CHIP	100	5%	1/10W
R3203	1-216-025-00	RES,CHIP	100	5%	1/10W
R3204	1-216-661-11	METAL CHIP	2.7K	0.50%	1/10W
R3205	1-216-654-11	METAL CHIP	1.3K	0.50%	1/10W
R3206	1-216-675-11	METAL CHIP	10K	0.50%	1/10W
R3207	1-216-654-11	METAL CHIP	1.3K	0.50%	1/10W
R3208	1-216-073-00	RES,CHIP	10K	5%	1/10W
R3209	1-216-033-00	RES,CHIP	220	5%	1/10W
R3210	1-216-033-00	RES,CHIP	220	5%	1/10W
R3211	1-216-033-00	RES,CHIP	220	5%	1/10W
R3212	1-216-033-00	RES,CHIP	220	5%	1/10W
		<SWITCH>			
S3201	1-571-532-21	SWITCH, TACTIL (MENU)			
S3202	1-571-532-21	SWITCH, TACTIL (MENU +)			
S3203	1-571-532-21	SWITCH, TACTIL (MENU -)			
S3204	1-571-532-21	SWITCH, TACTIL (ENTER)			
S3205	1-571-532-21	SWITCH, TACTIL (AUTO CONVER)			
S3206	1-571-532-21	SWITCH, TACTIL (AUTO PROGR)			
**********					
	* A-1390-876-A	ZR MOUNT **********			
		<CONNECTOR>			
CN1401	* 1-564-510-11	PLUG, CONNECTOR 7P			
CN1403	* 1-564-506-11	PLUG, CONNECTOR 3P			
CN1404	* 1-564-507-11	PLUG, CONNECTOR 4P			
CN1405	* 1-580-689-11	PIN, CONNECTOR (PC BOARD) 4P			
		<CONNECTOR>			
DY1401	⚠ 1-451-455-51	DEFLECTION YOKE (R)			
		<RESISTOR>			
R1401	1-249-414-11	CARBON	560	5%	1/4W
R1402	1-249-414-11	CARBON	560	5%	1/4W
R1403	1-216-476-11	METAL OXIDE	180	5%	3W F
R1415	1-216-475-11	METAL OXIDE	120	5%	3W F
R1418	1-216-475-11	METAL OXIDE	120	5%	3W F

The components identified by shading and mark ⚠ are critical for safety.
Replace only with part number specified.

ZG S

REF. NO.	PART NO.	DESCRIPTION				REMARK
**********						
	* A-1390-877-A	ZG MOUNT				
		**********				
	4-382-854-11	SCREW (M3X10), P, SW (+)				
		<CAPACITOR>				
C1433	1-104-999-11	MYLAR	0.1MF	10%	200V	
C1434	1-107-362-11	FILM	0.0047MF	10%	200V	
C1435	1-107-667-11	ELECT	2.2MF	20%	160V	
C1436	1-130-471-00	FILM	0.001MF	5%	50V	
C1437	1-130-471-00	FILM	0.001MF	5%	50V	
C1438	1-107-362-11	FILM	0.0047MF	10%	200V	
C1439	1-161-830-00	CERAMIC	0.0047MF		500V	
C1440	1-104-664-11	ELECT	47MF	20%	25V	
C1441	1-104-999-11	MYLAR	0.1MF	10%	200V	
C1443	1-126-935-11	ELECT	470MF	20%	16V	
C1444	1-107-639-11	ELECT	47MF	20%	160V	
C1445	1-126-933-11	ELECT	100MF	20%	16V	
C1446	1-126-933-11	ELECT	100MF	20%	16V	
C1450	1-130-471-00	FILM	0.001MF	5%	50V	
		<CONNECTOR>				
CN1431	* 1-564-508-11	PLUG, CONNECTOR 5P				
CN1432	* 1-564-510-11	PLUG, CONNECTOR 7P				
CN1433	* 1-564-507-11	PLUG, CONNECTOR 4P				
CN1434	* 1-580-689-11	PIN, CONNECTOR (PC BOARD) 4P				
CN1436	1-695-915-11	TAB (CONTACT)				
CN1461	* 1-564-506-11	PLUG, CONNECTOR 3P				
CN1462	* 1-564-507-11	PLUG, CONNECTOR 4P				
CN1464	* 1-564-507-11	PLUG, CONNECTOR 4P				
		<DIODE>				
D1431	⚠ 8-719-110-88	DIODE RD39ESB2 (G)				
D1432	8-719-110-88	DIODE RD39ESB2				
D1433	8-719-991-33	DIODE 1SS133T-77				
		<CONNECTOR>				
DY1431	⚠ 1-451-455-51	DEFLECTION YOKE (G)				
		<COIL>				
L1431	1-410-478-11	INDUCTOR 47UH				
		<TRANSISTOR>				
Q1431	8-729-017-06	TRANSISTOR 2SC4793				
Q1432	8-729-017-05	TRANSISTOR 2SA1837				
Q1433	8-729-119-76	TRANSISTOR 2SA1175-HFE				
Q1434	8-729-119-78	TRANSISTOR 2SC2785-HFE				
Q1435	8-729-119-78	TRANSISTOR 2SC2785-HFE				
Q1436	8-729-119-78	TRANSISTOR 2SC2785-HFE				
		<RESISTOR>				
R1431	1-249-414-11	CARBON	560	5%	1/4W	
R1432	1-249-414-11	CARBON	560	5%	1/4W	
R1433	1-249-377-11	CARBON	0.47	5%	1/4W	F
R1435	1-216-475-11	METAL OXIDE	120	5%	3W	F
R1436	1-216-475-11	METAL OXIDE	120	5%	3W	F
R1437	1-249-414-11	CARBON	560	5%	1/4W	
R1438	1-215-451-00	METAL	18K	1%	1/4W	
R1439	1-215-451-00	METAL	18K	1%	1/4W	
R1440	1-249-414-11	CARBON	560	5%	1/4W	F
R1441	1-247-815-91	CARBON	220	5%	1/4W	
R1442	1-247-815-91	CARBON	220	5%	1/4W	
R1443	1-249-377-11	CARBON	0.47	5%	1/4W	F
R1444	1-247-815-91	CARBON	220	5%	1/4W	
R1445	1-249-403-11	CARBON	68	5%	1/4W	
R1448	1-249-417-11	CARBON	1K	5%	1/4W	
R1449	1-249-403-11	CARBON	68	5%	1/4W	
R1450	1-249-417-11	CARBON	1K	5%	1/4W	
R1451	1-247-815-91	CARBON	220	5%	1/4W	
R1452	1-249-417-11	CARBON	1K	5%	1/4W	
R1453	1-249-401-11	CARBON	47	5%	1/4W	
R1454	1-260-311-11	CARBON	39	5%	1/2W	
R1455	1-249-384-11	CARBON	1.8	5%	1/4W	F
R1456	1-216-476-11	METAL OXIDE	180	5%	3W	F
R1457	1-249-417-11	CARBON	1K	5%	1/4W	F
R1458	1-249-384-11	CARBON	1.8	5%	1/4W	F
R1459	1-249-400-11	CARBON	39	5%	1/4W	F
R1461	1-249-414-11	CARBON	560	5%	1/4W	
R1462	1-249-414-11	CARBON	560	5%	1/4W	
R1465	1-216-475-11	METAL OXIDE	120	5%	3W	F
R1468	1-216-475-11	METAL OXIDE	120	5%	3W	F
**********						
	* A-1390-891-A	S MOUNT				
		**********				
		<CAPACITOR>				
C2201	1-104-664-11	ELECT	47MF	20%	16V	
C2224	1-126-933-11	ELECT	100MF	20%	16V	
C2227	1-163-129-00	CERAMIC CHIP	330PF	5%	50V	
C2228	1-126-959-11	ELECT	0.47MF	20%	50V	
C2229	1-163-017-00	CERAMIC CHIP	0.0047MF	10%	50V	
C2230	1-163-989-11	CERAMIC CHIP	0.033MF	10%	25V	
C2231	1-164-182-11	CERAMIC CHIP	0.0033MF	10%	50V	
C2232	1-164-222-11	CERAMIC CHIP	0.22MF		25V	
C2233	1-164-222-11	CERAMIC CHIP	0.22MF		25V	
C2234	1-126-960-11	ELECT	1MF	20%	50V	
C2235	1-126-960-11	ELECT	1MF	20%	50V	
C2236	1-163-129-00	CERAMIC CHIP	330PF	5%	50V	
C2251	1-126-960-11	ELECT	1MF	20%	50V	
C2252	1-126-960-11	ELECT	1MF	20%	50V	
C2253	1-164-182-11	CERAMIC CHIP	0.0033MF	10%	50V	
C2254	1-163-989-11	CERAMIC CHIP	0.033MF	10%	25V	
C2255	1-126-964-11	ELECT	10MF	20%	50V	
C2256	1-163-038-00	CERAMIC CHIP	0.1MF		25V	
C2257	1-126-933-11	ELECT	100MF	20%	16V	
C2258	1-164-182-11	CERAMIC CHIP	0.0033MF	10%	50V	
C2259	1-163-989-11	CERAMIC CHIP	0.033MF	10%	25V	
C2260	1-126-960-11	ELECT	1MF	20%	50V	
C2261	1-163-038-00	CERAMIC CHIP	0.1MF		25V	
C2262	1-163-038-00	CERAMIC CHIP	0.1MF		25V	
C2263	1-163-038-00	CERAMIC CHIP	0.1MF		25V	
C2264	1-126-960-11	ELECT	1MF	20%	50V	
		<CONNECTOR>				
CN2201	* 1-770-748-11	CONNECTOR, BOARD TO BOARD 12P				
		<IC>				
IC2201	8-752-058-68	IC CXA1315M				
IC2202	8-759-009-06	IC MC14052BF				
IC2203	8-759-100-96	IC uPC4558G2				

S

The components identified by shading and mark ⚠ are critical for safety.
Replace only with part number specified.

REF. NO.	PART NO.	DESCRIPTION			REMARK
IC2204	8-759-100-96	IC uPC4558G2			
IC2205	8-759-100-96	IC uPC4558G2			
IC2206	8-759-100-96	IC uPC4558G2			
IC2207	8-759-100-96	IC uPC4558G2			
IC2208	8-759-496-02	IC NJM2150D			
IC2211	8-759-009-06	IC MC14052BF			
		<TRANSISTOR>			
Q4	1-801-806-11	TRANSISTOR DTC144EKA-T146			
		<RESISTOR>			
R2201	1-216-073-00	RES,CHIP	10K	5%	1/10W
R2202	1-216-073-00	RES,CHIP	10K	5%	1/10W
R2203	1-216-073-00	RES,CHIP	10K	5%	1/10W
R2204	1-216-025-00	RES,CHIP	100	5%	1/10W
R2205	1-216-025-00	RES,CHIP	100	5%	1/10W
R2206	1-216-073-00	RES,CHIP	10K	5%	1/10W
R2207	1-216-049-00	RES,CHIP	1K	5%	1/10W
R2208	1-216-061-00	RES,CHIP	3.3K	5%	1/10W
R2209	1-216-081-00	RES,CHIP	22K	5%	1/10W
R2210	1-216-081-00	RES,CHIP	22K	5%	1/10W
R2211	1-216-065-00	RES,CHIP	4.7K	5%	1/10W
R2212	1-216-065-00	RES,CHIP	4.7K	5%	1/10W
R2213	1-216-081-00	RES,CHIP	22K	5%	1/10W
R2214	1-216-081-00	RES,CHIP	22K	5%	1/10W
R2216	1-216-073-00	RES,CHIP	10K	5%	1/10W
R2217	1-216-073-00	RES,CHIP	10K	5%	1/10W
R2218	1-216-083-00	RES,CHIP	27K	5%	1/10W
R2219	1-216-049-00	RES,CHIP	1K	5%	1/10W
R2222	1-216-081-00	RES,CHIP	22K	5%	1/10W
R2223	1-216-083-00	RES,CHIP	27K	5%	1/10W
R2224	1-216-085-00	RES,CHIP	33K	5%	1/10W
R2225	1-216-085-00	RES,CHIP	33K	5%	1/10W
R2226	1-216-295-00	SHORT	0		
R2227	1-216-049-00	RES,CHIP	1K	5%	1/10W
R2228	1-216-089-00	RES,CHIP	47K	5%	1/10W
R2230	1-216-075-00	RES,CHIP	12K	5%	1/10W
R2231	1-216-099-00	RES,CHIP	120K	5%	1/10W
R2232	1-216-097-00	RES,CHIP	100K	5%	1/10W
R2233	1-216-089-00	RES,CHIP	47K	5%	1/10W
R2234	1-216-081-00	RES,CHIP	22K	5%	1/10W
R2235	1-216-097-00	RES,CHIP	100K	5%	1/10W
R2236	1-216-081-00	RES,CHIP	22K	5%	1/10W
R2237	1-216-053-00	RES,CHIP	1.5K	5%	1/10W
R2238	1-216-081-00	RES,CHIP	22K	5%	1/10W
R2239	1-216-081-00	RES,CHIP	22K	5%	1/10W
R2240	1-216-081-00	RES,CHIP	22K	5%	1/10W
R2241	1-216-081-00	RES,CHIP	22K	5%	1/10W
R2242	1-216-081-00	RES,CHIP	22K	5%	1/10W
R2243	1-216-081-00	RES,CHIP	22K	5%	1/10W
R2244	1-216-081-00	RES,CHIP	22K	5%	1/10W
R2245	1-216-073-00	RES,CHIP	10K	5%	1/10W
R2246	1-216-079-00	RES,CHIP	18K	5%	1/10W
R2247	1-216-073-00	RES,CHIP	10K	5%	1/10W
R2248	1-216-079-00	RES,CHIP	18K	5%	1/10W
R2249	1-216-073-00	RES,CHIP	10K	5%	1/10W
R2250	1-216-073-00	RES,CHIP	10K	5%	1/10W
R2251	1-216-073-00	RES,CHIP	10K	5%	1/10W
R2252	1-216-073-00	RES,CHIP	10K	5%	1/10W
R2253	1-216-065-00	RES,CHIP	4.7K	5%	1/10W
R2254	1-216-063-91	RES,CHIP	3.9K	5%	1/10W
R2255	1-216-097-00	RES,CHIP	100K	5%	1/10W
R2256	1-216-097-00	RES,CHIP	100K	5%	1/10W
R2257	1-216-081-00	RES,CHIP	22K	5%	1/10W
R2258	1-216-089-00	RES,CHIP	47K	5%	1/10W

REF. NO.	PART NO.	DESCRIPTION			REMARK
R2259	1-216-099-00	RES,CHIP	120K	5%	1/10W
R2260	1-216-089-00	RES,CHIP	47K	5%	1/10W
R2261	1-216-077-00	RES,CHIP	15K	5%	1/10W
R2262	1-216-085-00	RES,CHIP	33K	5%	1/10W
R2263	1-216-085-00	RES,CHIP	33K	5%	1/10W
R2264	1-216-083-00	RES,CHIP	27K	5%	1/10W
R2265	1-216-085-00	RES,CHIP	33K	5%	1/10W
R2266	1-216-295-00	SHORT	0		
R2267	1-216-049-00	RES,CHIP	1K	5%	1/10W
R2268	1-216-085-00	RES,CHIP	33K	5%	1/10W
R2269	1-216-071-00	RES,CHIP	8.2K	5%	1/10W
R2270	1-216-085-00	RES,CHIP	33K	5%	1/10W
R2271	1-216-071-00	RES,CHIP	8.2K	5%	1/10W
R2272	1-216-085-00	RES,CHIP	33K	5%	1/10W
R2274	1-216-049-00	RES,CHIP	1K	5%	1/10W
R2275	1-216-049-00	RES,CHIP	1K	5%	1/10W
R2276	1-216-049-00	RES,CHIP	1K	5%	1/10W
R2277	1-216-073-00	RES,CHIP	10K	5%	1/10W
R2281	1-216-049-00	RES,CHIP	1K	5%	1/10W
R2283	1-216-295-00	SHORT	0		
R2284	1-216-073-00	RES,CHIP	10K	5%	1/10W

****

MISCELLANEOUS
****

⚠	1-223-925-11	RESISTOR ASSY (HIGH-VOLTAGE)
⚠	1-251-372-21	BOOSTER, RF
⚠	1-451-455-61	DEFLECTION YOKE (B)
⚠	1-452-790-11	NECK ASSY
⚠	1-452-909-31	MAGNET ASSY, 4 POLE
	1-505-426-21	SPEAKER (10.6 CM) (41 inch)
	1-528-864-11	BATTERY, SOLAR
	1-529-404-11	SPEAKER (5CM) (48/53 inch)
	1-529-405-11	SPEAKER (16CM) (48/53 inch)
*	1-555-400-00	CABLE, PIN
⚠	1-574-062-61	CORD, POWER (WITH CONNECTOR) 2.5A/250V (GE/ME MODEL, AUS MODEL 53 inch)
⚠	1-574-358-51	CORD, POWER (WITH CONNECTOR) (AUS MODEL 41/48 inch)
⚠	1-769-609-21	CORD, POWER (WITH CONNECTOR) (HK MODEL)
⚠	8-598-955-12	BLOCK ASSY, HIGH-VOLTAGE
⚠	8-733-570-05	PICTURE TUBE 07MXC2(G)(DIAPHRAGM) (48/53 inch)
⚠	8-733-572-05	PICTURE TUBE 07MXC3(R)(DIAPHRAGM) (48/53 inch)
⚠	8-733-575-05	PICTURE TUBE 07MAC3(B)(DIAPHRAGM) (48/53 inch)
⚠	A-1501-259-A	PICTURE TUBE MECHASEAL ASSY (R), SLIM (41 inch)
⚠	A-1501-260-A	PICTURE TUBE MECHASEAL ASSY (G), SLIM (41 inch)
⚠	A-1501-261-A	PICTURE TUBE MECHASEAL ASSY (B), SLIM (41 inch)

****

The components identified by shading and mark ⚠ are critical for safety.
Replace only with part number specified.

REF. NO.	PART NO.	DESCRIPTION	REMARK
		ACCESSORIES AND PACKING MATERIALS	
		**********	
	⚠ 1-569-008-11	ADAPTOR, CONVERSION 2P (GE/ME MODEL)	
	3-861-923-31	MANUAL, INSTRUCTION (ENGLISH,FRENCH,ARABIC,CHINESE,PERUSSIAN)	
	* 4-029-168-01	BAG, PROTECTION (41 inch)	
	* 4-030-895-01	JOINT	
	* 4-041-423-11	SHEET, PROTECTION (41/48 inch)	
	* 4-055-672-01	BAG, PROTECTION (53 inch)	
	* 4-055-673-01	SHEET, PROTECTION (53 inch)	
	* 4-060-976-01	BAG, PROTECTION (48 inch)	
	* 4-065-646-01	CUSHION (UPPER) (ASSY) (41 inch)	
	* 4-065-647-01	CUSHION (LOWER) (ASSY) (41 inch)	
	* 4-065-652-01	BOARD, TOP (41 inch)	
	* 4-065-730-01	TRAY (41 inch)	
	* 4-069-898-01	INDIVIDUAL CARTON (48 inch)	
	* 4-069-899-01	TRAY (48 inch)	
	* 4-069-900-01	BOARD, TOP (48 inch)	
	* 4-069-901-01	BOARD, BOTTOM (48 inch)	
	* 4-069-902-01	CUSHION (UPPER) (ASSY) (48 inch)	
	* 4-069-903-01	CUSHION (LOWER) (ASSY) (48 inch)	
	* 4-069-987-01	CUSHION (UPPER) (ASSY) (53 inch)	
	* 4-069-988-01	CUSHION (LOWER) (ASSY) (53 inch)	
	* 4-069-993-01	INDIVIDUAL CARTON (53 inch)	
	* 4-069-994-01	TRAY (53 inch)	
	* 4-069-995-01	BOARD, TOP (53 inch)	
	* 4-069-996-01	BOARD, BOTTOM (53 inch)	
	* 4-070-211-01	INDIVIDUAL CARTON (41 inch)	
		REMOTE COMMANDER	
		**********	
	1-473-978-21	REMOTE COMMANDER (RM-871)	
	4-978-977-01	COVER, BATTERY (FOR RM-871)	

© 1999. 4