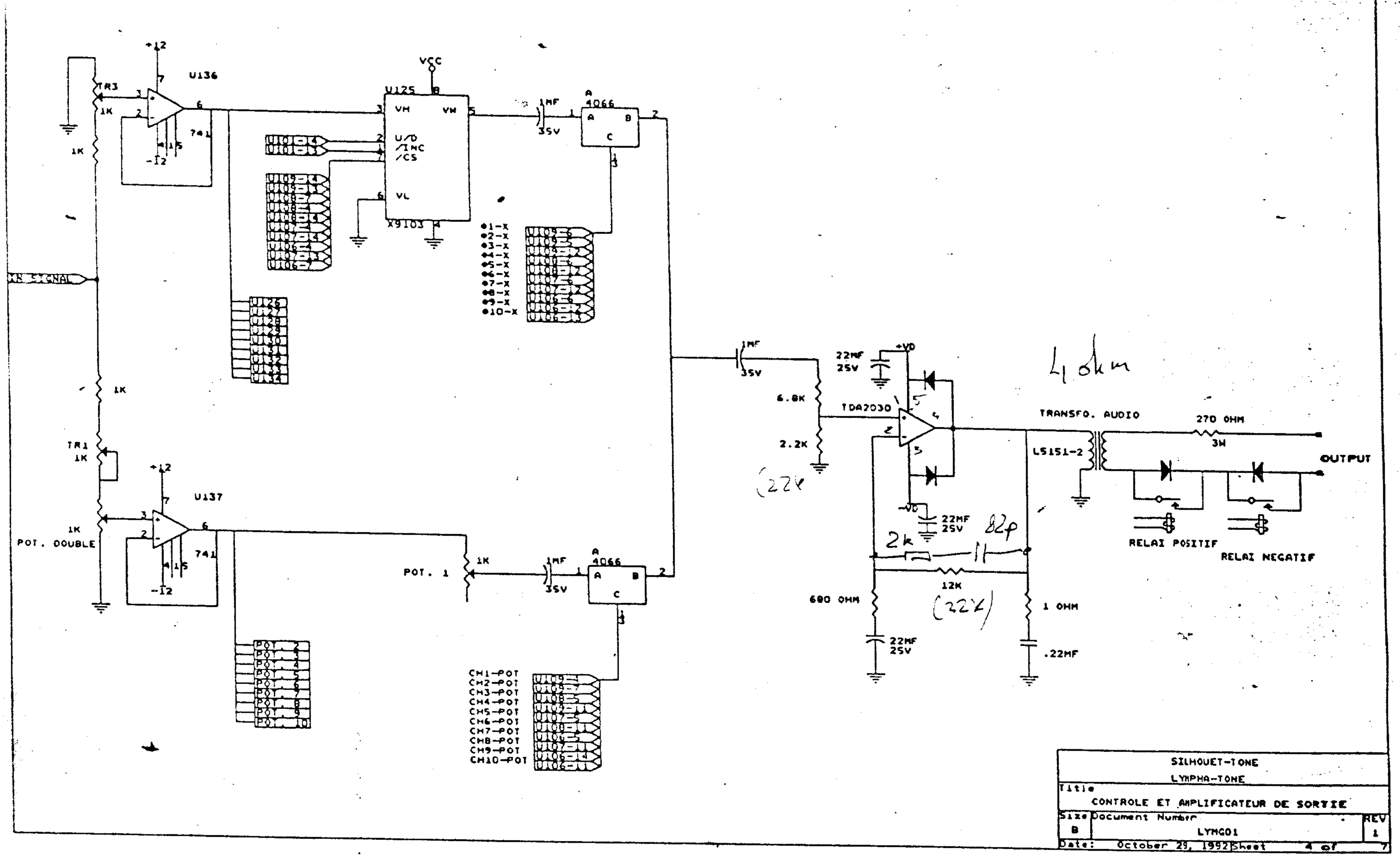

SILHOUET-TONE LYMPHA-TONE		
Title CONTROLE ET AMPLIFICATEUR DE SORTIE		
Size B	Document Number LYMG01	REV 1
Date: October 29, 1992	Sheet 4 of 7	