JVC

SERVICE MANUAL

CASSETTE CAR RECEIVER

KS-RX147 C/J

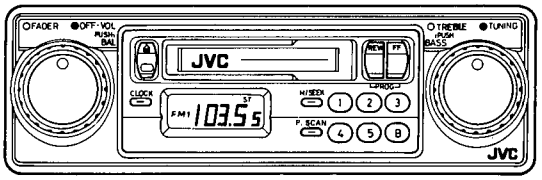

Contents

1. Specifications Page2
2. Instructions 3
3. Location of Main Parts 10
4. Removal of Main Parts 11
5. Analytic Drawing and Parts List 14
6. Main Adjustment 19
7. Block Diagram 24
8. Location of P. C. Board Parts 25
9. Standard Schematic Diagram 26
10. IC Block Diagram 28
11. Wiring Connections 32
12. Electrical Parts List 33
13. Illustration of Packing and Parts List 38
14. Accessories 39

No.49236
January 1995

1. Specifications

AUDIO AMPLIFIER SECTION
Maximum Power Output: (Front) 22 watts per channel
(Rear) 22 watts per channel
Continuous Power Output (RMS): (Front) 8 watts per channel into 4 Ω, 40 to 20,000 Hz at no more than 0.8% total harmonic distortion. (Rear) 8 watts per channel into 4 Ω, 40 to 20,000 Hz at no more than 0.8% total harmonic distortion.
Load Impedance: 4 Ω (4 – 8 Ω Allowable)
Tone Control Range
Bass: ±10 dB at 100 Hz
Treble: ±10 dB at 10 kHz
Frequency Response: 40 – 20,000 Hz
Signal-to-Noise Ratio: 60 dB

RADIO SECTION
Frequency Range
FM: 87.5 – 107.9 MHz (C/J)
87.5 – 108.0 MHz (A/U)
AM: 530 – 1,710 kHz (C/J)
531 – 1,620 kHz (A/U)
(C: Canada, J: U.S.A., A: Australia, U: Other areas)

(FM Tuner)
Usable Sensitivity: 15.3 dBf (1.6 μV/75 Ω)
50 dB Quieting Sensitivity: 18.8 dBf (2.4 μV/75 Ω)
Alternate Channel Selectivity (400 kHz): 65 dB
Frequency Response: 40 – 15,000 Hz
Stereo Separation: 35 dB
Capture Ratio: 2.0 dB
(AM Tuner)
Sensitivity: 20 μV
Selectivity: 35 dB

CASSETTE DECK SECTION
Wow & Flutter: 0.11 % (WRMS)
Fast Wind Time: 100 sec. (C-60)
Frequency Response:
50 – 14,000 Hz (±3 dB)
Signal-to-Noise Ratio: 52 dB
Stereo Separation: 40 dB

GENERAL
Power Requirement:
Operating Voltage: DC 14.4 V (11 V – 16 V Allowable)
Grounding System: Negative Ground
Dimensions (W x H x D)
Chassis: 178 x 50 x 134 mm
(7-1/16" x 2" x 5-5/16")
Nosepiece: 105 x 42 x 35 mm
(4-3/16" x 1-11/16" x 1-7/16")
Control Shaft Pitch: 148 mm (5-7/8")
Gross Weight: 1.5 kg (3.4 lbs)

Design and specifications subject to change without notice.

IMPORTANT INFORMATION

1. This unit is designed to operate with 12 volts DC, NEGATIVE ground electrical systems only.
2. Replace the fuse with one of the specified rating. If the fuse blows frequently, consult your JVC car audio dealer.
3. Do not touch the highly-polished head with any metallic or magnetic tools.
4. If noise is a problem...
This unit incorporates a noise filter in the power circuit. However, with some vehicles, clicking or other unwanted noise may occur. If this happens, connect the unit's rear ground terminal to the car's chassis using shorter and thicker cords, such as copper braiding or gauge wire. If noise still persists, consult your JVC car audio dealer.
5. Never play dirty or dusty tapes since they will greatly degrade the sound and performance of your unit. Always keep your tapes clean.

Antenna noise
If you can hear static noise when listening to both AM and FM, check for loose antenna connections.

2. Instructions

LOCATION OF CONTROLS

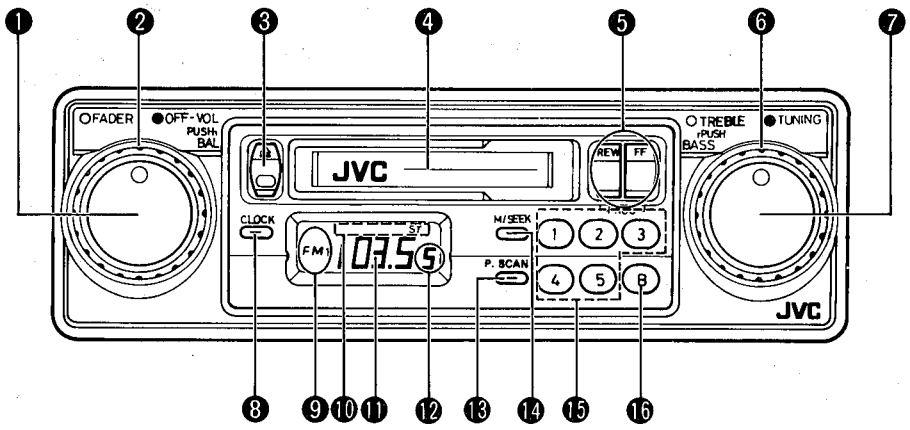

❶ Power on-OFF/volume (VOL)/Push balance (PUSH BAL) control
❷ FADER control
❸ Eject (▲) button
❹ Cassette loading slot
❺ Program (PROG)/REW, FF buttons
❻ TREBLE/PUSH BASS control
❼ TUNING/Time control
❽ CLOCK button
❾ Band indicator (FM1-FM2-FM3-AM)
❿ Indicators
SEEK
ST (FM Stereo)
◄► (Tape direction)
⓫ Radio frequency/Time display
⓬ Preset station indicator
⓭ Preset scan (P. SCAN) button
⓮ Manual (M)/SEEK button
⓯ Preset station buttons
⓰ Band (B) button

DIGITAL CLOCK DISPLAY

When listening to a tape, the display will show the time. When listening to the radio, each time the CLOCK button is pressed the time and frequency can be selected. When the radio is operated in the time mode, the display will switch to frequency, then, after a short time, will return to the time mode. To cancel the time mode, press the CLOCK button again.

- **To adjust the time**
  When the display is in the time mode, while keeping the CLOCK button pressed, turn the Tuning control counterclockwise to adjust the "hours" and turn the Tuning control clockwise to adjust the "minutes".

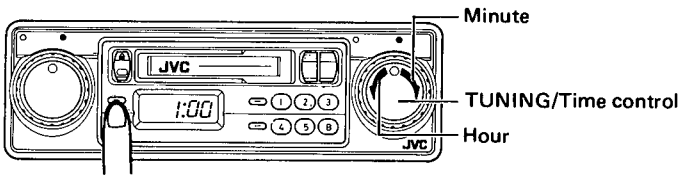

RADIO OPERATION

Operate in the order shown.

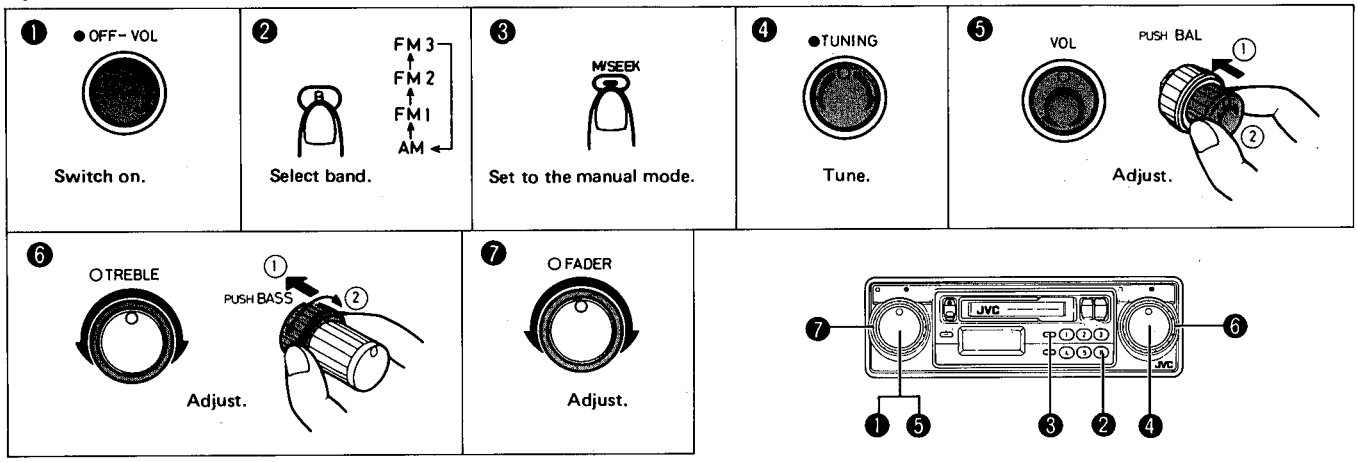

MANUAL TUNING

Set to the manual mode using the M/SEEK button. When SEEK is not shown in the display, the unit is in the manual mode. The Tuning control will not lock in place; it automatically returns to its center position when released. Keep the control in position for more than 0.5 second to change frequencies rapidly. You can step through the frequency in 200 kHz units (C/J version) or 100 kHz units (A/U version) for FM and 10 kHz units (C/J version) or 9 kHz units (A/U version) for AM.

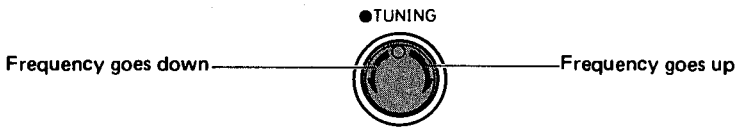

SEEK TUNING

Set to the seek mode using the M/SEEK button; the SEEK indicator will light. Then, by turning the Tuning control the unit tunes to the adjacent station with a higher or lower frequency.

PRESET SCAN BUTTON TUNING

This makes it possible to automatically scan preset FM and AM stations.

① **Press the P.SCAN button.**
② **Scanning is performed in the order of preset stations in each frequency band (FM1, FM2, FM3 and AM). Each preset station is heard for approx. 5 seconds.**
③ **When the required station is heard and its frequency is flashing, press the P.SCAN button again.**

TAPE OPERATION

Operate in the order shown.

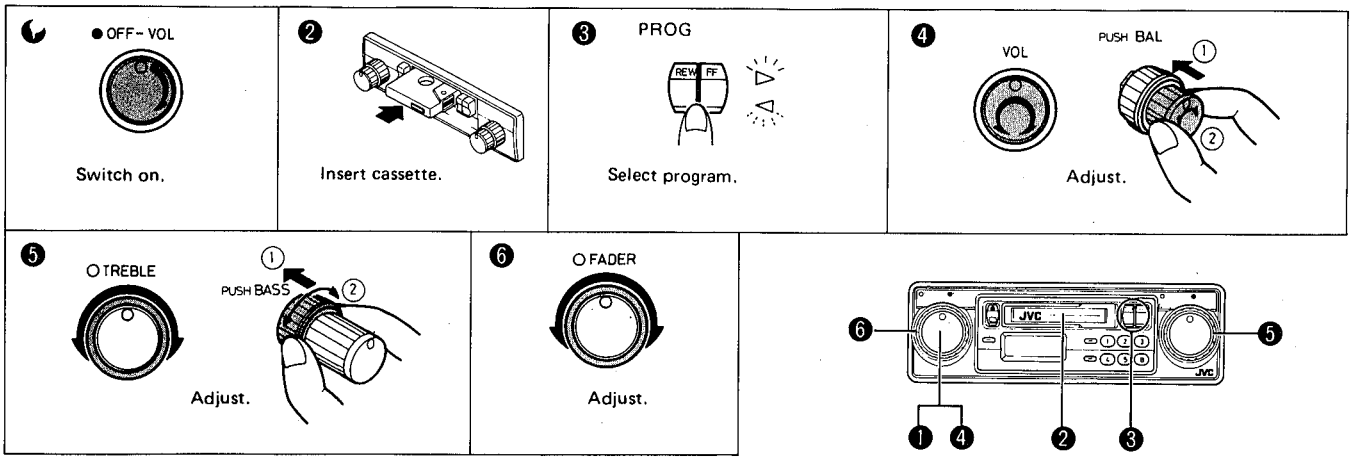

AUTOMATIC LOUDNESS CONTROL

At low volumes, the human ear is less sensitive to high and low frequencies. This unit incorporates a circuit so that the low-volume sound at high and low frequencies is automatically boosted to output well-balanced sound.

TO FAST FORWARD AND REWIND THE TAPE

Press the FF button to fast forward of the side being played back; when the end of tape is detected, the tape is reversed and played back from the beginning of the other side. Press the REW button to rewind the tape. When the tape is rewound to the beginning, it is played back again. Lightly press the other PROG button to start play from the current position during the fast forward or rewind mode.

AUTO-REVERSE MECHANISM

When the tape reaches the end of one side, this mechanism automatically switches over to play back the other side. To listen to the other side while playing one side, press the PROG buttons. The change in the tape transport direction can be checked from the Tape Direction indicators.

PRESET BUTTON TUNING

5 stations in each band (FM1, FM2, FM3 and AM) can be preset as follows;

- **Example (when presetting Preset Station button "5" to FM station at 103.5 MHz)**

① Select the FM1 band using the B button.
② Set to the manual mode.
③ Tune to the desired station.
④ Press Preset Station button "5" for more than 2 sec. (When "5" flashes in the Preset Station display, the station is preset.)

- Repeat the above procedure for each of the other four stations using a different Preset Station button each time.
- Follow the above procedure for the other bands (FM2, FM3 and AM).

Notes:

- The preset station is erased when a station is newly preset because the new station is stored in the memory.
- The preset station is erased when the power supply to the memory circuit is interrupted during battery replacement, etc. When this occurs, preset the station again.

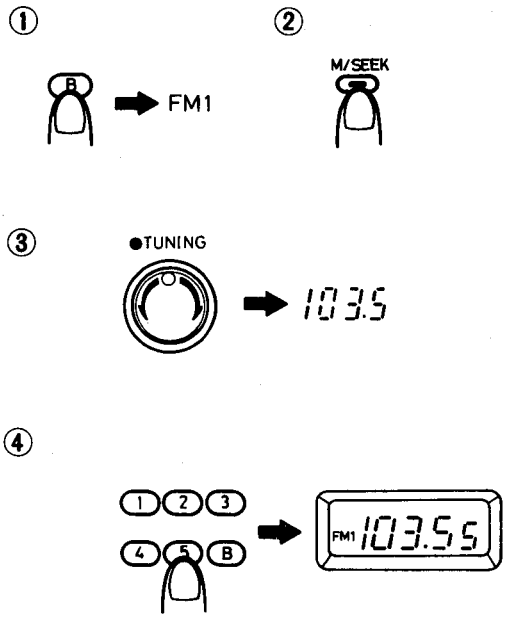

(RADIO RECEPTION)
Automatic FM Noise Suppressor (AFNS)

This unit incorporates an automatic FM noise suppression circuit to ensure satisfactory reception of FM broadcasts when a vehicle is moving and signal strengths are continuously fluctuating.

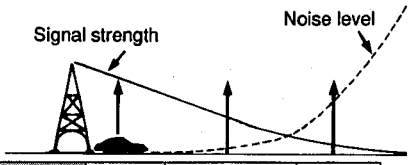

	A	B	C
Signal strength	Strong	Not so strong	Weak
Auto blend	Stereo	Blend	Mono
Auto high-cut	–	→	(Operates)

INSTALLATION (IN-DASH MOUNTING)

IMPORTANT
- Before using this unit for the first time, press the Eject button fully, to reset the mechanism.

- The following illustration shows a typical installation. However, you should make adjustments corresponding to your specific car. If you have any questions or require information regarding installation kits, consult your JVC car audio dealer or a company supplying kits.

Note:
In some cases, it may be necessary to adjust the opening in the trim plate and/or dashboard, etc. to fit your car.

- Examples for use of the back stay

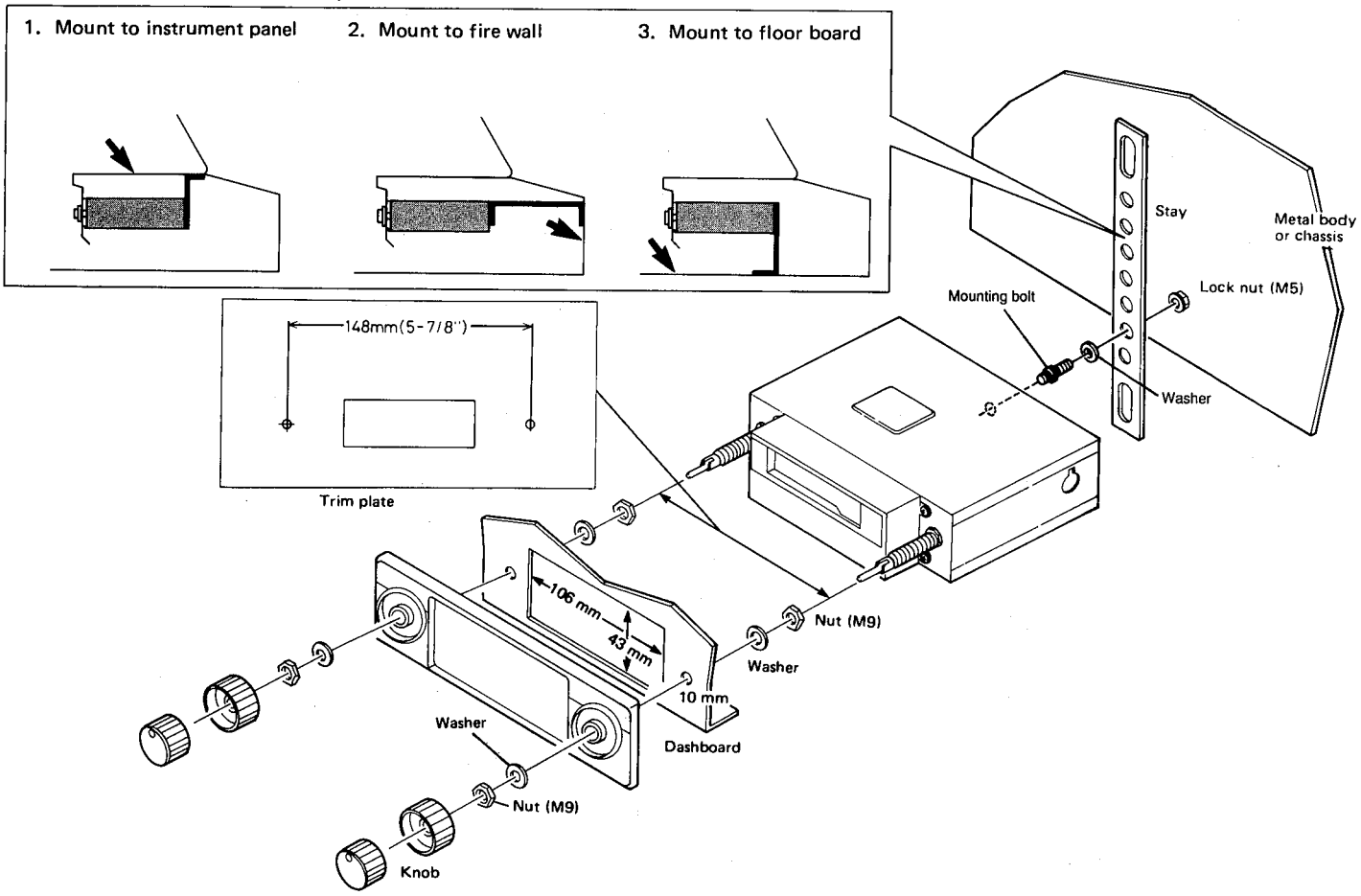

- Knob attachment

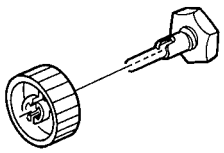

- Align both of the slots

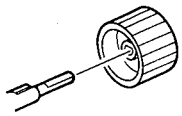

- Align the flat parts

- Make sure to assemble as shown, or the knobs will not fit.

ELECTRICAL CONNECTIONS

To prevent short circuits, we recommend that you disconnect the battery's negative terminal and make all electrical connections before installing the unit. If you are not sure how to install this unit correctly, have it installed by a qualified technician.

Note:
This unit is designed for a 12-volt DC negative ground. If your vehicle does not have this system, a voltage inverter is required, which can be purchased at JVC car audio dealers.

- Maximum input of the speakers should be more than 22 watts at the rear and 22 watts at the front, with an impedance of 4 to 8 ohms.

CAUTIONS:

As this unit uses BTL (Balanced Transformerless) amplifier circuitry (floating ground system), please comply with the following:

1. **Do NOT connect the black-lined speaker leads to a common point.**
2. **Do NOT connect the speaker leads to the metal body or chassis.**
3. **When NOT using the automatic antenna, cover the terminal with insulating tape to prevent the remote lead from shorting.**

- **Be sure to ground this unit to the car's chassis.**

A. 4-Speaker Connections

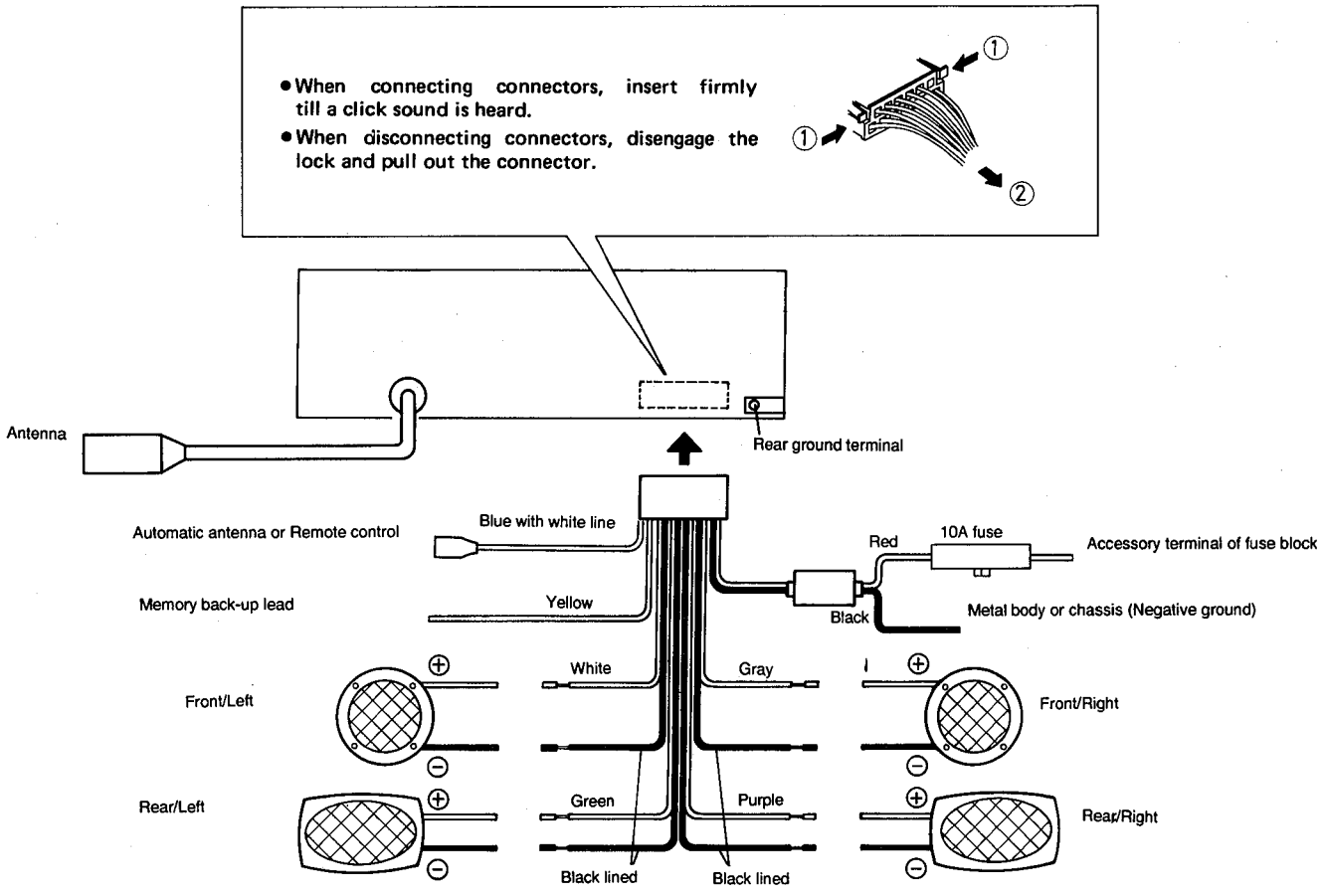

B. 2-Speaker Connections

Two speakers can be connected to either the front or rear pair of speaker output terminals. Cover the unused terminals with insulating tape to prevent short-circuits.

C. Autmatic Antenna Connections

To use the automatic antenna, connect its remote lead (blue with white line) terminal. For details of installation, see the automatic antenna's Instruction Manual.

D. Memory Back-Up Lead

Connect this lead to a LIVE power source (supplied even when vehicle ignition is OFF).

E. Fader Control

- **When used in a 4-speaker system**
  When the FADER control is turned counterclockwise, the sound will be heard from the front speakers, and when turned clockwise, from the rear speakers.
- **When used in a 2-speaker system**
  Set this control to the center position.

MAINTENANCE

- **Cleaning The Head**
  Heads are important as they pick up sound. When they become dirty, the following symptoms become noticeable:
  - The sound quality is reduced.
  - The sound level is decreased.
  - The sound can be heard intermittently. (Sound drop occurs.)

  These are NOT malfunctions. However, before these symptoms appear, clean the heads after every 10 hours of use using a wet-type head cleaning tape, available from an audio store. For more details, refer to the Instructions of the Head Cleaning Tape.

- Head cleaning tape

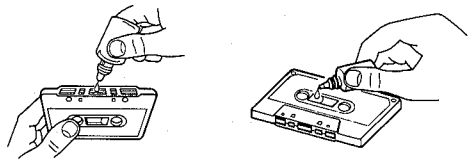

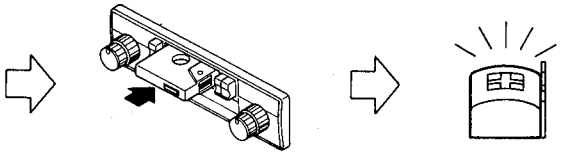

TAPE CARE HINTS

It is very important to keep your tapes clean.
Always return them to their storage boxes after playback.
Never store tapes in direct sunlight, high humidity or extremely hot temperatures.
Never play dirty or dusty tapes — they can damage the head.
Slack tape in a cassette can cause trouble by becoming entangled with the capstan or pinch roller.

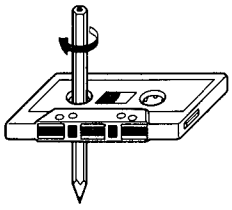

3. Location of Main Parts

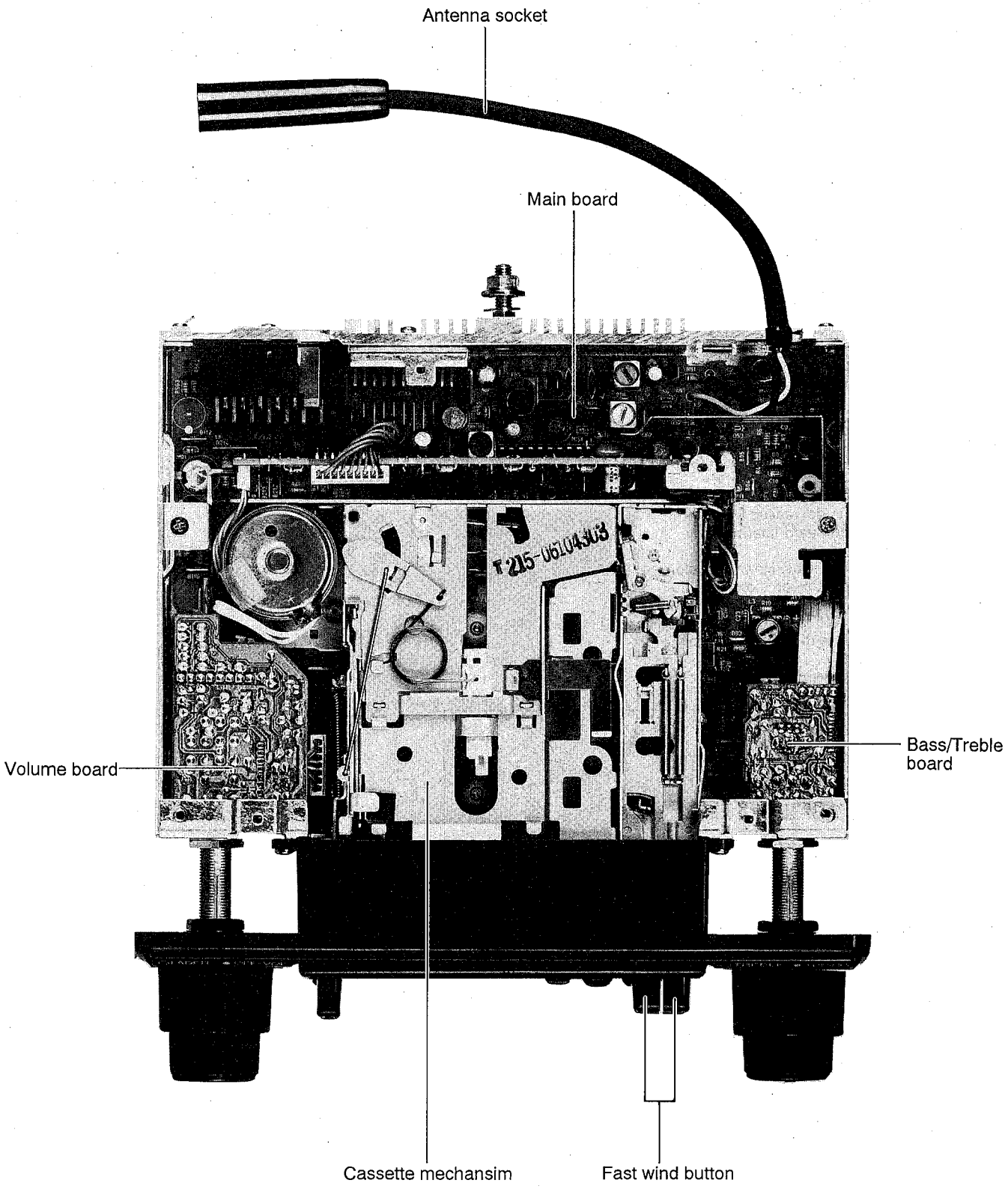

Fig. 3-1

4. Removal of Main Parts

■ **Top cover** (Figs. 4-1, 4-2, 4-3)

1. Remove three screws ([1] × 2, [2] × 1) retaining the top cover from the right top.
2. Remove two screws (3) retaining the top cover from the rear of the set.
3. Insert an ordinary screwdriver into a gap between the main body and the top cover while lifting the top cover upward to remove it.

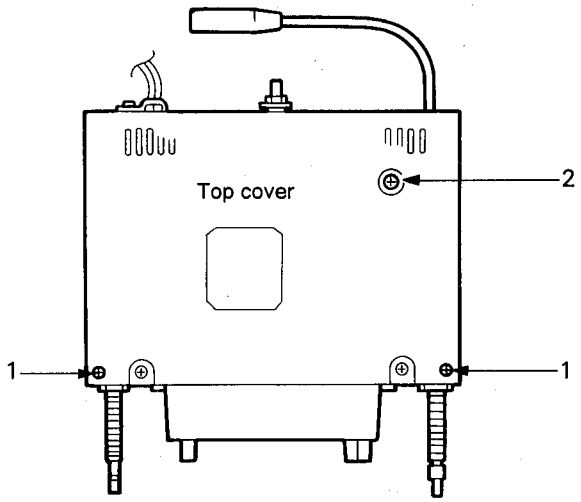

Fig. 4-1

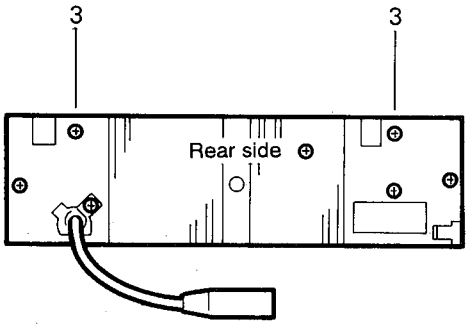

Fig. 4-2

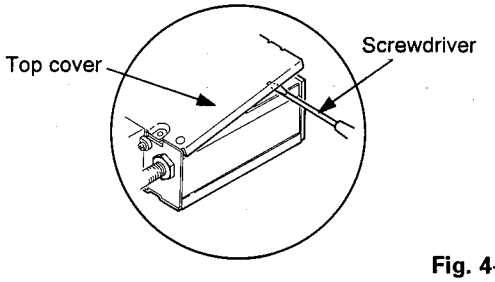

Fig. 4-3

■ **Nosepiece assembly** (Fig. 4-4)

- Remove four screws (4) retaining the nosepiece assembly from the front of the set.

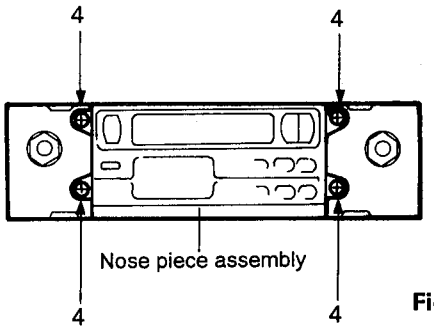

Fig. 4-4

■ **Cassette mechanism assembly** (Figs. 4-5, 4-6)

1. Remove the top cover. (Refer to the removal procedure of "Top cover" mentioned above.)
2. Remove two flat head screws (5) retaining the cassette mechanism assembly from the main body.
3. Disconnect a 5-pin connector cable originating from the head relay board from the connector on the pre-amp board.
4. Disconnect a 7-pin connector cable that is connected to the connector CJ701 on the main board from the connector on the mechanism switch board.
5. Place the set upside down, and remove two flat head screws (6) retaining the cassette mechanism assembly.

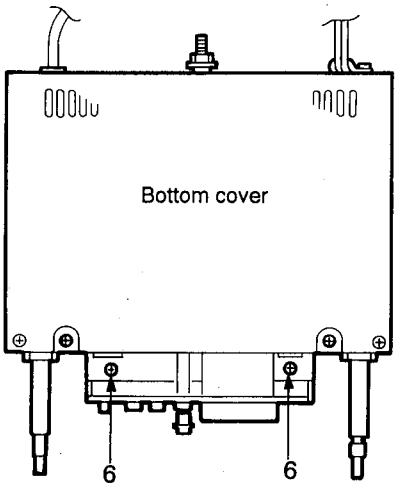

Fig. 4-6

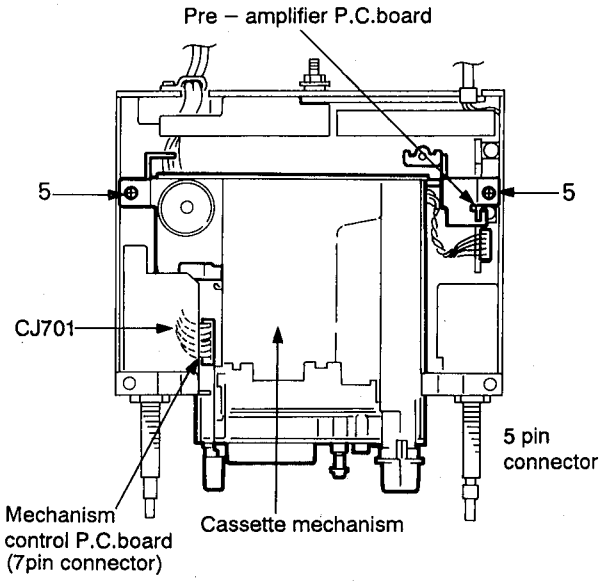

Fig. 4-5

■ **Motor assembly and Belt** (Fig. 4-7)

1. Place the cassette mechanism assembly upside down and hold the belt by a protrusion of the chassis to prevent it from getting soiled with oil, etc., and then remove two screws (7) retaining the motor assembly.
2. When re-engaging the belt for replacement, etc., make sure to engage it with the flywheels and the pulleys as shown in Fig. 4-7.

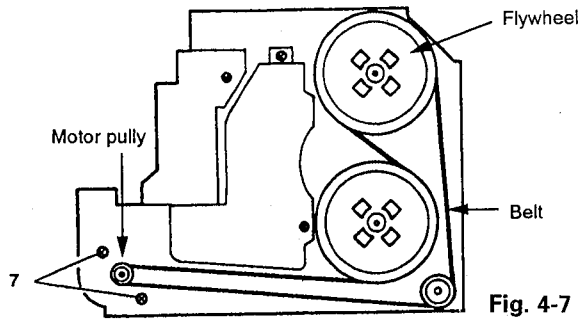

Fig. 4-7

■ **FF/REW lever assembly** (Figs. 4-8, 4-9)

1. Remove the cassette mechanism assembly. (Refer to the removal procedure of "Cassette mechanism assembly" mentioned above.)
2. Remove two screws (8) retaining the mechanism holder from the cassette mechanism assembly.
3. Remove one screw (9) retaining the FF/REW lever assembly from the cassette mechanism assembly. (See Fig. 4-9.)
4. Lift the FF/REW lever assembly in the arrow direction as shown in Fig. 4-9.
5. Disengage the tip of the FF/REW lever from the cutout portions of the chassis. (See Fig. 4-9.)

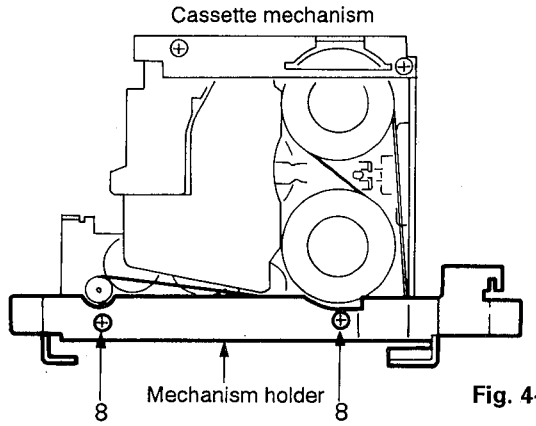

Fig. 4-8

■ **PB head** (Figs. 4-9, 4-10)

1. Remove the top cover. (Refer to the removal procedure of "Top cover" mentioned above.)
2. Remove the cassette mechanism assembly. (Refer to the removal procedure of "Cassette mechanism assembly" mentioned above.)
3. Remove the FF/REW lever assembly. (Refer to the removal procedure of "FF/REW lever assembly" mentioned above.)
4. Remove one screw (10) retaining the head relay board from the cassette mechanism assembly.
5. Remove two screws (11) retaining the PB head. When re-assembling, make sure to do it in the order from A, B, C to D and then to adjust the azimuth and height of the head.

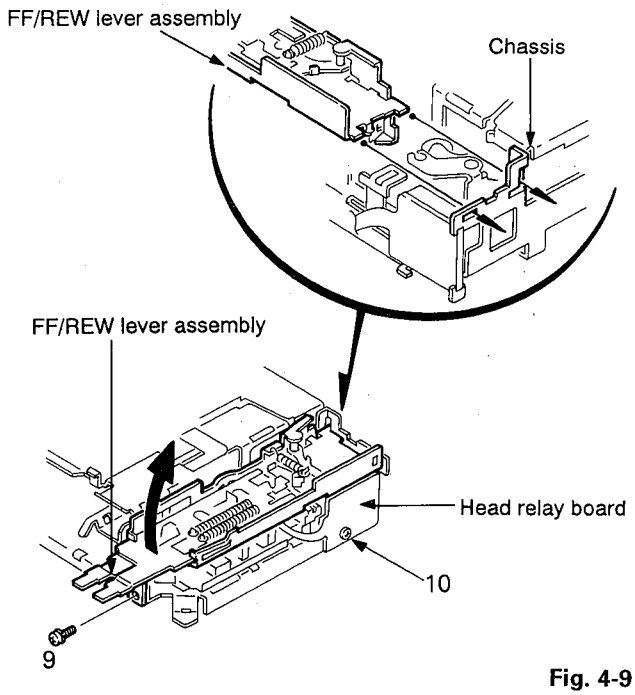

Fig. 4-9

■ **Pinch roller assembly** (Fig. 4-10)

1. Remove the top cover. (Refer to the removal procedure of "Top cover" mentioned above.)
2. Remove the cassette mechanism assembly. (Refer to the removal procedure of "Cassette mechanism assembly" mentioned above.)
3. Remove the FF/REW lever assembly. (Refer to the removal procedure of "FF/REW lever assembly" mentioned above.)
4. Remove nylon washers retaining the right and left pinch roller assemblies.

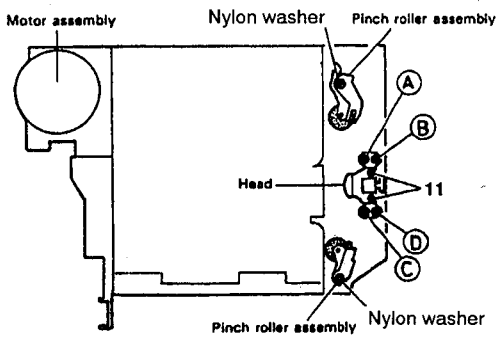

Fig. 4-10

■ **Bottom cover** (Figs. 4-11, 4-12, 4-13)

1. Place the set upside down, and remove two screws (12) retaining the bottom cover.
2. Place the set on its front side and remove two screws (13) retaining the bottom cover.
3. Remove the bottom cover in the same manner as for the top cover.

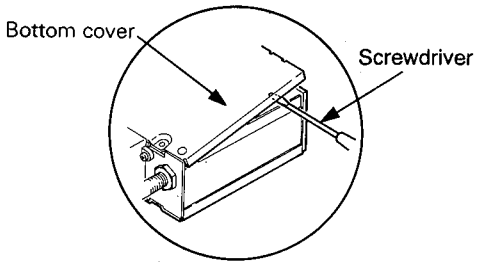

Fig. 4-13

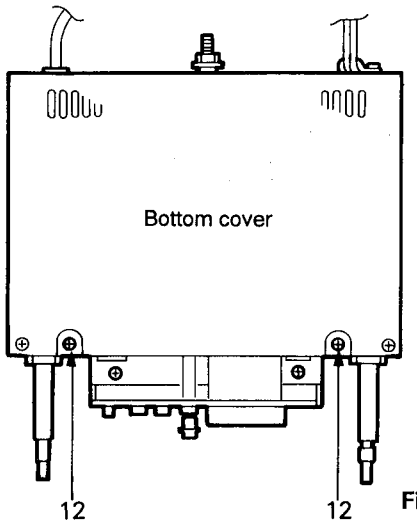

Fig. 4-11

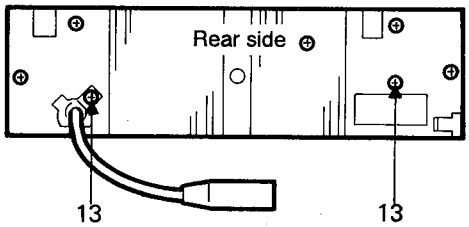

Fig. 4-12

■ **Volume boards in both sides** (Fig. 4-14)

1. Remove the top cover. (Refer to the removal procedure of "Top cover" mentioned above.)
2. Facing the front of the set, remove the nut with washer retaining the volume/balance board.
3. Remove the volume shaft through the hole in the front frame.
4. Disconnect the connector CJ907 on the pre-amp board from the connector CN907 on the main amp board.
5. Remove the nut with washer retaining the treble/bass board.
6. Remove the volume shaft through the hole in the front frame.

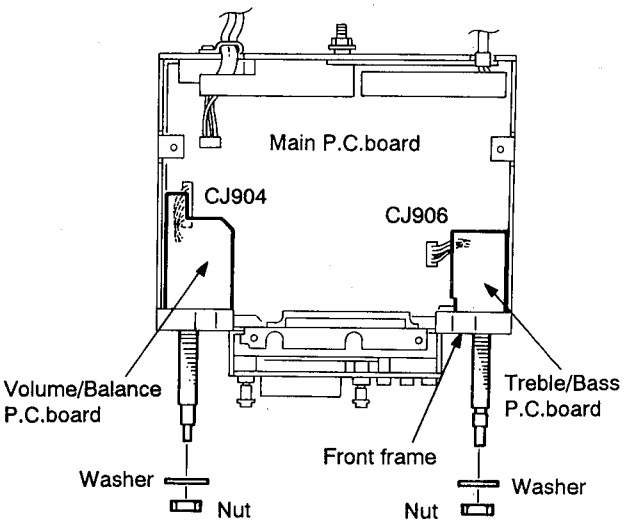

Fig. 4-14

5. Analytic Drawing and Parts List

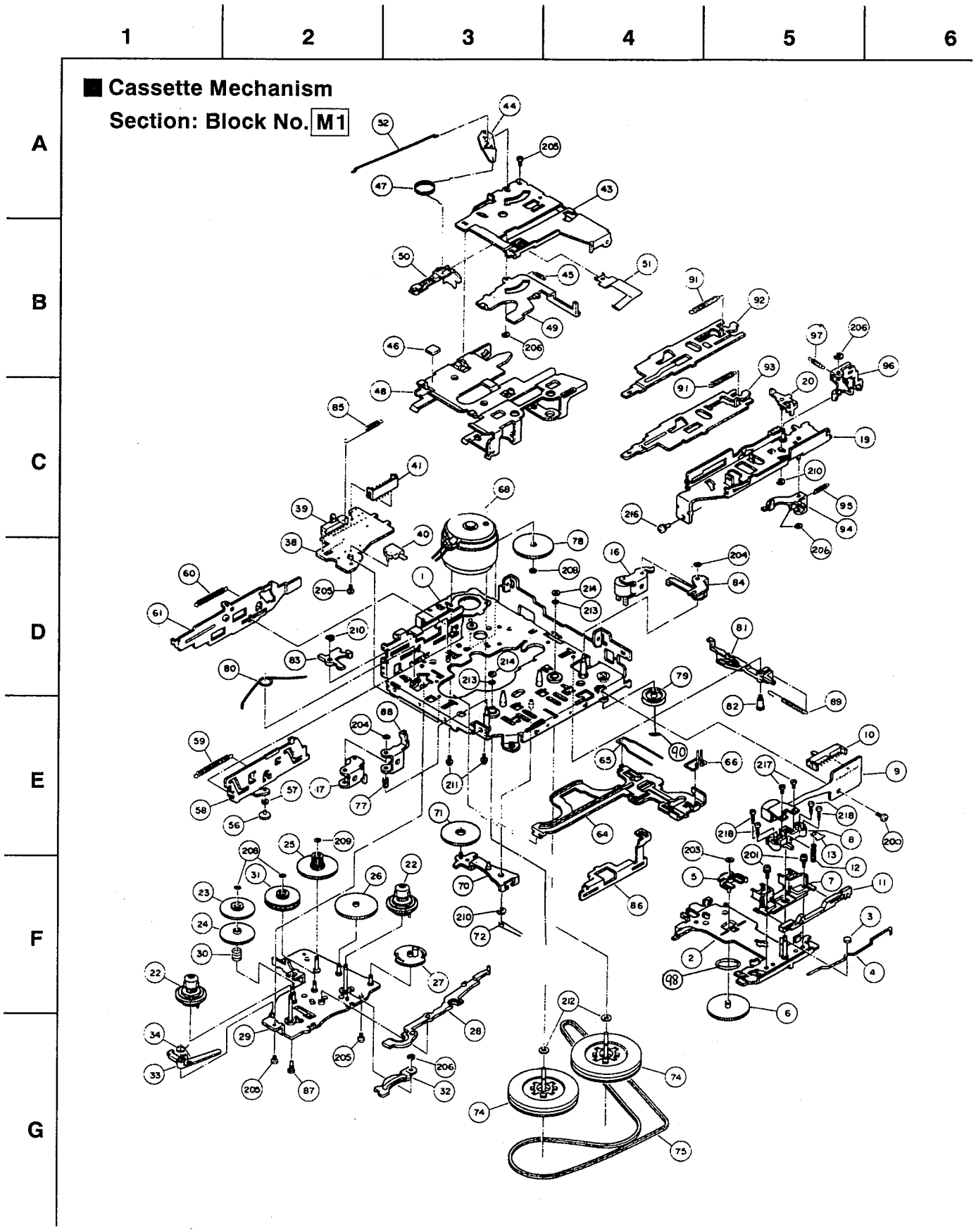

Fig. 5-1

■ Cassette Mechanism Parts List

BLOCK NO. M1MM

⚠	REF.	PARTS NO.	PARTS NAME	REMARKS	QTY	SUFFIX	CLR
	1	194001519T	CHASSIS ASS'Y		1		
	2	194016501T	HEAD PANEL ASY		1		
	3	19400303T	SP ROLLER		1		
	4	19400304T	P.R.SPRING		1		
	5	19400305T	P.GEAR METAL		1		
	6	19400306T	P.GEAR		1		
	7	19400312T	TAPE GUIDE U		1		
	8	19400327T	HEAD HOLDER B		1		
	9	62011702T	PB HEAD	P-7542-BB0571	1		
	10	64020207T	SLIDE SWITCH	SSSSA3002A	1		
	11	19400328T	SHIFT PLATE B		1		
	12	19400315T	H.G SPRING		1		
	13	9F2635010T	FASTEN WASHER		1		
	16	194004301T	P.ROLL.ARM(F)AS		1		
	17	194004302T	P.ROLL.ARM(R)AS		1		
	19	194005503T	F.R.BKT(M)ASS'Y		1		
	20	194005504T	SEESAW P(M)ASY.		1		
	22	194006302T	T.REEL ASS'Y		2		
	23	19400612T	P.GEAR (R)		1		
	24	19400613T	F.GEAR (R)		1		
	25	19400615T	P.D.GEAR		1		
	26	19400616T	E.D.GEAR		1		
	27	19400617AT	REVERSE GEAR(M)		1		
	28	19400648T	E.D.PLATE B		1		
	29	194002501T	M.G.P.SEMI-ASY.		1		
	30	19400635T	TN SPRING		1		
	31	194006312T	P.CLUTCH ASS'Y		1		
	32	194014129T	LIFT UP PLATE		1		
	33	19401464T	ANTI-REV ARM		1		
	34	19401460T	TRI ARM SPRING		1		
	38	19400704T	SW SUBSTRATE		1		
	39	64020206T	SLIDE SWITCH	SSSSA2001A	1		
	40	64020405T	PUSH SWITCH	SPVC11001A	1		
	41	68140245T	CONNECTOR	53253-0720	1		
	43	19400801T	CASE LIFTER		1		
	44	184008503T	P.E PLATE ASS'Y		1		
	45	18400820T	SPRING		1		
	46	18400875T	CUSSHION RUBBER		1		
	47	19400813T	REVERSE SP.C		1		
	48	19401410T	CASSETTE CASE M		1		
	49	19400804T	C.D PLATE B		1		
	50	19400810T	PACK SLIDER		1		
	51	19400806T	PACK PRESS.SP.		1		
	52	18400823T	P.E SPRING		1		
	56	19400901T	H.P.ROLLER(A)		1		
	57	19400902T	H.P.ROLLER(B)		1		
	58	19400903T	C.H.PUSH PLAT.M		1		
	59	19400905T	C.H.SPRING		1		
	60	19400906T	PUSH LEVER SP.		1		
	61	19400907T	PUSH LEVER M		1		
	64	19401001T	MAIN PLATE		1		
	65	19401002T	M.S.SPRING		1		
	66	19401007T	H.S.SPRING		1		
	68	194011310T	MOTOR ASS'Y	MCI-5U3LCKA	1		

BLOCK NO. M1MM

⚠	REF.	PARTS NO.	PARTS NAME	REMARKS	QTY	SUFFIX	CLR
	70	194012504T	FR W.PLT.SEM.AS		1		
	71	19401703T	F.GEAR		1		
	72	19401704T	FR SPRING M		1		
	74	194013303T	F.L.CAPS.ASS'Y		2		
	75	19401417T	MAIN BELT		1		
	77	18400437T	P.P SPRING		1		
	78	194014123T	MAIN GEAR M		1		
	79	194014115T	MIDDLE PULLEY		1		
	80	19401403T	HEAD PANEL SP.M		1		
	81	19401405T	TRIGGER ARM(C)		1		
	82	19401406T	COLLAR SCREW(T)		1		
	83	19401408T	H.P.PUSH ARM		1		
	84	19401409T	SEESAW WRK.PLT.		1		
	85	19401412T	POWER SW.SPRING		1		
	86	194014127T	FR SLIDE PLT.M		1		
	87	19401415T	COLLAR SCREW(P)		1		
	88	19401416T	H.P.RETURN ARM		1		
	89	19401407T	T.A.SPING(C)		1		
	90	9W0225010T	P.WASHER CUT		1		
	91	19401589T	FR LEVER SPRING		2		
	92	19401590T	FF LEVER (MH)		1		
	93	19401591T	REW LEVER(MH)		1		
	94	19401503T	P.C.PLATE		1		
	95	19401504T	P.C.SPRING		1		
	96	19401505T	ROCK PLATE (M)		1		
	97	19401506T	ROCK PLATE SP.M		1		
	98	9W0540020T	HL WASHER	10 X 14 X 0.4	1		
	200	9P1220051T	S TAPPING SCREW	M2 X 5	1		
	201	9P0220051T	TAMS SCREW	M2 X 5	2		
	203	9W0640070T	HL WASHER CUT	2.1 X 4 X 0.4	1		
	204	9W0630060T	HL WASHER CUT	1.6 X 3.8 X 0.3	2		
	205	9C0420303T	S TAPPING SCREW	FOR CAMERA M2X3	4		
	206	9E0100152T	E RING	S1.5	4		
	208	9W0625030T	HL WASHER CUT	1.2 X 3 X 0.25	3		
	209	9W0630050T	HL WASHER CUT	1.6 X 3.4 X 0.3	1		
	210	9E0100202T	E RING	S2.0	3		
	211	9P0220031T	TAMS SCREW	M2 X 3	2		
	212	9W0513060T	HL WASHER	2.1 X 5 X 0.13	2		
	213	9W0520010T	HL WASHER CUT	1.85 X 3.2 X 0.	2		
	214	9W0650030T	HL WASHER CUT	1.5 X 3.2 X 0.5	2		
	216	9P0226041T	TAMS SCREW	M2.6 X 4	1		
	217	9F2720401T	FIX SCREW	FOR HEAD	2		
	218	9F2220071T	ADJUST SCREW		4		

■ Enclosure Assembly Section: Block No. M2

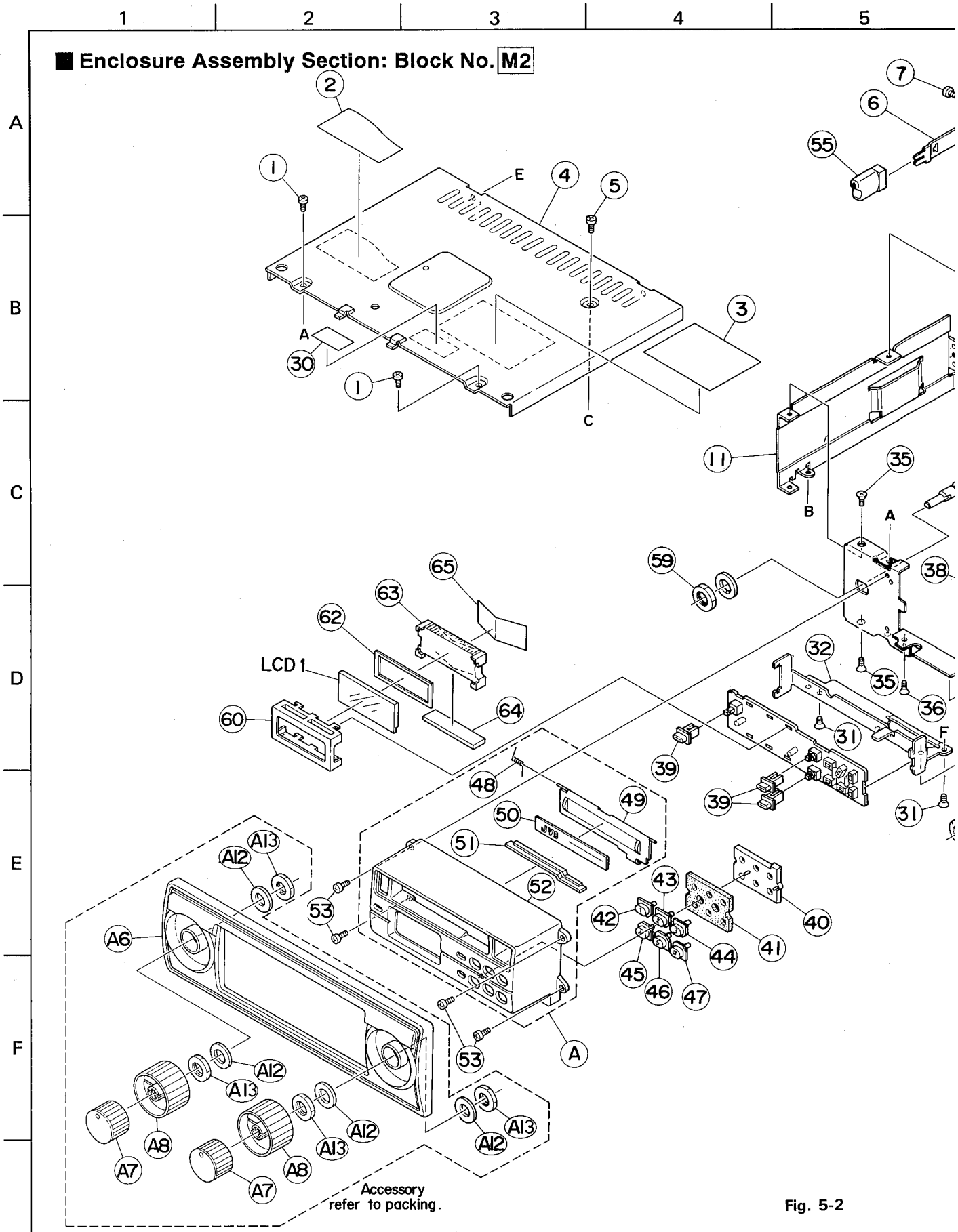

Fig. 5-2

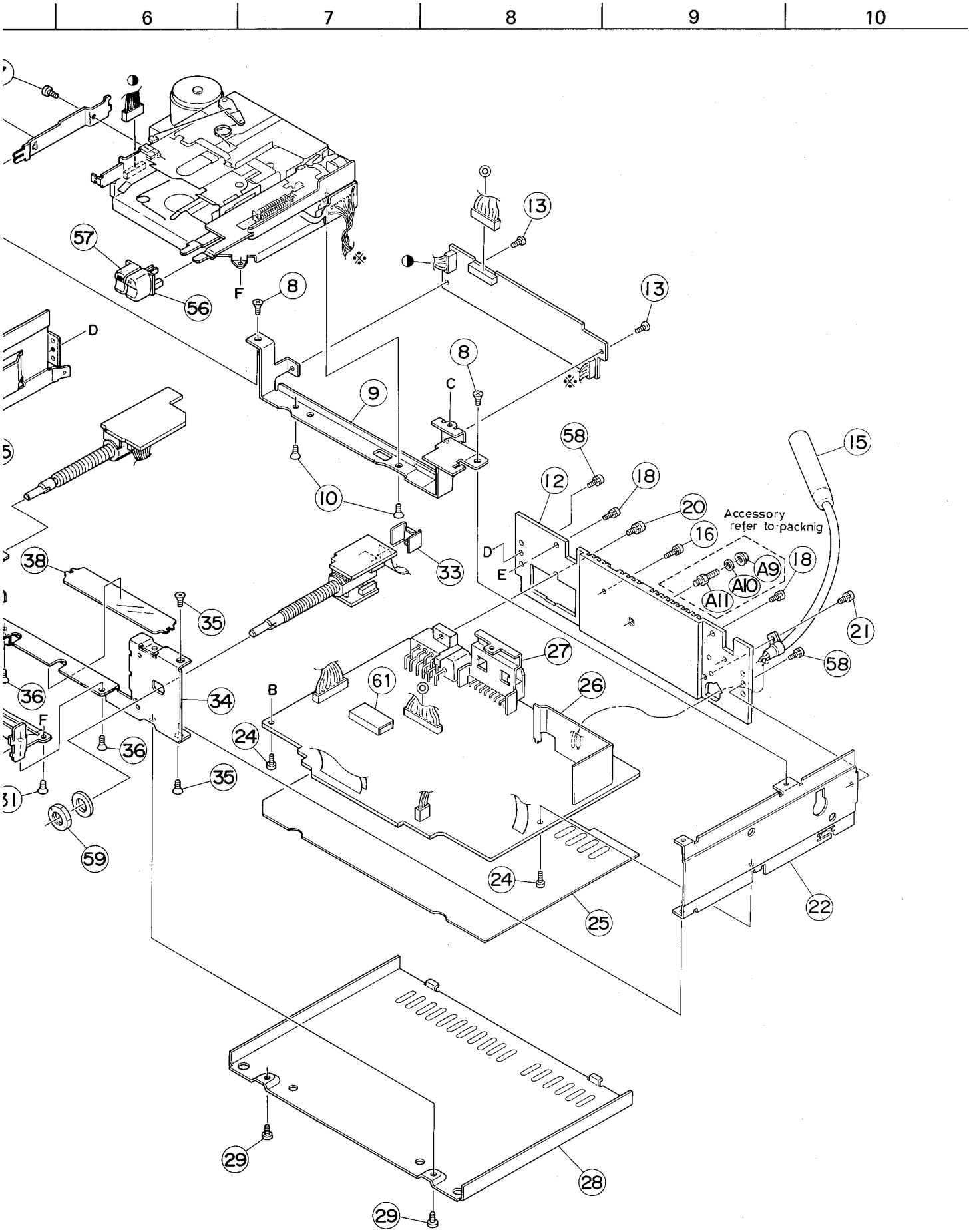
6
7
8
9
10
Accessory
refer to packnig

■ Enclosure Assembly Parts List

BLOCK NO. M2MM

⚠	REF.	PARTS NO.	PARTS NAME	REMARKS	QTY	SUFFIX	CLR
	A	ZCKSRX147J-NPA	NOSE PIECE		1		
	1	SDST2604Z	SCREW	FRONT+TOP COVER	2		
	2	VND5008-001	FCC CAUTION		1		
	3	FSYN3007-006	NAME PLATE		1		
	4	VKM3477-001	TOP COVER		1		
	5	SDST2604Z	SCREW	MECHA+TOP COVER	1		
	6	VKL6988-001	EJECT LEVER		1		
	7	SPSK2625Z	SCREW	EJECT LEVEL	1		
	8	SSST2606Z	SCREW	SIDE+MECHA B(R)	2		
	9	VKM3569-001	MECHA HOLDER(R)		1		
	10	SSSP3006Z	SCREW	MECHA+MECHA B(R	2		
	11	VKM3478-001	LEFT FRAME		1		
	12	FSJC3006-001	REAR FRAME		1		
	13	VKZ4381-001	SCREW	HEAD AMP PCB	2		
	15	VMP0029-026	ANT SOCKET		1		
	16	LPSP2608N	SCREW	R.PANEL+I.C.BKT	1		
	18	LPSP2606Z	SCREW	R.PANEL+T.COVER	2		
	20	LPSP2608Z	SCREW	13 PIN CONNECTO	1		
	21	LPSP2606Z	SCREW	R.PANEL+ANT.COR	1		
	22	VKL3689-101	RIGHT FRAME		1		
	24	VKZ4381-001	SPECIAL SCREW	CHASSIS+MAIN PW	2		
	25	FSMA4001-002	INSULATOR		1		
	26	VMA4262-101	SHIELD PLATE		1		
	27	VKL7687-001	IC BRACKET		1		
	28	FSKL3006-001	BOTTOM COVER		1		
	29	SDST2604Z	SCREW	FRONT+B.COVER	2		
	30	E407097-002	LABEL		1		
	31	SSSP3006Z	SCREW	MECHA+MECHA B(F	2		
	32	FSKL3005-001	MECHA HOLDER(F)		1		
	33	VKL6420-001	VR.BRACKET		1		
	34	FSKM3001-002	FRONT FRAME		1		
	35	SSST2604Z	SCREW		4		
	36	SSST2606Z	SCREW	FRONT+M.HOLDER	2		
	38	VYTS494-001	SPACER		1		
	39	VXP3421-002	PUSH BUTTON		3		
	40	VJK3453-002	BUTTON LENS		1		
	41	VYTH471-004	BUTTON CUSHION	PRESET BUTTON	1		
	42	VXP3279-001	PRESET BUTTON	PRESET 1	1		
	43	VXP3279-002	PRESET BUTTON	PRESET 2	1		
	44	VXP3279-003	PRESET BUTTON	PRESET 3	1		
	45	VXP3279-004	PRESET BUTTON	PRESET 4	1		
	46	VXP3279-005	PRESET BUTTON	PRESET 5	1		
	47	VXP3279-007	PRESET BUTTON	PRESET 6	1		
	48	VKW4947-001	DOOR SPRING		1		
	49	VJC4145-002SS	CASSETTE LID		1		
	50	FSJD4004-002	LID PLATE		1		
	51	VJK3454-001SS	LIGHT LENS		1		
	52	VJC1982-001SS	NOSE PIECE		1		
	53	SDST2606Z	SCREW	FRONT+NOSE PIEC	4		
	55	VXP3503-001	EJECT BUTTON		1		
	56	VXP3505-001	F.F.BUTTON		1		
	57	VXP3504-001	REW BUTTON		1		
	58	LPSP2606Z	SCREW	SIDE+R.PANEL	2		
	59	VKZ4229-003	HEAVY NUT		2		
	60	VJC3188-001	LCD CASE		1		

BLOCK NO. M2MM

⚠	REF.	PARTS NO.	PARTS NAME	REMARKS	QTY	SUFFIX	CLR
	61	FSMA4002-002	SHIELD PLATE		1		
	62	VYTT531-002	SCREEN		1		
	63	VJK3451-002	LCD LENS		1		
	64	VMZ0053-003	CONNECTOR		1		
	65	VYTT451-014	SHEET		1		
	LCD 1	LCD8254JNH	LCD		1		

6. Main Adjustment

■ Equipment and measuring instruments used for adjustments

- Electronic voltmeter
- Audio frequency oscillator
- Attenuator (impedance 600 Ω)
- Wow-flutter meter
- Frequency counter
- Torque testing Cassette gauge
  TW-2111A (FWD PLAY)
  TW-2121A (REV PLAY)
  CTG-N (FF, REW)
- Mirror tape
- AM Standard Signal Generator
- FM Standard Signal Generator
- Alignment Tape
  VTT703L, VTT721, VTT712, VTT736
- EXT415-KIT: Extension Cord (Use for operation of Mechanism)

■ Condition for Measurement

Power Supply:	DC 14.4 V (Reduced voltage 10.5 V)	Loudness:	OFF
Load Inpedance:	Speaker 4 Ω (4 speakers Connection) (Line out 20 kΩ)	Balance:	Indication "0"
		Bass/Treble:	Indication "0"

■ Standard Volume Position

At standard condition for measurement, output level to be adjusted to 2.0 V with test tape VTT724 or TMT 7063MIX.

■ Tuner Section Adjustment

(The tuner pack is non-adjusting)

- Manual Tuning Up/Down Frequency

  FM ..... 200 K Step

  AM ..... 10 kHz Step

- Setting of Reference Frequency

  FM ... 400 Hz, 22.5 kHz Deviation

  FM STEREO ... 1 kHz, 67.5 kHz Deviation Pilot Signal 7.5 kHz

  AM ... 400 Hz, 30% Modulation

  Output level ... 0 dB = 1 μV, 50 Ω/Open terminal

Dummy Loads

Exclusive dummy for AM, FM should be used. When FM dummy load is used, 6 dB loss occurs between SSG output and antenna input. It is not necessary to consider the 6 dB loss since direct reading figures are used in this working standard.

- Reference Output of SSG

  FM ... 66 dBμV, at 97.9 MHz

  AM ... 74 dBμV, at 1000 kHz

- **Preset Memory of Initialize**

Band	Preset Memory				
	M1	M2	M3	M4	M5
FM (MHz)	87.5	89.9	97.9	105.9	107.9
AM (kHz)	530	600	1000	1500	1710

■ Arrangement of Adjusting Positions

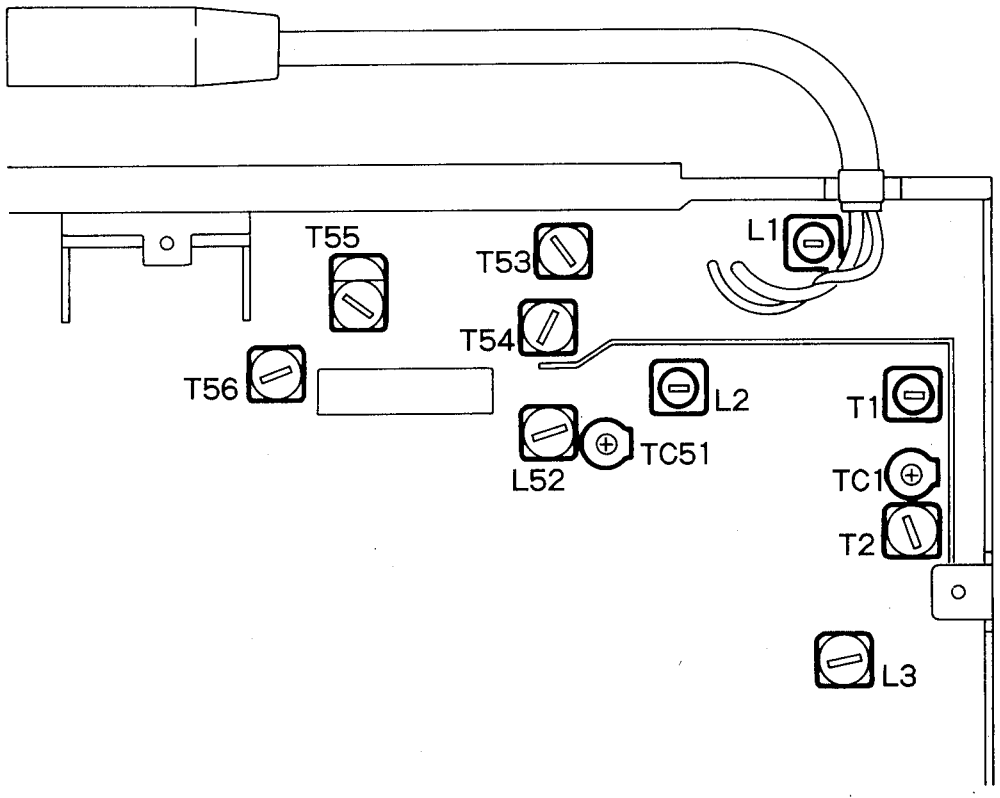

Fig. 6-1

Tape section adjustment

Item	Conditions	Adjustment and Confirmation methods	Stand.values	Adjust
1. Head Azimuth Adjustment	Test tape :VTT703L	1.Basically,this mechanism do not require to align head azimuth. But, it need to be confirm during FA process. 2.If the head azimuth is not aligned to the maximum or it is out of specification, adjustment will be necessary. 3.Adjustment point ① Screw A : It has been aligned by the supplier, so do not realign this screw. ② Screw B :It will be aligned to the maximum when at forward play mode , but it must not be align when at reverse play mode. ③ Screw C : It will be aligned to the maximum when at reverse play mode, but it must not be align when at forward play mode. 4. Repeat adjustment ② and ③ until forward and reverse mode gains are both optimised. 5. After alignment, no bonding is necessary to fasten the screws.	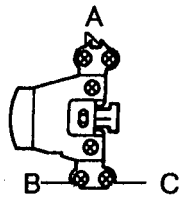 Fig. 6-2 Maximum Maximum Maximum	B Screw C Screw B,C Screw
2.Tape speed and wow – flutter confirmation	Test tape VTT712 at near tape end.	1. Check to see if the reading of the wow – flutter meter is within 3015 ~ 3045 Hz (FWD/REV), and less than 0.35% (JIS RMS). 2. In case of out of specification, adjust the motor with a built – in volume resistor.	Tape speed :3015 ~3045Hz Wow – flutter : 0.35% (JIS RMS)	Motor with a builtin volume resistor
3.Playback frequency response confirmation	Test tape VTT724, VTT736	1. Play test tape VTT724, the set the volume position at 2V. 2. Play test tape VTT736 through BPF 1kHz,125Hz and 12.5kHz or test tape VTT736. 3. Loudness effect should be checked at below standard volume position.	Speaker out 1k/125Hz :4 ± 3dB 1k/8kHz :0 ± 3dB	
4.Maximum output power confirmation	Test tape :VTT721 Volume& Tone :maximum	1. Confirm both the front and rea output to be more than 5.3V. 2. Confirm that consumption current at above condition to be less than 5A. 3. Sound leakage should not occur at volume minimum. 4. Oscillation should not occur at BASS/TREBLE at minimum.	Output level : more than 5.3V Consumption current : less than 5A	

Item	Conditions	Adjustment and Confirmation methods	Stand.values	Adjust
5. Playback noise	Empty tape	1.Noise level to be less than 3mV at volume minimum. 2.Current consumption to be less than 0.7A at above condition.	Less than 3mV Less than 0.7A	
6.BASS/TREBLE	FM 97.9MHz,66dB μ ,22.5kHz dev.with center click,pre – emphasis 75 μ s.		100 Hz : ± 7~13dB (variable) 10kHz : ± 7~13dB (variable)	

■ Tuner section adjustment

Item	Conditions	Adjustment and Confirmation methods	Stand.values	Adjust
1.AM voltage adjustment	Test point:TP51 Measuring :AM 530kHz : AM 1710kHz		1.2 ± 0.02V 8.0 ± 0.1V	L52 TC51
2.AM antenna adjustment	AM 600 kHz weak signal AM 1500 kHz weak signal	Note : Repeat until tracking at 600 kHz and 1500 kHz are both optimized. Voltage at 1710 kHz should be below 8.5V.	Output maximum Output maximum	In sequence T53,T54 repeatedly until O/P is maximum TC51
3.AM IF adjustment	AM 600kHz weak signal		Output maximum	TC55, T56
4.S/N sensitivity confirmation	AM 1000kHz,34dB μ	Output difference level between modulation ON/OFF to be more than 20 dB.	more than 20dB	
5.Radio/Tape level difference confirmation	AM 1000kHz,1kHz,30% modulation,74dB μ	Against VTT724, the output difference level to be within – 4 to – 10dB.	within – 4 to – 10dB	
6.Auto stop sensitivity confirmation	AM 1000kHz, 26 to 40 dB	1.Start seek and then stop within the above condition. 2.Not to stop lower than minimum mentioned sensitivity.		

Item	Conditions	Adjustment and Confirmation methods	Stand.values	Adjust
1.FM voltage adjustment	Test point :TP11 FM 107.9MHz		7.8 ± 0.05V	L2
2.FM 0V adjustment	Test point:TP1 FM 97.9MHz, 66dB non modulation		0 ± 0.01V	L3
3.FM antenna adjustment	FM 107.9MHz weak signal	Note;Repeat adjustment until tracking at 107.9MHz and 87.5MHz are both optimised. Align frequency 107.9MHz first. If core is out more than 1mm from bobbin, put wax on the core.	Output maximum	TC1
	FM 87.5MHz weak signal			L1, T1
4.FM IF adjustment	FM 97.9MHz weak signal		Output maximum	T2
5.FM S/N sensitivity	97.9MHz ,22dB μ	Output difference level between modulation ON & OFF to be more than 30 dB.	more than 30 dB	
6.FM stereo indication sensitivity	97.9MHz, 1kHz , 67.5kHz dev. ,pilot 7.5kHz dev.	1.When input is 22 dB μ ," ST " indication appears. 2.When input is 0 dB μ , " ST " indication disappears.		
7.FM stereo separation	97.9MHz, 1kHz, 67.5kHz dev.	1.Separation to be more than 24dB. 2.The left / right difference to be within 3 dB.	more than 24dB	
8.FM S/N ratio	97.9MHz,66dB μ	Output difference level between modulation ON/OFF to be more than 50dB.	more than 50dB	
9.Radio/Tape level difference	1kHz,22.5kHz dev.,66dB μ	Against test tape VTT724, the output difference level to be within – 4 to – 10dB.	within – 4 to – 10dB	
10.FM muting	Apply standard signal at 97.9MHz, 66dB μ . Then reduce the output of SSG from 66dB to – 19dB.	Output difference level to be 8 to 25 dB.	8 to 25 dB	
11.Auto stop sensitivity	97.9MHz,22 to 36 dB μ	1.Start seek and then stop within the sbove sensitivity. 2.Not to stop lower than minimum mentioned sensitivity		
12.Clock adjustment	Test point :TP701 or B1 AM 1710 kHz	Note:1. Clock adjustment to be done after aligning tuner(To get higher accuracy). 2. High impredence can not to be use.	2160 ± 0.005kHz	TC701
13.Clock frequency check		Check the clock frequency to be within ± 15Hz at FA.	within ± 15kHz at FA	

7. Block Diagram

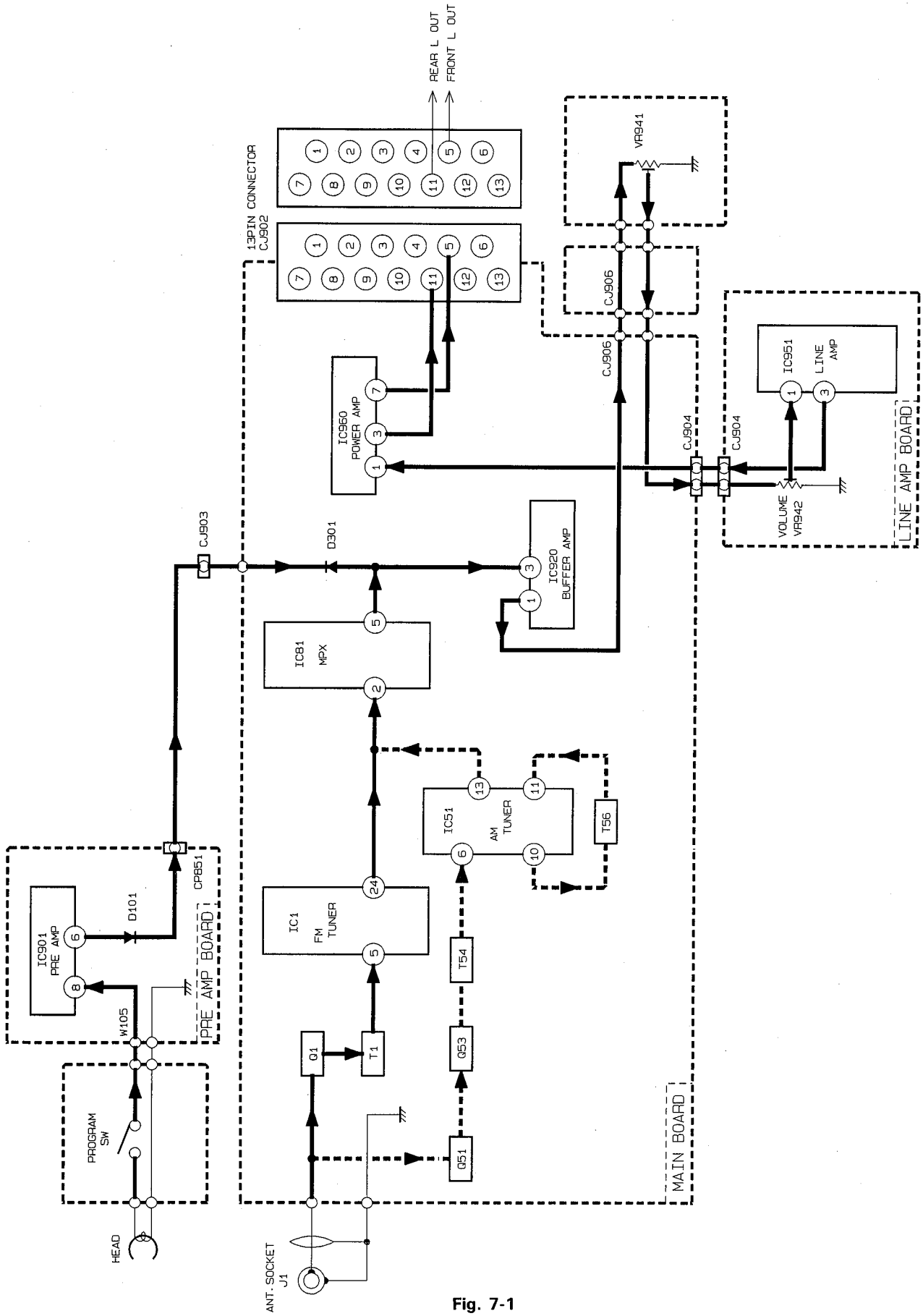

Fig. 7-1

8. Location of P.C. Board Parts

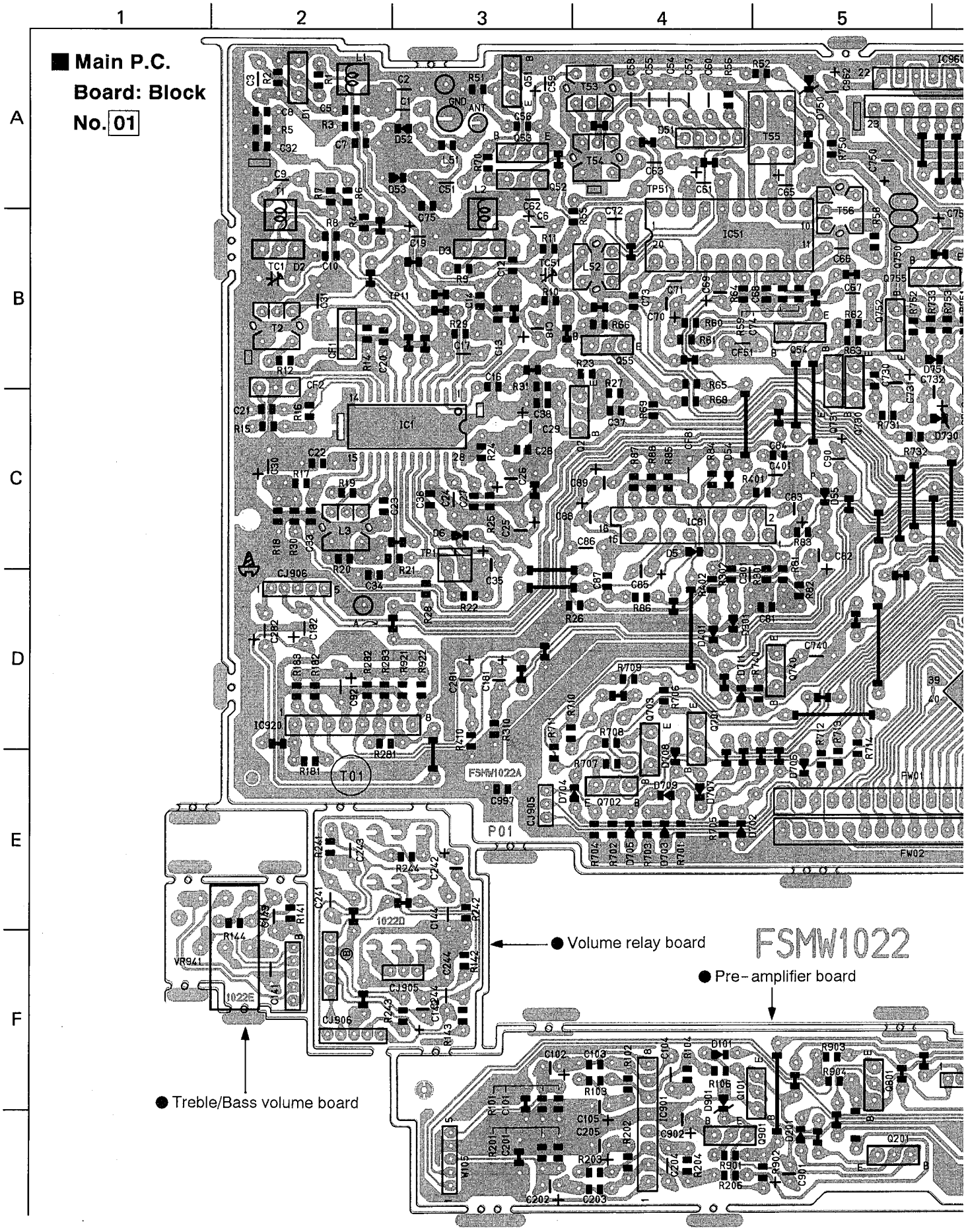

■ LCD/Operation Switch Board: Block No. 02

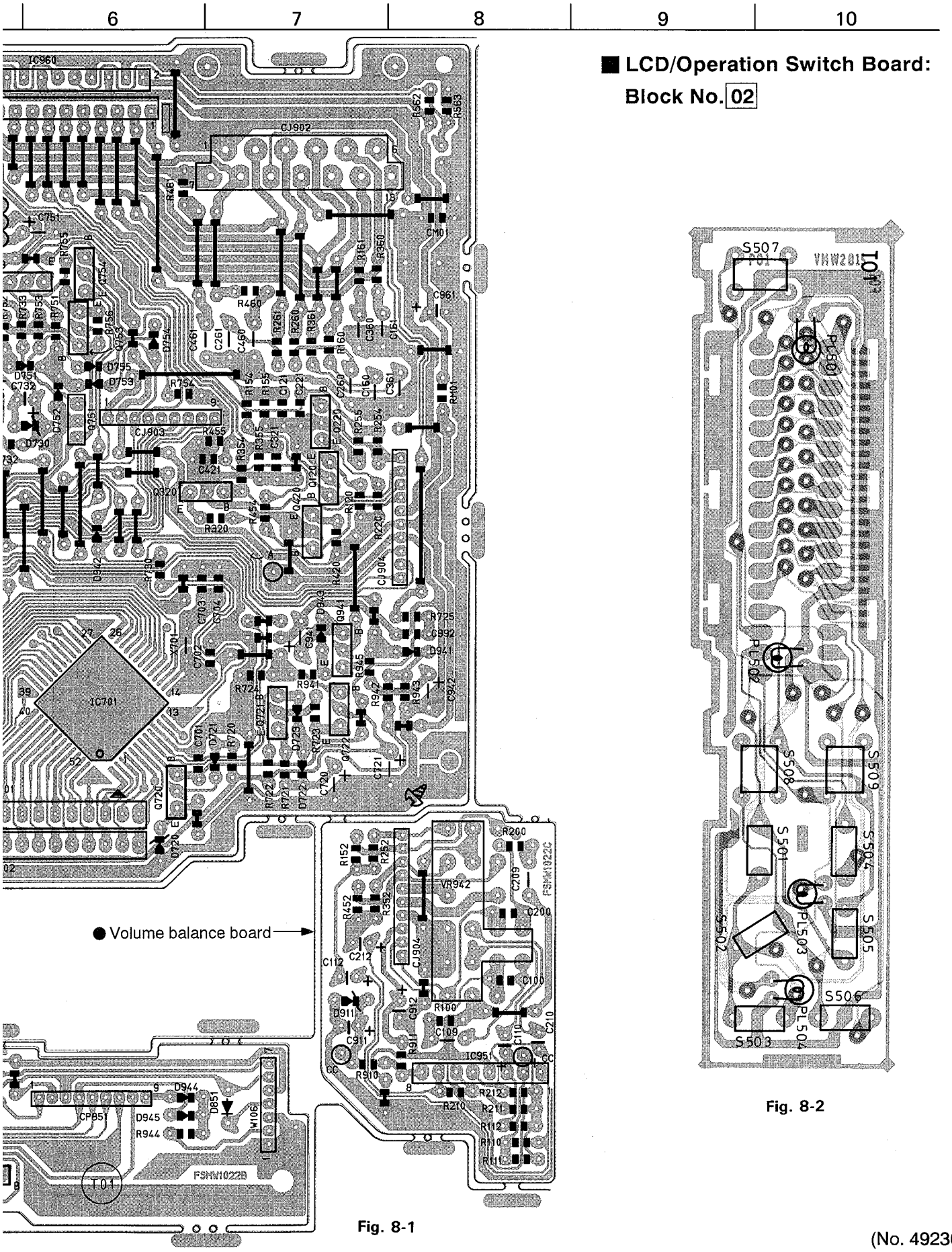

Fig. 8-1

Fig. 8-2

9. Standard Schematic Diagram

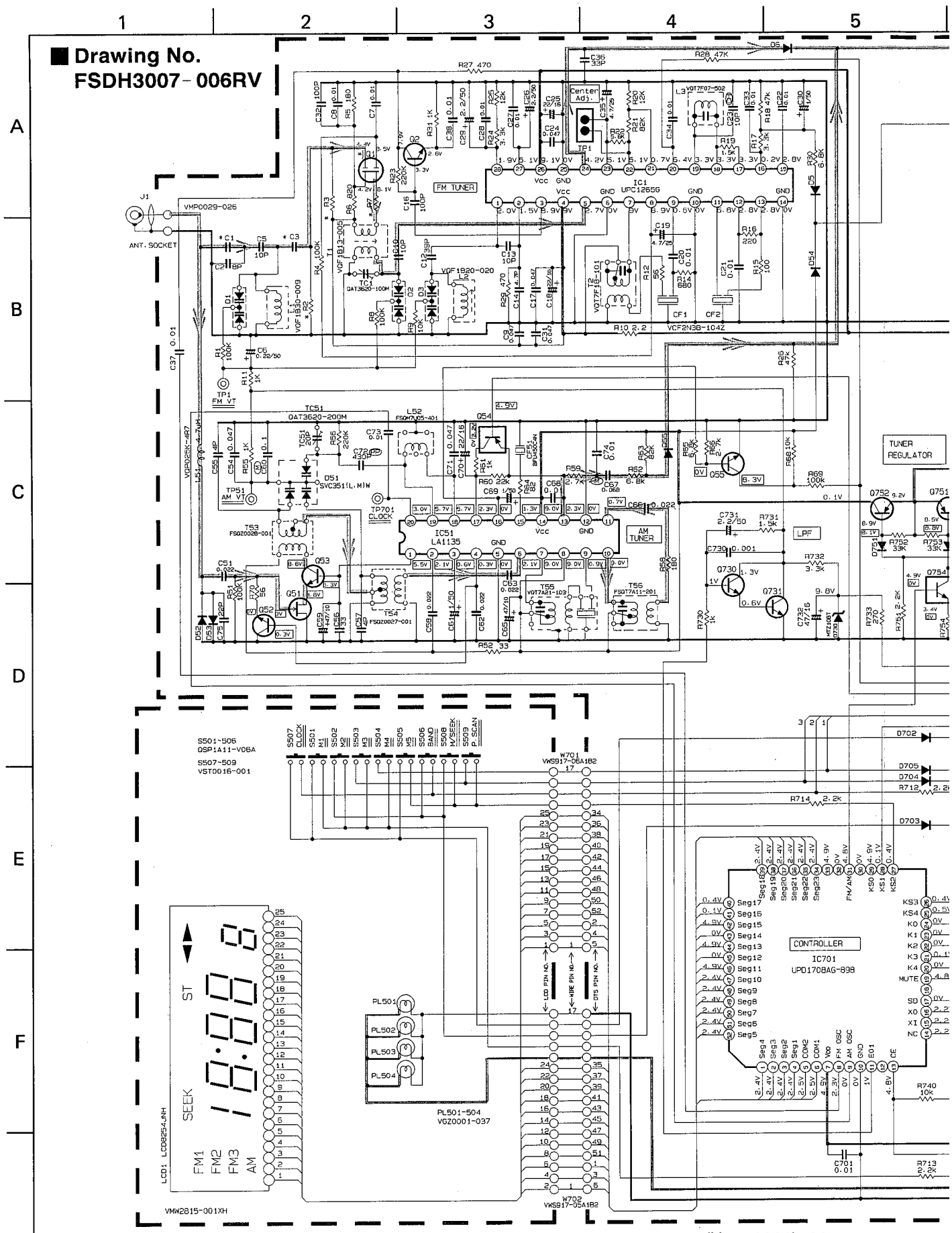

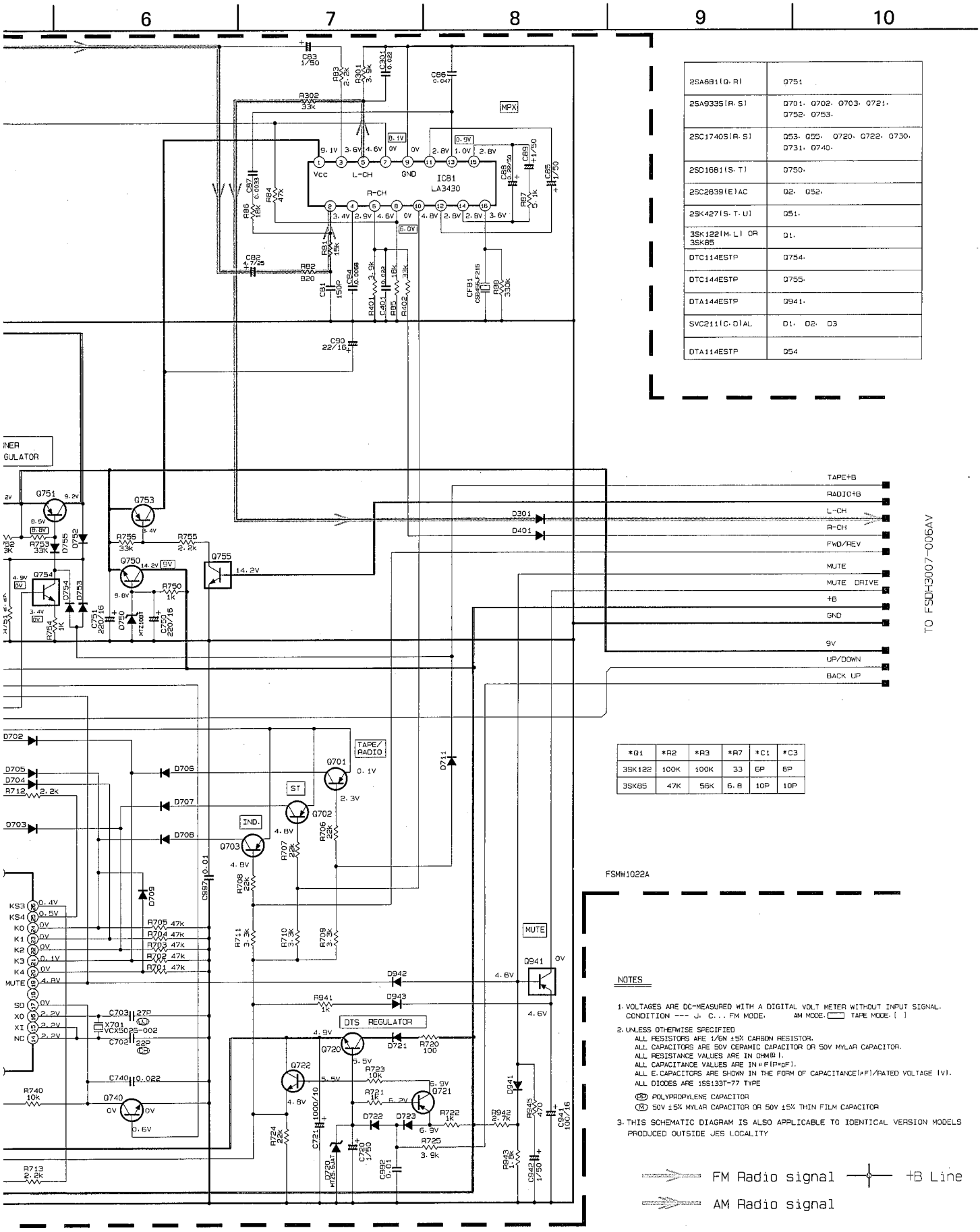

2SA681(Q, R)	Q751
2SA933S(R, S)	Q701, Q702, Q703, Q721, Q752, Q753,
2SC1740S(R, S)	Q53, Q55, Q720, Q722, Q730, Q731, Q740,
2SD1681(S, T)	Q750,
2SC2839(E)AC	Q2, Q52,
2SK427(S, T, U)	Q51,
3SK122(M, L) OR 3SK85	Q1,
DTC114ESTP	Q754,
DTC144ESTP	Q755,
DTA144ESTP	Q941,
SVC211(C, D)AL	D1, D2, D3
DTA114ESTP	Q54

*Q1	*R2	*R3	*R7	*C1	*C3
3SK122	100K	100K	33	6P	6P
3SK85	47K	56K	6.8	10P	10P

Fig. 9-1

■ Drawing No. FSD3007-006AV

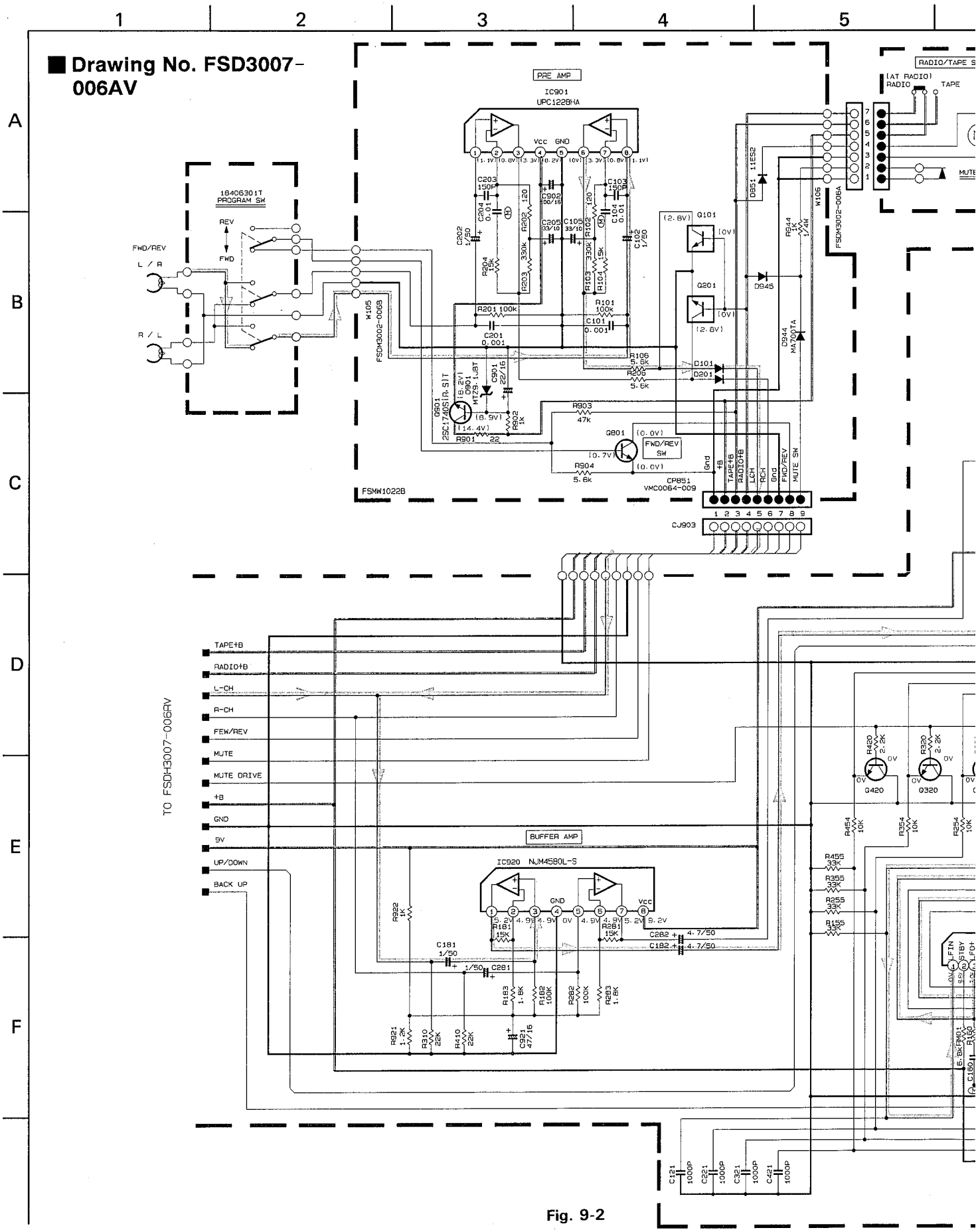

Fig. 9-2

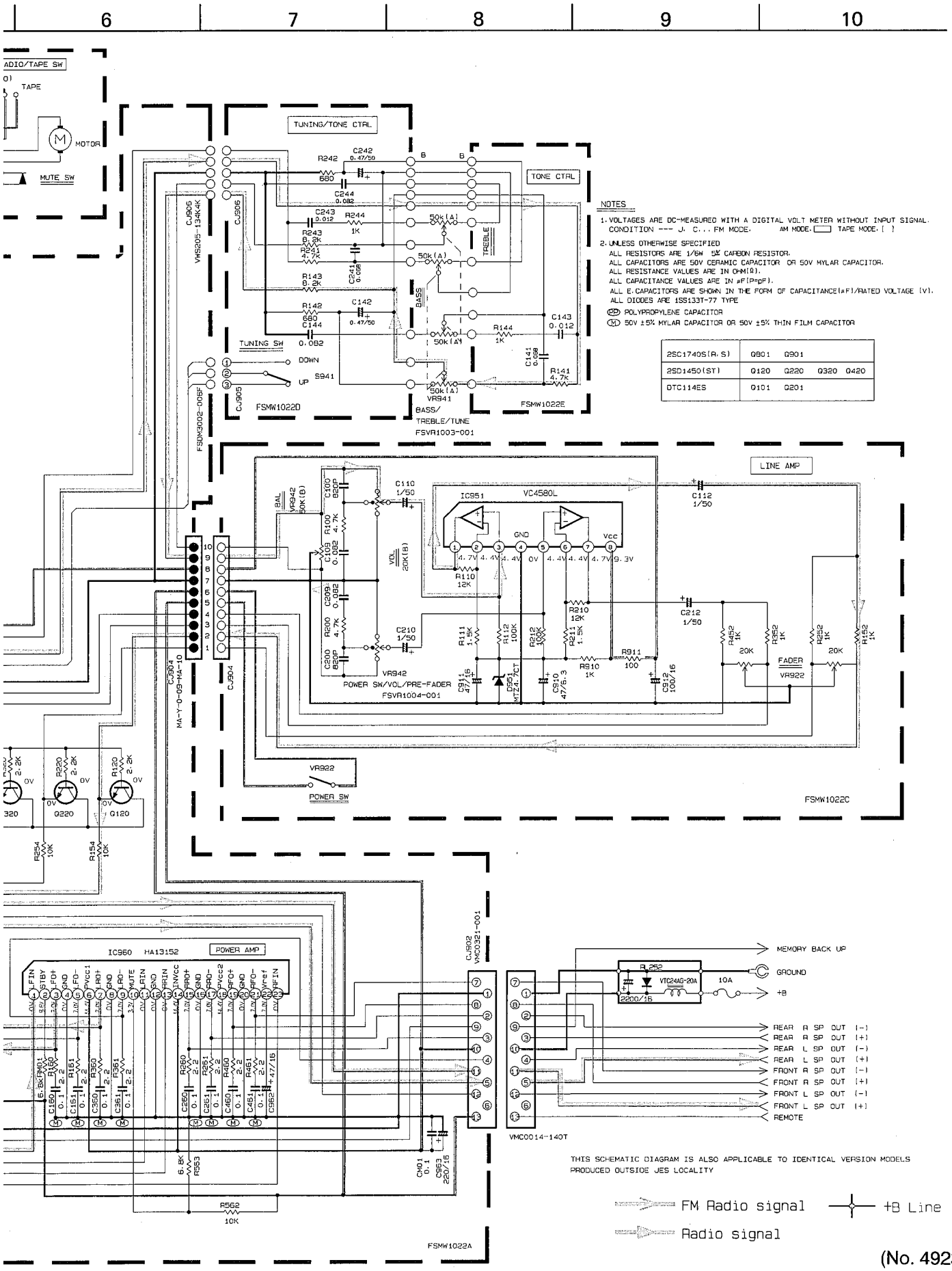

NOTES

1. VOLTAGES ARE DC-MEASURED WITH A DIGITAL VOLT METER WITHOUT INPUT SIGNAL.
   CONDITION --- J. C... FM MODE. AM MODE. [ ] TAPE MODE. [ ]
2. UNLESS OTHERWISE SPECIFIED
   ALL RESISTORS ARE 1/6W 5% CARBON RESISTOR.
   ALL CAPACITORS ARE 50V CERAMIC CAPACITOR OR 50V MYLAR CAPACITOR.
   ALL RESISTANCE VALUES ARE IN Ω-M(Ω).
   ALL CAPACITANCE VALUES ARE IN μF(P=pF).
   ALL E.CAPACITORS ARE SHOWN IN THE FORM OF CAPACITANCE(μF)/RATED VOLTAGE (V).
   ALL DIODES ARE 1SS133T-77 TYPE
   (PP) POLYPROPYLENE CAPACITOR
   (M) 50V ±5% MYLAR CAPACITOR OR 50V ±5% THIN FILM CAPACITOR

2SC1740S(A.S)	Q801	Q901		
2SD1450(ST)	Q120	Q220	Q320	Q420
DTC114ES	Q101	Q201		

THIS SCHEMATIC DIAGRAM IS ALSO APPLICABLE TO IDENTICAL VERSION MODELS PRODUCED OUTSIDE JES LOCALITY

10. IC Block Diargram

■ IC701: PD1708AG-898 (Controller)

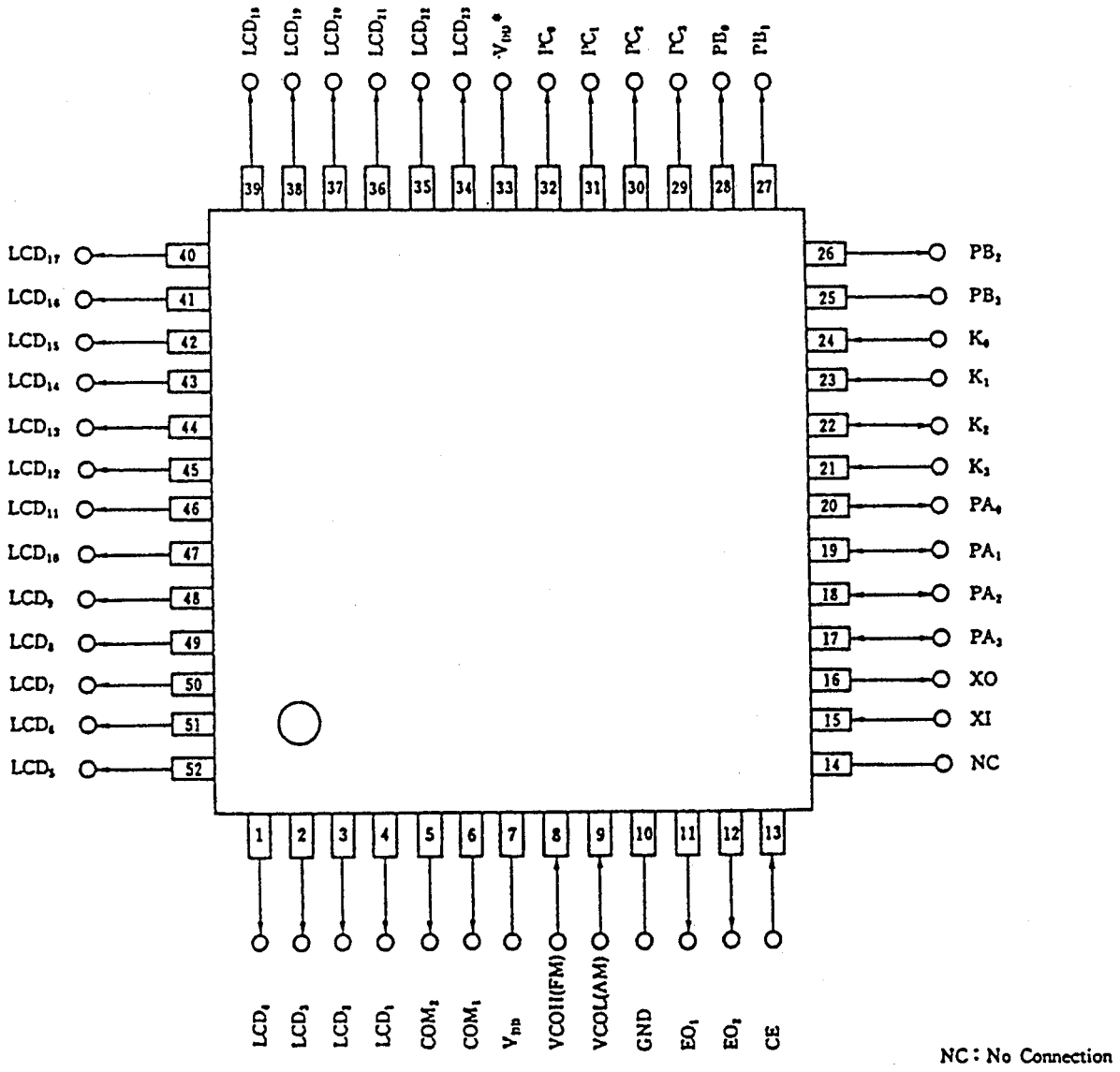

Fig. 10-1 (Top View)

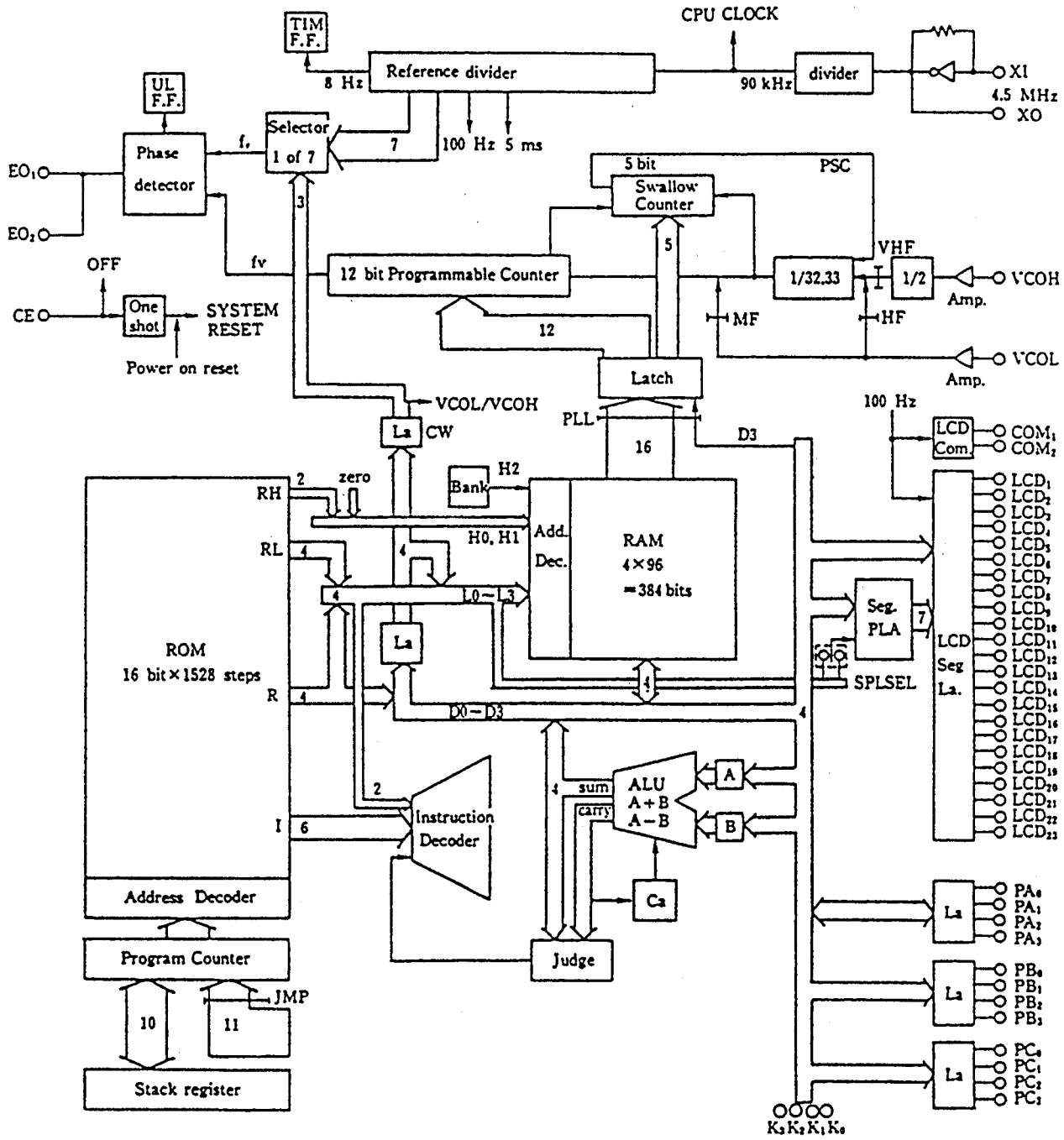
TIM F.F.
CPU CLOCK
Reference divider
8 Hz
90 kHz
divider
XI
4.5 MHz
XO
UL F.F.
Selector 1 of 7
7
100 Hz 5 ms
Phase detector
EO1
EO2
f,
fv
5 bit
PSC
Swallow Counter
5
VHF
12 bit Programmable Counter
1/32.33
1/2
VCOH
Amp.
OFF
CE
One shot
SYSTEM RESET
Power on reset
12
MF
HF
VCOL
Amp.
Latch
VCOL/VCOH
La
CW
PLL
16
D3
100 Hz
LCD Com.
COM1
COM2
RH
2
zero
Bank
H2
H0, H1
Add. Dec.
RAM 4×96 =384 bits
RL
4
L0–L3
Seg. PLA
7
LCD Seg La.
ROM 16 bit×1528 steps
R
D0–D3
SPLSEL
I
6
Instruction Decoder
sum
carry
ALU A+B A−B
A
B
Ca
Address Decoder
Program Counter
Judge
JMP
10
11
Stack register
PA0
PA1
PA2
PA3
PB0
PB1
PB2
PB3
PC0
PC1
PC2
PC3
K3K2K1K0

Fig. 10-2

■ IC701 MPD1708AG – 898

Terminal No.	Symbol	Designation	Description	Output form
34~52 1~4	LCD_{23} ~ LCD_5 LCD_4 ~ LCD_1	LCD Segment Outputs	These are segment signal output terminals to the LCD panel. 46 dots can be displayed in maximum based on the matrixes with COM_1 and COM_2. By executing LCDD command, signals will be output to these terminals. The contents of optional address memory in the data memory (RAM) specified by the first operand section of LCDD command will be output to a digit of LCD matrix specified by the second operand section. When an even number of digit is specified at this time, the contents of data memory specified by the first operand section will be output to these terminals through a segment PLA (programmable logic array). 32 kinds of patterns can be generated by the segment PLA. **Note**: During power supply making (V_{DD} = Low → High) and execution of CKSTP command, the "Low" level (display OFF mode) will be output automatically.	COMS push-pull
5, 6	COM_2 COM_1	LCD Common Output	These are common signal output terminals to the LCD panel. 46 dots can be displayed in maximum based on the matrixes with LCD1~LCD23. Three values of GND, $1/2V_{DD}$ and V_{DD} (5 msec. interval) will be output at a period of 50 Hz. The segment wherein a potential difference of $\pm V_{DD}$ has occurred between these terminals and LCD_1~LCD_{23} will be turned on. **Note**: During power supply making (V_{DD} = Low-High) and execution of CKSTP command, the "Low" level (display OFF mode) will be output automatically.	COMS push-pull
7, 33	V_{DD}	Power Supply	This is a power supply terminal to the device. When the device is in action, 5 V ± 10% will be supplied to it. When storing internal data memory (RAM) (during execution of CKSTP command), the voltage can be lowered to 2.5 V. When 0 → 4.5 V has been supplied to this terminal, the device will be reset and the program be started from "0" address. **Note**: Since 7 PIN and 33 PIN are connected inside chips, there is no need to supply any voltage to both of the pins. When voltage is supplied to one of the pins, both of them will act. However, be careful since the 33 PIN is not connected in the case of the ES parts (ceramic package).	
8	VCOH (FM)	Local Oscillation Signal Input	This is a local oscillation output (VCO output) terminal from 10 to 150 MHz (0.5 V_{p-p} min.). Provided in this terminal are 1/2 fixed division prescaler, 1/32 and 1/33 two modulus division prescalers. Therefore, it is necessary to determine the division value of programmable divider from half the frequency of the local oscillator output (VCO output). When the HF command has been executed based on the direct division and pulse swallow systems, namely, when the VCOL terminal has been selected, then the VCOH terminal will be placed automatically into "pull-down" state (GND). Since an AC amplifier is built in, the input should be made after condenser cutting.	Input

<table>
<tr><th>Terminal No.</th><th>Symbol</th><th>Designation</th><th>Description</th><th>Output form</th></tr>
<tr><td>9</td><td>VCOL (AM)</td><td>Local Oscillation Signal Input</td><td>A local oscillation input (VCO output) from 0.6 to 60 MHz (0.3 V_{p-p} MIN.) will be input to this terminal.
This terminal will be selected and become active when the HF command has been executed based on the direct division and pulse swallow systems. However, be careful since the upper limit of frequency and lower limit of division ratio which can be input vary between the above two division systems.
<table>
<tr><th>Division system</th><th>Input voltage (min.)</th><th>Input frequency</th><th>Division ratio</th></tr>
<tr><td>Direct division</td><td>0.1 V_{p-p}</td><td>0.59 ~ 20 MHz</td><td>16 ~ (2^{12} – 1)</td></tr>
<tr><td>Pulse swallow (HF command execution)</td><td>0.1 V_{p-p}</td><td>0.6 ~ 40 MHz</td><td rowspan="2">1024 ~ (2^{17} – 1)</td></tr>
<tr><td></td><td>0.3 V_{p-p}</td><td>0.6 ~ 50 MHz</td></tr>
</table>
When the VHF command has been selected based on the pulse swallow system, namely, when the VCOH terminal has been selected, then the VCOL terminal will be placed automatically into pull-down state (GND).
Since an AC amplifier is built in, the input should be made after condenser cutting.</td><td>Input</td></tr>
<tr><td>10</td><td>GND</td><td>Ground</td><td>This is a ground terminala of the device.</td><td></td></tr>
<tr><td>11, 12</td><td>EO_1
EO_2</td><td>Error Outputs</td><td>These are PLL error output terminals. When the divided local oscilloation frequency (VCO output) is higher or lower than the reference frequency, the “High” or “Low” level will be output from these terminals. When the frequency complies with the reference frequency, the terminals will be floating.

These error outputs will be input to the external LPF (low pass filter) and applied to varactor diode through the LPF. Meanwhile, since EO_1 and EO_2 are output in a same waveform, either of the terminals can be selected optionally.</td><td>COMS 3 states</td></tr>
<tr><td>13</td><td>CE</td><td>Chip Enable</td><td>This is a device selection signal input terminal. Set this terminal to “High” level to let the device perform normal action and to “Low” level when the device is not used. While this terminal is kept at “Low” level, the PLL will be under Disable state. However, 134 μsec. or shorter input will not be accepted.
In case the CKSTP command has been executed when the CKSTP command is bein used in program and the CE terminal is at “Low” level (The SKSTP command is effective only where “CE = Low”, and acts similarly as in the case of NOP command where “CE = Low”), then the internal clock generator and CPU will be placed into standstill, and the memory can be protected at low consumption current (10 μA or less). At this time, the display outputs (LCD_1 ~ LCD_{23} and COM_1 ~ COM_2) will be placed automatically into display OFF mode (“Low level).
Input
When the CE terminal has been selected from “Low” level to “High” level, the device will be reset and the program start from “0” address.
At this time, moreover, the I/O port (Port A) will be set to the input mode.</td><td>input</td></tr>
</table>

Terminal No.	Symbol	Designation	Description	Output form
14	NC	No-Connection	It is impossible to use this terminal since it is not connected to an internal chip. However, there will be no problem if this terminal is connected freely to OPEN, GND, V_{DD} and so forth.	
15, 16	XI XO	X'tal	This is a crystal oscillator connection terminal, and used for connecting 4.5 MHz crystal. The oscillation frequency (4.5 MHz) should be adjusted while observing the XO terminal.	Input CMOS
17~20	PA_3 ~ PA_0	Port A	This port is a 4 bit L/O (input/output) port. With this port, it is possible to specify input and output every 1 bit according to the contents of 1FM address in data memory (RAM) called "PAIO" word (Refer to Notes 1 and 2).	CMOS push-pull
21~24	K_3 ~ K_0	Key Return Signal Inputs	This are a 4 bit input port and used normally as a key matrix input port. When the KIN or KI command has been executed, the status of this terminal will be read in the data memory (RAM) specified by the corresponding operand section. Meanwhile, this is of such a special configuration as to enable use of higher 2 bits (PC_3 and PC_2) of Ports B and C as key return signal sources.	Input
25~28	PB_3 ~ PB_0	Port B	This is a 4 bit output port, and used as a aport for key return signal source of key matrix since the sink current is made smaller particularly in view of its configuration. In other words, when this port is used as a key return signal source, the external diode can be omitted.In case this port is used as a normal output port, the sink current will become too small depending on the driving circuit. Therefore, a correct low level would not be output in some cases. In such a case, connect the pull-down resistor to this port (Refer to Notes 1 and 3).	CMOS push-pull
29~32	PC_3 ~ PC_0	Port C	This is a 4 bit output port. The absorption current in PC_3 and PC_2 among 4 bits is made particularly small in view of configuration similarly as in the case of Port B above. Therefore, this port is used as a key return signal sosurce of key matrix (Refer to Notes 1 and 3).	COMS push-pull

Note 1. In the port control commands (IN, OUT, SPB, RPB and other commands), PA_1 and PA_2 correspond respectively to the lowest and highest bits of resistor or operand data, and so in the case of Ports B and C.

Note 2. When the device has been reset (V_{DD} = Low → High and CE = Low → High) and when the CKSTP command has been executed, then the Port A (I/O port) will be set to input mode.

Note 3. Since instable data will be output to the special output ports (Ports B and C) during power supply making (V_{DD} = Low → High), it is necessary to initialize the ports with program. Moreover, when the CE terminal is "Low" → "High" and during execution of the CKSTP command, the contents of the output data will not be changed from those of the previous data. In this case, therefore, it is necessary to initialize the ports with program as required

11. Wiring Connections

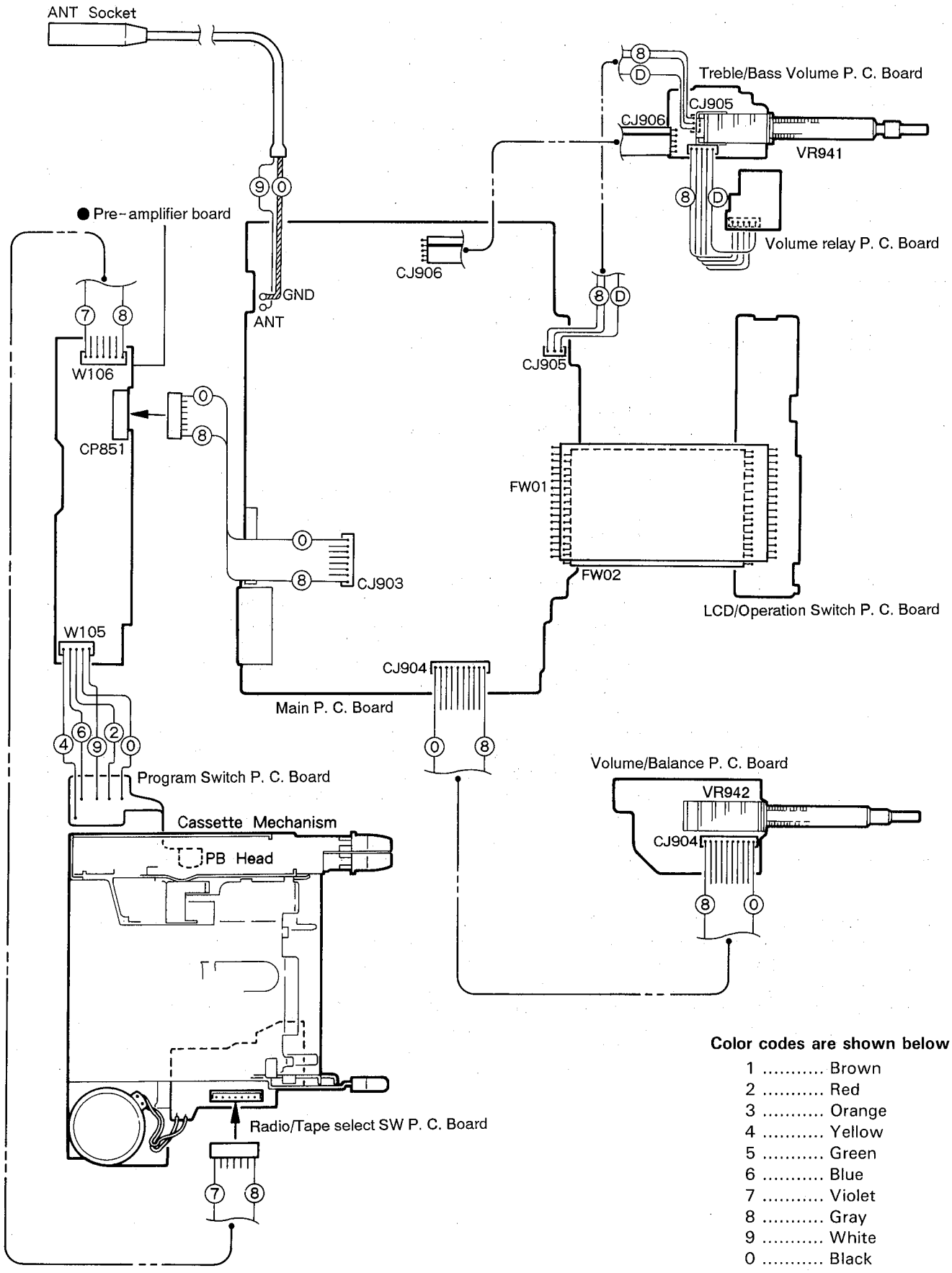

Color codes are shown below.

1 ..... Brown
2 ..... Red
3 ..... Orange
4 ..... Yellow
5 ..... Green
6 ..... Blue
7 ..... Violet
8 ..... Gray
9 ..... White
0 ..... Black
D ..... Pink
C ..... Light Blue

Fig. 11-1

12. Electrical Parts List

BLOCK NO. 01

⚠	REF.	PARTS NO.	PARTS NAME	REMARKS	SUFFIX
	C 1	QCS31HJ-6R0Z	C.CAPACITOR	6.0PF 5% 50V	
	C 2	QCS31HJ-8R0Z	C.CAPACITOR	8.0PF 5% 50V	
	C 3	QCS31HJ-6R0Z	C.CAPACITOR	6.0PF 5% 50V	
	C 5	QCS11HJ-100	C.CAPACITOR	10PF 5% 50V	
	C 6	QETC1HM-224Z	E.CAPACITOR	.22MF 20% 50V	
	C 7	QCVB1CM-103Y	C.CAPACITOR	.010MF 20% 16V	
	C 8	QCVB1CM-103Y	C.CAPACITOR	.010MF 20% 16V	
	C 9	QCC11EK-473ZV	C CAPACITOR	.047MF 10% 25V	
	C 10	QCS11HJ-100	C.CAPACITOR	10PF 5% 50V	
	C 12	QCSB1HJ-390Y	C.CAPACITOR	39PF 5% 50V	
	C 13	QCS11HJ-100	C.CAPACITOR	10PF 5% 50V	
	C 14	QCSB1HK-4R7Y	C.CAPACITOR	4.7PF 10% 50V	
	C 16	QCBB1HK-101Y	C.CAPACITOR	100PF 10% 50V	
	C 17	QCC11EM-473V	C.CAPACITOR	.047MF 20% 25V	
	C 18	QERF1CM-226ZM	E.CAPACITOR	22MF 20% 16V	
	C 19	QETC1EM-475ZM	E.CAPACITOR	4.7MF 20% 25V	
	C 20	QCVB1CM-103Y	C.CAPACITOR	.010MF 20% 16V	
	C 21	QCVB1CM-103Y	C.CAPACITOR	.010MF 20% 16V	
	C 22	QCVB1CM-103Y	C.CAPACITOR	.010MF 20% 16V	
	C 23	QCT30UJ-100Y	C.CAPACITOR	10PF 5% 50V	
	C 24	QCC11EK-473ZV	C CAPACITOR	.047MF 10% 25V	
	C 25	QERF1CM-226ZM	E.CAPACITOR	22MF 20% 16V	
	C 26	QER41HM-225	E.CAPACITOR	2.2MF 20% 50V	
	C 27	QCVB1CM-103Y	C.CAPACITOR	.010MF 20% 16V	
	C 28	QCVB1CM-103Y	C.CAPACITOR	.010MF 20% 16V	
	C 29	QER41HM-225	E.CAPACITOR	2.2MF 20% 50V	
	C 30	QETC1HM-105Z	E.CAPACITOR	1.0MF 20% 50V	
	C 31	QCC11EK-473ZV	C CAPACITOR	.047MF 10% 25V	
	C 32	QCBB1HK-101Y	C.CAPACITOR	100PF 10% 50V	
	C 33	QCVB1CM-103Y	C.CAPACITOR	.010MF 20% 16V	
	C 34	QCVB1CM-103Y	C.CAPACITOR	.010MF 20% 16V	
	C 35	QEKF1EM-475ZN	E.CAPACITOR	4.7MF 20% 25V	
	C 36	QCS11HJ-330	C.CAPACITOR	33PF 5% 50V	
	C 37	QCVB1CM-103Y	C.CAPACITOR	.010MF 20% 16V	
	C 38	QCVB1CM-103Y	C.CAPACITOR	.010MF 20% 16V	
	C 51	QCC11EM-223V	C CAPACITOR	.022MF 10% 25V	
	C 54	QCC11EK-473ZV	C CAPACITOR	.047MF 10% 25V	
	C 55	QCS31HJ-4R0Z	C.CAPACITOR	4.0PF 5% 50V	
	C 56	QCS11HJ-330	C.CAPACITOR	33PF 5% 50V	
	C 57	QCS31HJ-4R0Z	C.CAPACITOR	4.0PF 5% 50V	
	C 58	QCC11EM-223V	C CAPACITOR	.022MF 10% 25V	
	C 59	QETC1AM-476Z	E.CAPACITOR	47MF 20% 10V	
	C 60	QFV41HJ-104ZM	TF CAPACITOR	.10MF 5% 50V	
	C 61	QETC1HM-105Z	E.CAPACITOR	1.0MF 20% 50V	
	C 62	QCC11EM-223V	C CAPACITOR	.022MF 10% 25V	
	C 63	QCC11EM-223V	C CAPACITOR	.022MF 10% 25V	
	C 65	QETC1AM-476Z	E.CAPACITOR	47MF 20% 10V	
	C 66	QCC11EM-223V	C CAPACITOR	.022MF 10% 25V	
	C 67	QFV41HJ-683Z	TF CAPACITOR	.068MF 5% 50V	
	C 68	QCVB1CM-103Y	C.CAPACITOR	.010MF 20% 16V	
	C 69	QER41HM-105VM	E.CAPACITOR	1.0MF 20% 50V	
	C 70	QERF1CM-226ZM	E.CAPACITOR	22MF 20% 16V	
	C 71	QCC11EM-473V	C CAPACITOR	.047MF 20% 25V	
	C 72	QFP42AJ-431	PP CAPACITOR	430PF 5% 100V	
	C 73	QCVB1CM-103Y	C.CAPACITOR	.010MF 20% 16V	

BLOCK NO. 01

⚠	REF.	PARTS NO.	PARTS NAME	REMARKS	SUFFIX
	C 74	QCVB1CM-103Y	C.CAPACITOR	.010MF 20% 16V	
	C 75	QCSB1HJ-220Y	C.CAPACITOR	22PF 5% 50V	
	C 81	QCBB1HK-151Y	C.CAPACITOR	150PF 10% 50V	
	C 82	QER41EM-475VM	E.CAPACITOR	4.7MF 20% 25V	
	C 83	QER41HM-105VM	E.CAPACITOR	1.0MF 20% 50V	
	C 84	QCXB1CM-682Y	C.CAPACITOR	6800PF 20% 16V	
	C 85	QER41HM-105VM	E.CAPACITOR	1.0MF 20% 50V	
	C 86	QCC11EM-473V	C CAPACITOR	.047MF 20% 25V	
	C 87	QCXB1CM-332Y	C.CAPACITOR	3300PF 20% 16V	
	C 88	QERF1HM-224Z	E.CAPACITOR	.22MF 20% 50V	
	C 89	QER41HM-105VM	E.CAPACITOR	1.0MF 20% 50V	
	C 90	QERF1CM-226ZM	E.CAPACITOR	22MF 20% 16V	
	C 100	QCBB1HK-821Y	C.CAPACITOR	820PF 10% 50V	
	C 101	QCBB1HK-102Y	C.CAPACITOR	1000PF 10% 50V	
	C 102	QEKF1HM-105ZM	E.CAPACITOR	1.0MF 20% 50V	
	C 103	QCBB1HK-151Y	C.CAPACITOR	150PF 10% 50V	
	C 104	QFV41HJ-103ZM	TF CAPACITOR	.010MF 5% 50V	
	C 105	QEKF1AM-336ZN	E.CAPACITOR	33MF 20% 10V	
	C 109	QCC11EK-823ZV	C CAPACITOR	.082MF 10% 25V	
	C 110	QEKF1HM-105ZM	E.CAPACITOR	1.0MF 20% 50V	
	C 112	QEKF1HM-105ZM	E.CAPACITOR	1.0MF 20% 50V	
	C 121	QCBB1HK-102Y	C.CAPACITOR	1000PF 10% 50V	
	C 141	QCC11EM-683V	C CAPACITOR	.068MF 10% 25V	
	C 142	QEKF1HM-474Z	E.CAPACITOR	.47MF 20% 50V	
	C 143	QCC11EK-123Z	C CAPACITOR	.012MF 10% 25V	
	C 144	QCC11EK-823ZV	C CAPACITOR	.082MF 10% 25V	
	C 160	QFV41HJ-104ZM	TF CAPACITOR	.10MF 5% 50V	
	C 161	QFV41HJ-104ZM	TF CAPACITOR	.10MF 5% 50V	
	C 181	QEKF1HM-105ZM	E.CAPACITOR	1.0MF 20% 50V	
	C 182	QETC1HM-475Z	E.CAPACITOR	4.7MF 20% 50V	
	C 200	QCBB1HK-821Y	C.CAPACITOR	820PF 10% 50V	
	C 201	QCBB1HK-102Y	C.CAPACITOR	1000PF 10% 50V	
	C 202	QEKF1HM-105ZM	E.CAPACITOR	1.0MF 20% 50V	
	C 203	QCBB1HK-151Y	C.CAPACITOR	150PF 10% 50V	
	C 204	QFV41HJ-103ZM	TF CAPACITOR	.010MF 5% 50V	
	C 205	QEKF1AM-336ZN	E.CAPACITOR	33MF 20% 10V	
	C 209	QCC11EK-823ZV	C CAPACITOR	.082MF 10% 25V	
	C 210	QEKF1HM-105ZM	E.CAPACITOR	1.0MF 20% 50V	
	C 212	QEKF1HM-105ZM	E.CAPACITOR	1.0MF 20% 50V	
	C 221	QCBB1HK-102Y	C.CAPACITOR	1000PF 10% 50V	
	C 241	QCC11EM-683V	C CAPACITOR	.068MF 10% 25V	
	C 242	QEKF1HM-474Z	E.CAPACITOR	.47MF 20% 50V	
	C 243	QCC11EK-123Z	C CAPACITOR	.012MF 10% 25V	
	C 244	QCC11EK-823ZV	C CAPACITOR	.082MF 10% 25V	
	C 260	QFV41HJ-104ZM	TF CAPACITOR	.10MF 5% 50V	
	C 261	QFV41HJ-104ZM	TF CAPACITOR	.10MF 5% 50V	
	C 281	QEKF1HM-105ZM	E.CAPACITOR	1.0MF 20% 50V	
	C 282	QETC1HM-475Z	E.CAPACITOR	4.7MF 20% 50V	
	C 301	QCC11EM-223V	C CAPACITOR	.022MF 20% 25V	
	C 321	QCBB1HK-102Y	C.CAPACITOR	1000PF 10% 50V	
	C 360	QFV41HJ-104ZM	TF CAPACITOR	.10MF 5% 50V	
	C 361	QFV41HJ-104ZM	TF CAPACITOR	.10MF 5% 50V	
	C 401	QCC11EM-223V	C CAPACITOR	.022MF 20% 25V	
	C 421	QCBB1HK-102Y	C.CAPACITOR	1000PF 10% 50V	
	C 460	QFV41HJ-104ZM	TF CAPACITOR	.10MF 5% 50V	

BLOCK NO. 01

⚠	REF.	PARTS NO.	PARTS NAME	REMARKS	SUFFIX
	C 461	QFV41HJ-104ZM	TF CAPACITOR	.10MF 5% 50V	
	C 701	QCVB1CM-103Y	C.CAPACITOR	.010MF 20% 16V	
	C 702	QCSB1HJ-220Y	C.CAPACITOR	22PF 5% 50V	
	C 703	QCT05CH-220	C.CAPACITOR	22PF 5% 50V	
	C 704	QCT30CH-3R9Y	C.CAPACITOR	3.9PF 5% 50V	
	C 720	QETC1HM-105Z	E.CAPACITOR	1.0MF 20% 50V	
	C 721	QETC1AM-108ZN	E.CAPACITOR	1000MF 20% 10V	
	C 730	QCBB1HK-102Y	C.CAPACITOR	1000PF 10% 50V	
	C 731	QER41HM-225	E.CAPACITOR	2.2MF 20% 50V	
	C 732	QER41CM-476M	E.CAPACITOR	47MF 20% 16V	
	C 740	QCC11EM-223V	C CAPACITOR	.022MF 10% 25V	
	C 750	QERF1AM-227Z	E.CAPACITOR	220MF 20% 10V	
	C 751	QETN1CM-227Z	E.CAPACITOR	220MF 20% 16V	
	C 901	QEKF1CM-226ZM	E.CAPACITOR	22MF 20% 16V	
	C 902	QEKF1CM-107ZN	E.CAPACITOR	100MF 20% 16V	
	C 911	QEK41CM-476	E.CAPACITOR	47MF 20% 16V	
	C 912	QEKF1CM-107ZN	E.CAPACITOR	100MF 20% 16V	
	C 921	QETC1CM-476Z	E.CAPACITOR	47MF 20% 16V	
	C 941	QETC1CM-107	E.CAPACITOR	100MF 20% 16V	
	C 942	QETC1HM-105Z	E.CAPACITOR	1.0MF 20% 50V	
	C 961	QEKF1CM-226ZM	E.CAPACITOR	22MF 20% 16V	
	C 962	QEKF1CM-106Z	E.CAPACITOR	10MF 20% 16V	
	C 963	QETB1CM-477M	E.CAPACITOR	470MF 20% 16V	
	C 992	QCVB1CM-103Y	C.CAPACITOR	.010MF 20% 16V	
	C 997	QCVB1CM-103Y	C.CAPACITOR	.010MF 20% 16V	
	CF 1	VCF2N3B-104Z	C.FILTER		
	CF 2	VCF2N3B-104Z	C.FILTER		
	CF 51	BFU450C4N	C.FILTER		
	CF 81	CSB456F11	CERA LOCK		
	CJ902	VMC0321-001	FEED THU CONN		
	CP851	VMC0064-009	CONNECTOR		
	D 1	SVC211(C,D)	V.C.DIODE I/M		
	D 2	SVC211(C,D)	V.C.DIODE I/M		
	D 3	SVC211(C,D)	V.C.DIODE I/M		
	D 5	1SS133	DIODE I/M		
	D 6	1SS133	DIODE I/M		
	D 51	SVC351(L,M)W	V.C.DIODE		
	D 52	1SS133	DIODE I/M		
	D 53	1SS133	DIODE I/M		
	D 54	1SS133	DIODE I/M		
	D 55	1SS133	DIODE I/M		
	D 101	1SS133	DIODE I/M		
	D 201	1SS133	DIODE I/M		
	D 301	1SS133	DIODE I/M		
	D 401	1SS133	DIODE I/M		
	D 702	1SS133	DIODE I/M		
	D 703	1SS133	DIODE I/M		
	D 704	1SS133	DIODE I/M		
	D 705	1SS133	DIODE I/M		
	D 706	1SS133	DIODE I/M		
	D 707	1SS133	DIODE I/M		
	D 708	1SS133	DIODE I/M		
	D 709	1SS133	DIODE I/M		
	D 711	1SS133	DIODE I/M		
	D 720	MTZ5.6JA	DIODE I/M		

BLOCK NO. 01

⚠	REF.	PARTS NO.	PARTS NAME	REMARKS	SUFFIX
	D 721	1SS133	DIODE I/M		
	D 722	1SS133	DIODE I/M		
	D 723	1SS133	DIODE I/M		
	D 730	MTZ10B	Z DIODE		
	D 750	MTZ10B	Z DIODE		
	D 751	1SS133	DIODE I/M		
	D 752	1SS133	DIODE I/M		
	D 753	1SS133	DIODE I/M		
	D 754	1SS133	DIODE I/M		
	D 755	1SS133	DIODE I/M		
	D 851	DSK10C-E	SI DIODE		
	D 901	MTZ9.1JB	Z DIODE		
	D 911	MTZ4.7C	Z DIODE		
	D 941	1SS133	DIODE I/M		
	D 942	1SS133	DIODE I/M		
	D 943	1SS133	DIODE I/M		
	D 944	MA700A	DIODE I/M		
	D 945	1SS133	DIODE I/M		
	FW 01	VWS917-06A1B2	FLAT WIRE		
	FW 02	VWS917-05A1B2	PC JOINER WIRE		
	IC 1	UPC1265G	I.C.		
	IC 51	LA1135	I.C.		
	IC 81	LA3430	I.C.		
	IC701	UPD1708AG-898	I.C.		
	IC901	UPC1228HA	I.C.		
	IC920	NJM4580L-S	I.C		
	IC951	NJM4580L-S	I.C		
	IC960	HA13152	IC		
	L 1	VQF1B30-009	COIL		
	L 2	VQF1B20-020	COIL		
	L 3	VQT7F07-502	I.F.T.		
	L 51	VQP025K-4R7Y	INDUCTOR I/M		
	L 52	VQM7U05-401S	OSC COIL (MW)		
	Q 1	3SK85TF4	FET		
	Q 2	2SC2839	TRANSISTOR I/M		
	Q 51	2SK427	FET I/M		
	Q 52	2SC2839	TRANSISTOR I/M		
	Q 53	2SC1740S(R,S)	TRANSISTOR I/M		
	Q 54	2SA933S(RS)	TRANSISTOR I/M		
	Q 55	2SC1740S(R,S)	TRANSISTOR I/M		
	Q 101	DTC114ES	TRANSISTOR I/M		
	Q 120	2SD1450RST	TRANSISTOR I.M		
	Q 201	DTC114ES	TRANSISTOR I/M		
	Q 220	2SD1450RST	TRANSISTOR I.M		
	Q 320	2SD1450RST	TRANSISTOR I.M		
	Q 420	2SD1450RST	TRANSISTOR I.M		
	Q 701	2SA933S(RS)	TRANSISTOR I/M		
	Q 702	2SA933S(RS)	TRANSISTOR I/M		
	Q 703	2SA933S(RS)	TRANSISTOR I/M		
	Q 720	2SC1740S(R,S)	TRANSISTOR I/M		
	Q 721	2SA933S(RS)	TRANSISTOR I/M		
	Q 722	2SC1740S(R,S)	TRANSISTOR I/M		
	Q 730	2SC1740S(R,S)	TRANSISTOR I/M		
	Q 731	2SC1740S(R,S)	TRANSISTOR I/M		
	Q 740	2SC1740S(R,S)	TRANSISTOR I/M		

BLOCK NO. 01

⚠	REF.	PARTS NO.	PARTS NAME	REMARKS	SUFFIX
	Q 750	2SD1681(S,T)	TRANSISTOR		
	Q 751	2SA881	TRANSISTOR		
	Q 752	2SA933S(RS)	TRANSISTOR I/M		
	Q 753	2SA933S(RS)	TRANSISTOR I/M		
	Q 754	DTC114ES	TRANSISTOR I/M		
	Q 755	DTC144ES	TRANSISTOR I/M		
	Q 801	2SC1740S(R,S)	TRANSISTOR I/M		
	Q 901	2SC1740S(R,S)	TRANSISTOR I/M		
	Q 941	DTA144ES	TRANSISTOR I/M		
	R 1	QRD161J-104	C.RESISTOR	100K 5% 1/6W	
	R 2	QRD161J-473	C.RESISTOR	47K 5% 1/6W	
	R 3	QRD161J-563	C.RESISTOR	56K 5% 1/6W	
	R 4	QRD161J-104	C.RESISTOR	100K 5% 1/6W	
	R 5	QRD161J-181	C.RESISTOR	180 5% 1/6W	
	R 6	QRD161J-821	C.RESISTOR	820 5% 1/6W	
	R 7	QRD161J-330	C.RESISTOR	33 5% 1/6W	
	R 8	QRD161J-104	C.RESISTOR	100K 5% 1/6W	
	R 9	QRD161J-103	C.RESISTOR	10K 5% 1/6W	
	R 10	QRD161J-2R2	C.RESISTOR	2.2 5% 1/6W	
	R 11	QRD161J-102	C.RESISTOR	1.0K 5% 1/6W	
	R 12	QRD161J-560	C.RESISTOR	56 5% 1/6W	
	R 14	QRD161J-681	C.RESISTOR	680 5% 1/6W	
	R 15	QRD161J-101	C.RESISTOR	100 5% 1/6W	
	R 16	QRD161J-221	C.RESISTOR	220 5% 1/6W	
	R 17	QRD167J-332	C.RESISTOR	3.3K 5% 1/6W	
	R 18	QRD161J-473	C.RESISTOR	47K 5% 1/6W	
	R 19	QRD161J-152	C.RESISTOR	1.5K 5% 1/6W	
	R 20	QRD161J-123	C.RESISTOR	12K 5% 1/6W	
	R 21	QRD161J-823	C.RESISTOR	82K 5% 1/6W	
	R 22	QRD167J-562	C.RESISTOR	5.6K 5% 1/6W	
	R 23	QRD161J-224	C.RESISTOR	220K 5% 1/6W	
	R 24	QRD167J-332	C.RESISTOR	3.3K 5% 1/6W	
	R 25	QRD161J-123	C.RESISTOR	12K 5% 1/6W	
	R 26	QRD161J-473	C.RESISTOR	47K 5% 1/6W	
	R 27	QRD161J-471	C.RESISTOR	470 5% 1/6W	
	R 28	QRD161J-473	C.RESISTOR	47K 5% 1/6W	
	R 29	QRD161J-471	C.RESISTOR	470 5% 1/6W	
	R 30	QRD167J-682	C.RESISTOR	6.8K 5% 1/6W	
	R 31	QRD161J-102	C.RESISTOR	1.0K 5% 1/6W	
	R 51	QRD161J-104	C.RESISTOR	100K 5% 1/6W	
	R 52	QRD161J-330	C.RESISTOR	33 5% 1/6W	
	R 55	QRD161J-102	C.RESISTOR	1.0K 5% 1/6W	
	R 56	QRD161J-224	C.RESISTOR	220K 5% 1/6W	
	R 58	QRD161J-181	C.RESISTOR	180 5% 1/6W	
	R 59	QRD161J-272	C.RESISTOR	2.7K 5% 1/6W	
	R 60	QRD161J-223	C.RESISTOR	22K 5% 1/6W	
	R 61	QRD161J-102	C.RESISTOR	1.0K 5% 1/6W	
	R 62	QRD167J-682	C.RESISTOR	6.8K 5% 1/6W	
	R 63	QRD161J-823	C.RESISTOR	82K 5% 1/6W	
	R 64	QRD161J-820	C.RESISTOR	82 5% 1/6W	
	R 65	QRD167J-682	C.RESISTOR	6.8K 5% 1/6W	
	R 66	QRD161J-272	C.RESISTOR	2.7K 5% 1/6W	
	R 68	QRD161J-103	C.RESISTOR	10K 5% 1/6W	
	R 69	QRD161J-104	C.RESISTOR	100K 5% 1/6W	
	R 70	QRD161J-560	C.RESISTOR	56 5% 1/6W	

BLOCK NO. 01

⚠	REF.	PARTS NO.	PARTS NAME	REMARKS	SUFFIX
	R 81	QRD161J-153	C.RESISTOR	15K 5% 1/6W	
	R 82	QRD161J-821	C.RESISTOR	820 5% 1/6W	
	R 83	QRD161J-222	C.RESISTOR	2.2K 5% 1/6W	
	R 84	QRD161J-473	C.RESISTOR	47K 5% 1/6W	
	R 85	QRD161J-183	C.RESISTOR	18K 5% 1/6W	
	R 86	QRD161J-183	C.RESISTOR	18K 5% 1/6W	
	R 87	QRD161J-512	C.RESISTOR	5.1K 5% 1/6W	
	R 88	QRD161J-334	C.RESISTOR	330K 5% 1/6W	
	R 100	QRD161J-472	C.RESISTOR	4.7K 5% 1/6W	
	R 101	QRD161J-104	C.RESISTOR	100K 5% 1/6W	
	R 102	QRD167J-121	C.RESISTOR	120 5% 1/6W	
	R 103	QRD161J-334	C.RESISTOR	330K 5% 1/6W	
	R 104	QRD161J-153	C.RESISTOR	15K 5% 1/6W	
	R 106	QRD167J-562	C.RESISTOR	5.6K 5% 1/6W	
	R 110	QRD161J-333	C.RESISTOR	33K 5% 1/6W	
	R 111	QRD161J-102	C.RESISTOR	1.0K 5% 1/6W	
	R 112	QRD161J-104	C.RESISTOR	100K 5% 1/6W	
	R 120	QRD161J-222	C.RESISTOR	2.2K 5% 1/6W	
	R 141	QRD161J-472	C.RESISTOR	4.7K 5% 1/6W	
	R 142	QRD161J-681	C.RESISTOR	680 5% 1/6W	
	R 143	QRD161J-822	C.RESISTOR	8.2K 5% 1/6W	
	R 144	QRD161J-102	C.RESISTOR	1.0K 5% 1/6W	
	R 152	QRD161J-102	C.RESISTOR	1.0K 5% 1/6W	
	R 154	QRD161J-103	C.RESISTOR	10K 5% 1/6W	
	R 155	QRD161J-333	C.RESISTOR	33K 5% 1/6W	
	R 160	QRD161J-2R2	C.RESISTOR	2.2 5% 1/6W	
	R 161	QRD161J-2R2	C.RESISTOR	2.2 5% 1/6W	
	R 181	QRD161J-123	C.RESISTOR	12K 5% 1/6W	
	R 182	QRD161J-104	C.RESISTOR	100K 5% 1/6W	
	R 183	QRD161J-152	C.RESISTOR	1.5K 5% 1/6W	
	R 200	QRD161J-472	C.RESISTOR	4.7K 5% 1/6W	
	R 201	QRD161J-104	C.RESISTOR	100K 5% 1/6W	
	R 202	QRD167J-121	C.RESISTOR	120 5% 1/6W	
	R 203	QRD161J-334	C.RESISTOR	330K 5% 1/6W	
	R 204	QRD161J-153	C.RESISTOR	15K 5% 1/6W	
	R 206	QRD167J-562	C.RESISTOR	5.6K 5% 1/6W	
	R 210	QRD161J-333	C.RESISTOR	33K 5% 1/6W	
	R 211	QRD161J-102	C.RESISTOR	1.0K 5% 1/6W	
	R 212	QRD161J-104	C.RESISTOR	100K 5% 1/6W	
	R 220	QRD161J-222	C.RESISTOR	2.2K 5% 1/6W	
	R 241	QRD161J-472	C.RESISTOR	4.7K 5% 1/6W	
	R 242	QRD161J-681	C.RESISTOR	680 5% 1/6W	
	R 243	QRD161J-822	C.RESISTOR	8.2K 5% 1/6W	
	R 244	QRD161J-102	C.RESISTOR	1.0K 5% 1/6W	
	R 252	QRD161J-102	C.RESISTOR	1.0K 5% 1/6W	
	R 254	QRD161J-103	C.RESISTOR	10K 5% 1/6W	
	R 255	QRD161J-333	C.RESISTOR	33K 5% 1/6W	
	R 260	QRD161J-2R2	C.RESISTOR	2.2 5% 1/6W	
	R 261	QRD161J-2R2	C.RESISTOR	2.2 5% 1/6W	
	R 281	QRD161J-123	C.RESISTOR	12K 5% 1/6W	
	R 282	QRD161J-104	C.RESISTOR	100K 5% 1/6W	
	R 283	QRD161J-152	C.RESISTOR	1.5K 5% 1/6W	
	R 301	QRD161J-392	C.RESISTOR	3.9K 5% 1/6W	
	R 302	QRD161J-333	C.RESISTOR	33K 5% 1/6W	
	R 310	QRD161J-223	C.RESISTOR	22K 5% 1/6W	

BLOCK NO. 01

⚠	REF.	PARTS NO.	PARTS NAME	REMARKS	SUFFIX
	R 320	QRD161J-222	C.RESISTOR	2.2K 5% 1/6W	
	R 352	QRD161J-102	C.RESISTOR	1.0K 5% 1/6W	
	R 354	QRD161J-103	C.RESISTOR	10K 5% 1/6W	
	R 355	QRD161J-333	C.RESISTOR	33K 5% 1/6W	
	R 360	QRD161J-2R2	C.RESISTOR	2.2 5% 1/6W	
	R 361	QRD161J-2R2	C.RESISTOR	2.2 5% 1/6W	
	R 401	QRD161J-392	C.RESISTOR	3.9K 5% 1/6W	
	R 402	QRD161J-333	C.RESISTOR	33K 5% 1/6W	
	R 410	QRD161J-223	C.RESISTOR	22K 5% 1/6W	
	R 420	QRD161J-222	C.RESISTOR	2.2K 5% 1/6W	
	R 452	QRD161J-102	C.RESISTOR	1.0K 5% 1/6W	
	R 454	QRD161J-103	C.RESISTOR	10K 5% 1/6W	
	R 455	QRD161J-333	C.RESISTOR	33K 5% 1/6W	
	R 460	QRD161J-2R2	C.RESISTOR	2.2 5% 1/6W	
	R 461	QRD161J-2R2	C.RESISTOR	2.2 5% 1/6W	
	R 562	QRD167J-332	C.RESISTOR	3.3K 5% 1/6W	
	R 563	QRD167J-562	C.RESISTOR	5.6K 5% 1/6W	
	R 701	QRD161J-473	C.RESISTOR	47K 5% 1/6W	
	R 702	QRD161J-473	C.RESISTOR	47K 5% 1/6W	
	R 703	QRD161J-473	C.RESISTOR	47K 5% 1/6W	
	R 704	QRD161J-473	C.RESISTOR	47K 5% 1/6W	
	R 705	QRD161J-473	C.RESISTOR	47K 5% 1/6W	
	R 706	QRD161J-223	C.RESISTOR	22K 5% 1/6W	
	R 707	QRD161J-223	C.RESISTOR	22K 5% 1/6W	
	R 708	QRD161J-223	C.RESISTOR	22K 5% 1/6W	
	R 709	QRD167J-332	C.RESISTOR	3.3K 5% 1/6W	
	R 710	QRD167J-332	C.RESISTOR	3.3K 5% 1/6W	
	R 711	QRD167J-332	C.RESISTOR	3.3K 5% 1/6W	
	R 712	QRD161J-222	C.RESISTOR	2.2K 5% 1/6W	
	R 713	QRD161J-222	C.RESISTOR	2.2K 5% 1/6W	
	R 714	QRD161J-222	C.RESISTOR	2.2K 5% 1/6W	
	R 720	QRD161J-101	C.RESISTOR	100 5% 1/6W	
	R 721	QRD161J-102	C.RESISTOR	1.0K 5% 1/6W	
	R 722	QRD161J-102	C.RESISTOR	1.0K 5% 1/6W	
	R 723	QRD161J-103	C.RESISTOR	10K 5% 1/6W	
	R 724	QRD161J-223	C.RESISTOR	22K 5% 1/6W	
	R 725	QRD161J-392	C.RESISTOR	3.9K 5% 1/6W	
	R 730	QRD161J-102	C.RESISTOR	1.0K 5% 1/6W	
	R 731	QRD161J-152	C.RESISTOR	1.5K 5% 1/6W	
	R 732	QRD167J-332	C.RESISTOR	3.3K 5% 1/6W	
	R 733	QRD161J-271	C.RESISTOR	270 5% 1/6W	
	R 740	QRD161J-103	C.RESISTOR	10K 5% 1/6W	
	R 750	QRD161J-102	C.RESISTOR	1.0K 5% 1/6W	
	R 751	QRD161J-222	C.RESISTOR	2.2K 5% 1/6W	
	R 752	QRD161J-333	C.RESISTOR	33K 5% 1/6W	
	R 753	QRD161J-333	C.RESISTOR	33K 5% 1/6W	
	R 754	QRD161J-102	C.RESISTOR	1.0K 5% 1/6W	
	R 755	QRD161J-222	C.RESISTOR	2.2K 5% 1/6W	
	R 756	QRD161J-333	C.RESISTOR	33K 5% 1/6W	
	R 901	QRD161J-220	C.RESISTOR	22 5% 1/6W	
	R 902	QRD161J-102	C.RESISTOR	1.0K 5% 1/6W	
	R 903	QRD161J-473	C.RESISTOR	47K 5% 1/6W	
	R 904	QRD167J-562	C.RESISTOR	5.6K 5% 1/6W	
	R 910	QRD161J-102	C.RESISTOR	1.0K 5% 1/6W	
	R 911	QRD161J-101	C.RESISTOR	100 5% 1/6W	

BLOCK NO. 01

⚠	REF.	PARTS NO.	PARTS NAME	REMARKS	SUFFIX
	R 921	QRD161J-122	C.RESISTOR	1.2K 5% 1/6W	
	R 922	QRD161J-102	C.RESISTOR	1.0K 5% 1/6W	
	R 941	QRD161J-102	C.RESISTOR	1.0K 5% 1/6W	
	R 942	QRD161J-272	C.RESISTOR	2.7K 5% 1/6W	
	R 943	QRD161J-182	C.RESISTOR	1.8K 5% 1/6W	
	R 944	QRD141J-102S	C.RESISTOR	1.0K 5% 1/4W	
	R 945	QRD161J-471	C.RESISTOR	470 5% 1/6W	
	T 1	VQF1B13-005	IFT		
	T 2	VQT7F18-101	I.F.T.		
	T 53	VQZ0028-001S	ANT COIL		
	T 54	VQZ0027-001S	ANT COIL		
	T 55	VQT7A21-105	I.F.T.		
	T 56	VQT7A11-206S	IFT		
	TC 1	QAT3001-053	T.CAPACITOR		
	TC 51	QAT3620-200M	T.CAPACITOR		
	VR941	VCV1001-017T	V.RESISTOR		
	VR942	FSVR1004-001	SW.VR.BAL.FADER		
	X 701	V472124-A0	CRYSTAL		

BLOCK NO. 02

⚠	REF.	PARTS NO.	PARTS NAME	REMARKS	SUFFIX
	CJ903	MA-Y-0-08-V5-9	CONNECTOR WIRE		
	CJ904	MA-Y-0-09-MA-10	CONNECTOR WIRE	MAIN-VOL	
	CJ905	FSDM3002-006F	CONN ASSY 3P	MAIN-BASS/TRE	
	CJ906	VWS205-134K4K	FLAT WIRE	MAIN-BASS/TRE	
	PL501	VGZ0001-037	LAMP		
	PL502	VGZ0001-037	LAMP		
	PL503	VGZ0001-040	LAMP		
	PL504	VGZ0001-040	LAMP		
	S 501	QSP1A11-V06AZ	TACT SWITCH		
	S 502	QSP1A11-V06AZ	TACT SWITCH		
	S 503	QSP1A11-V06AZ	TACT SWITCH		
	S 504	QSP1A11-V06AZ	TACT SWITCH		
	S 505	QSP1A11-V06AZ	TACT SWITCH		
	S 506	QSP1A11-V06AZ	TACT SWITCH		
	S 507	VST0016-001	TACT SWITCH		
	S 508	VST0016-001	TACT SWITCH		
	S 509	VST0016-001	TACT SWITCH		

13. Illustration of Packing and Parts List

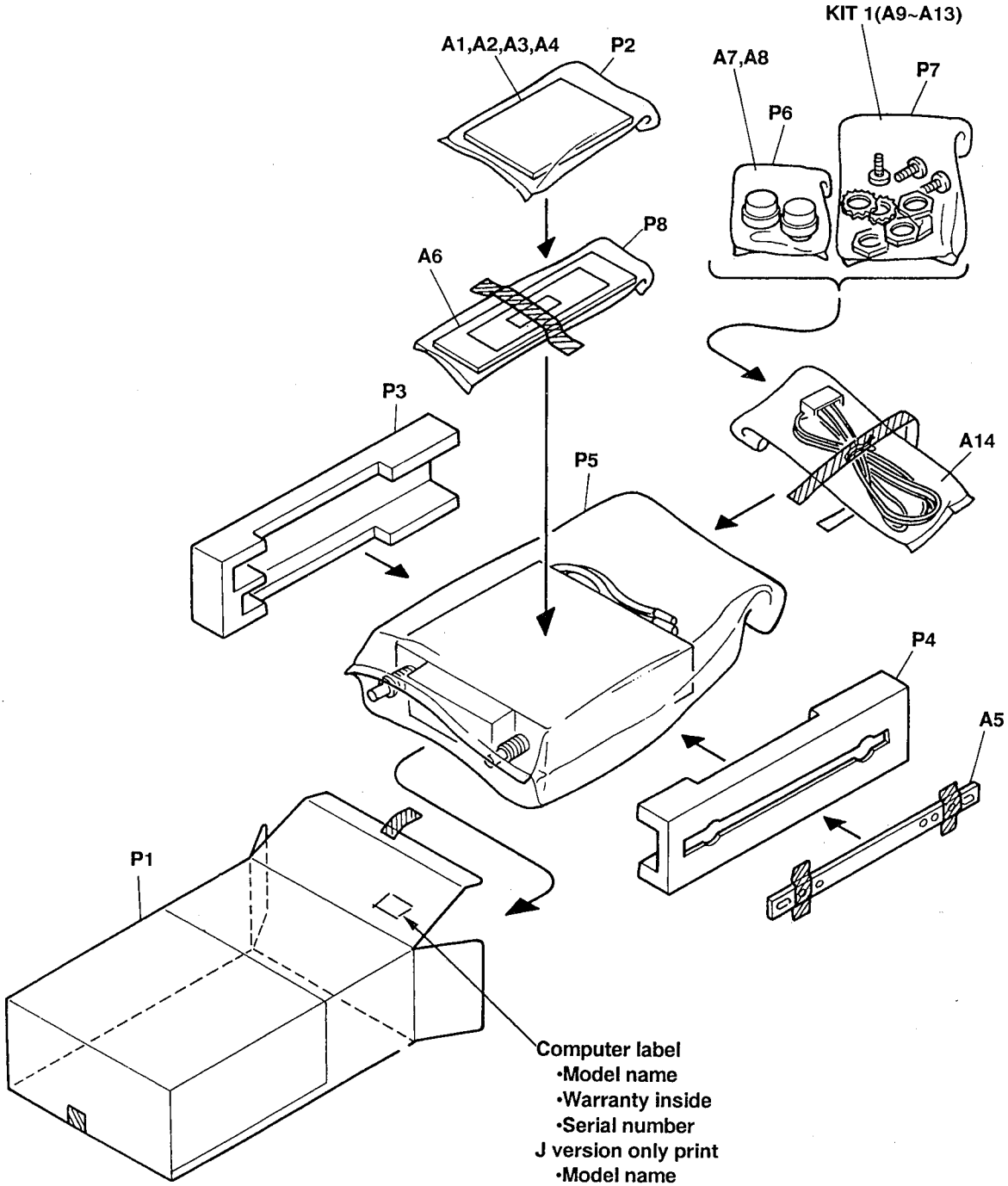

Fig. 13-1

BLOCK NO. M3MM

⚠	REF.	PARTS NO.	PARTS NAME	REMARKS	QTY	SUFFIX	CLR
	P 1	FSPE3001-009	CARTON		1		
	P 2	QPGA017-02505	POLY BAG	INSTRUCTIONS	1		
	P 3	VPH2305-001	CUSHION (L)		1		
	P 4	VPH2306-002	CUSHION (R)		1		
	P 5	VPE3004-001	POLY BAG	FOR SET	1		
	P 6	QPGA012-01505	POLY BAG	KNOB ASSY	1		
	P 7	QPGA007-01003	POLY BAG		1		
	P 8	QPGA008-02508	POLY BAG	TRIME PLATE	1		

14. Accessories

BLOCK NO. M4MM

⚠	REF.	PARTS NO.	PARTS NAME	REMARKS	QTY	SUFFIX	CLR
	A 1	FSUN3007-631S	INSTRUCTIONS		1		
	A 2	BT-20059D	WARRANTY CARD		1		
	A 3	BT-20137	WARRANTY CARD		1		
	A 4	VNC2400-090	IMPORTANT NOTE		1		
	A 5	VKL5460-001	STAY		1		
	A 6	FSJC2001-001	TRIM PLATE		1		
	A 7	FSXL4003-00A	KNOB ASS'Y	KNOB A + SPRING	2		
	A 8	FSXL4002-001	KNOB B		2		
	A 9	VKZ4328-001	LOCK NUT		1		
	A 10	WNS5000Z	WASHER		1		
	A 11	VKH4871-001	MOUNT BOLT		1		
	A 12	V1285022-003	WASHER		4		
	A 13	V1285020-003	HEAVY NUT		4		
	A 14	VMC0014-140T	13P CORD ASS'Y		1		
	KIT 1	KSRX165K-SCREW	SCREW PARTS KIT	P7,A9-A13	1		

JVC

VICTOR COMPANY OF JAPAN, LIMITED
AUDIO PRODUCTS DIVISION 10-1, 1-chome, Ohwatari-machi, Maebashi-city, Japan

(No. 49236)

Printed in Japan
–H0701–O–