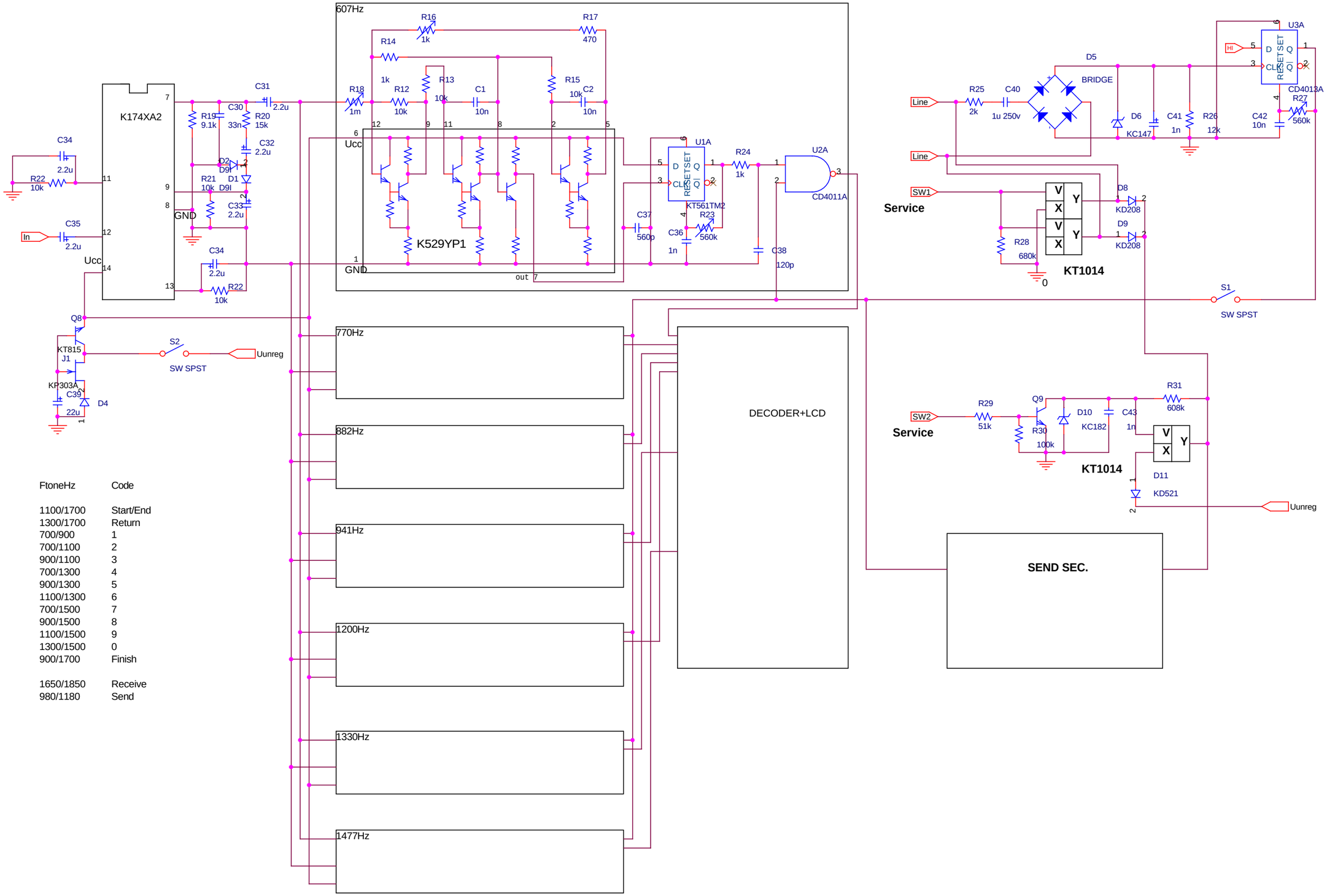

FtoneHz	Code
1100/1700	Start/End
1300/1700	Return
700/900	1
700/1100	2
900/1100	3
700/1300	4
900/1300	5
1100/1300	6
700/1500	7
900/1500	8
1100/1500	9
1300/1500	0
900/1700	Finish
1650/1850	Receive
980/1180	Send

Ïðî ñòó é Î ïî çí àâàòåëü í î ì åðà òåëåô î í à ñì àëû ì ïî òðåáëåí èåì .

Title <Title>		
Size A3	Document Number <Doc>	Rev
Date: Thursday, November 21, 2002	Sheet 1 of 1	