Service Manual

PIONEER®
The Art of Entertainment

KEH-P4500R/X1M/EW

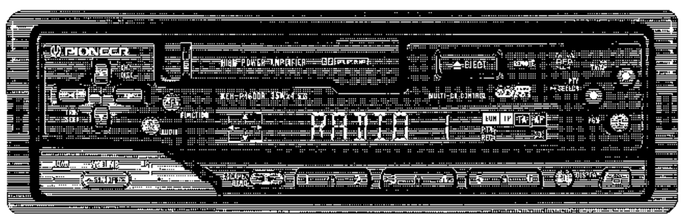

ORDER NO.
CRT2084

MULTI-CD CONTROL HIGH POWER CASSETTE PLAYER WITH RDS TUNER

KEH-P4500R X1M/EW

KEH-P4530R X1M/EW

MULTI-CD CONTROL HIGH POWER CASSETTE PLAYER WITH FM/MW/LW TUNER

KEH-P4510 X1M/EE

NOTE:

- **See the separate manual CX-631(CRT1640) for the cassette mechanism description.**
- **The cassette mechanism assy employed in this model is one of X-2L series**
- **This service manual does not describe the CD test mode.**
  For the operations in the CD test mode, refer to the CD player's Service Manual.

CONTENTS

1. SAFETY INFORMATION 2
2. EXPLODED VIEWS AND PARTS LIST 3
3. SCHEMATIC DIAGRAM 12
4. PCB CONNECTION DIAGRAM 30
5. ELECTRICAL PARTS LIST 42
6. ADJUSTMENT 52
7. GENERAL INFORMATION 56
7.1 PARTS 56
7.1.1 IC 56
7.1.2 DISPLAY 61
7.2 DISASSEMBLY 64
7.3 BLOCK DIAGRAM 66
8. OPERATIONS AND SPECIFICATIONS 68

PIONEER ELECTRONIC CORPORATION 4-1, Meguro 1-Chome, Meguro-ku, Tokyo 153, Japan
PIONEER ELECTRONICS SERVICE INC. P.O.Box 1760, Long Beach, CA 90801-1760 U.S.A.
PIONEER ELECTRONIC [EUROPE] N.V. Haven 1087 Keetberglaan 1, 9120 Melsele, Belgium
PIONEER ELECTRONICS ASIACENTRE PTE.LTD. 501 Orchard Road, #10-00, Lane Crawford Place, Singapore 0923

© **PIONEER ELECTRONIC CORPORATION 1997**

K-FEU SEPT. 1997 Printed in Belgium

ClibPDF - www.fastio.com

1. SAFETY INFORMATION

This service manual is intended for qualified service technicians; it is not meant for the casual do-it-yourselfer.
Qualified technicians have the necessary test equipment and tools, and have been trained to properly and safely repair complex products such as those covered by this manual.
Improperly performed repairs can adversely affect the safety and reliability of the product and may void the warranty.
If you are not qualified to perform the repair of this product properly and safely, you should mot risk trying to do so and refer the repair to a qualified service technician.

ClibPDF - www.fastio.com

2. EXPLODED VIEWS AND PARTS LIST

2.1 PACKING

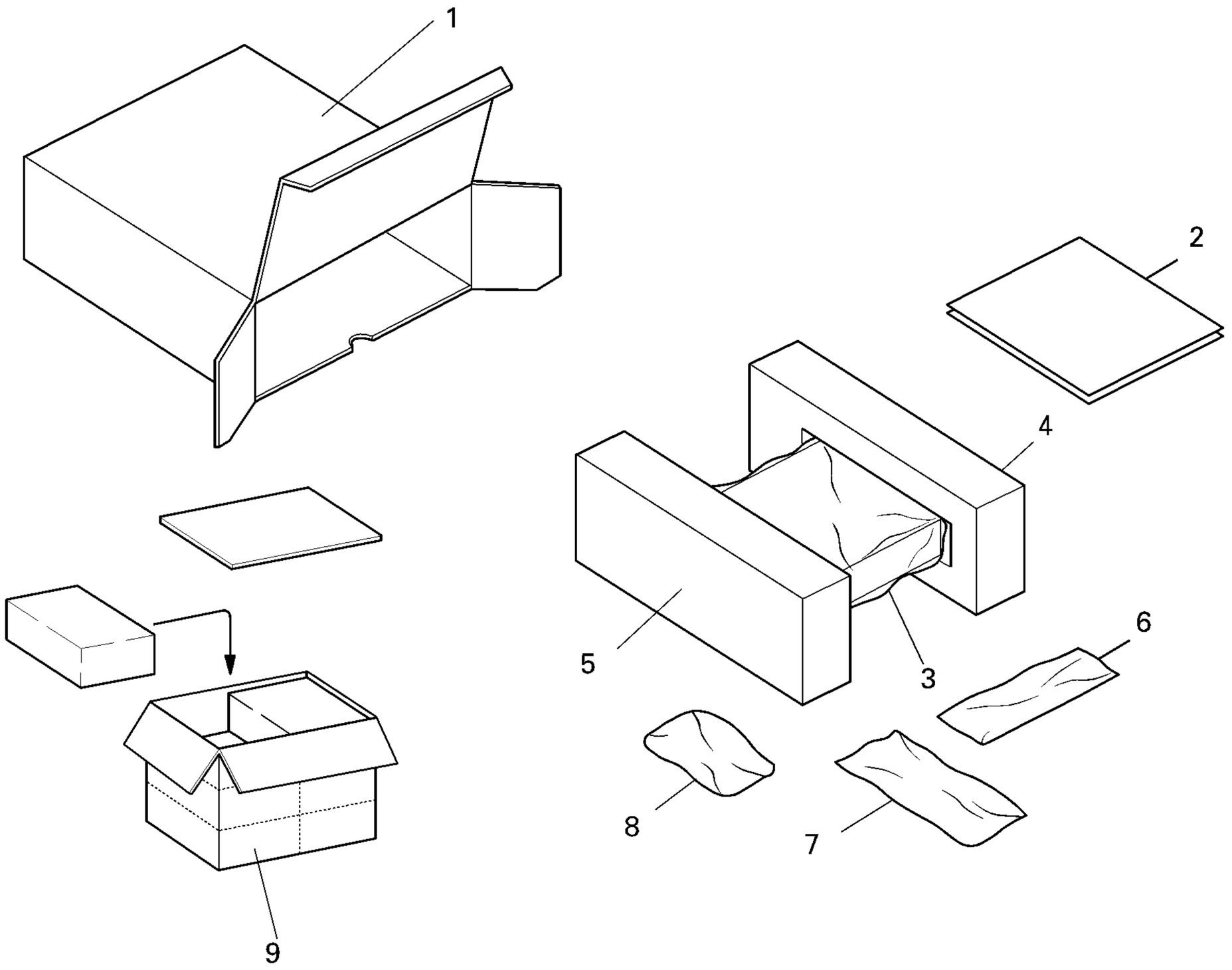

Fig. 1

NOTE:

- Parts marked by "*"are generally unavailable because they are not in our Master Spare Parts List.
- Screws adjacent to ▼ mark on the product are used for disassembly.

● **PACKING SECTION PARTS LIST**

Mark No.	Description	Part No. KEH-P4500R/X1M/EW	KEH-P4530R/X1M/EW	KEH-P4510/X1M/EE
1	Carton	CHG3351	CHG3354	CHG3357
2-1	Owner's Manual	CRD2495	CRD2495	CRD2500
2-2	Owner's Manual	CRD2496	CRD2496	Not used
2-3	Owner's Manual	CRD2497	CRD2497	Not used
2-4	Installation Manual	CRD2498	CRD2498	CRD2502
* 2-5	Warranty Card	CRY1087	CRY1087	CRY1087
* 2-6	Passport	CRY1013	CRY1013	Not used
3	Polyethylene Bag	CEG-162	CEG-162	CEG-162
4	Protector	CHP1622	CHP1622	CHP1622
5	Protector	CHP1623	CHP1623	CHP1623
6	Case Assy	CXB1063	CXB1063	CXB1063
7	Cord Assy	CDE5497	CDE5286	CDE4849
8	Accessory Assy	CEA1917	CEA1917	CEA1917
9	Contain Box	CHL3351	CHL3354	CHL3357

ClibPDF - www.fastio.com

● Owner's Manual,Installation Manual

Model	Part No.	Language
KEH-P4500R/X1M/EW KEH-P4530R/X1M/EW	CRD2495	English, Spanish
	CRD2496	German, French
	CRD2497	Italian, Dutch
	CRD2498	English, Spanish, German, French Italian, Dutch
KEH-P4510/X1M/EE	CRD2500 CRD2502	English, Russian

● Accessory Assy

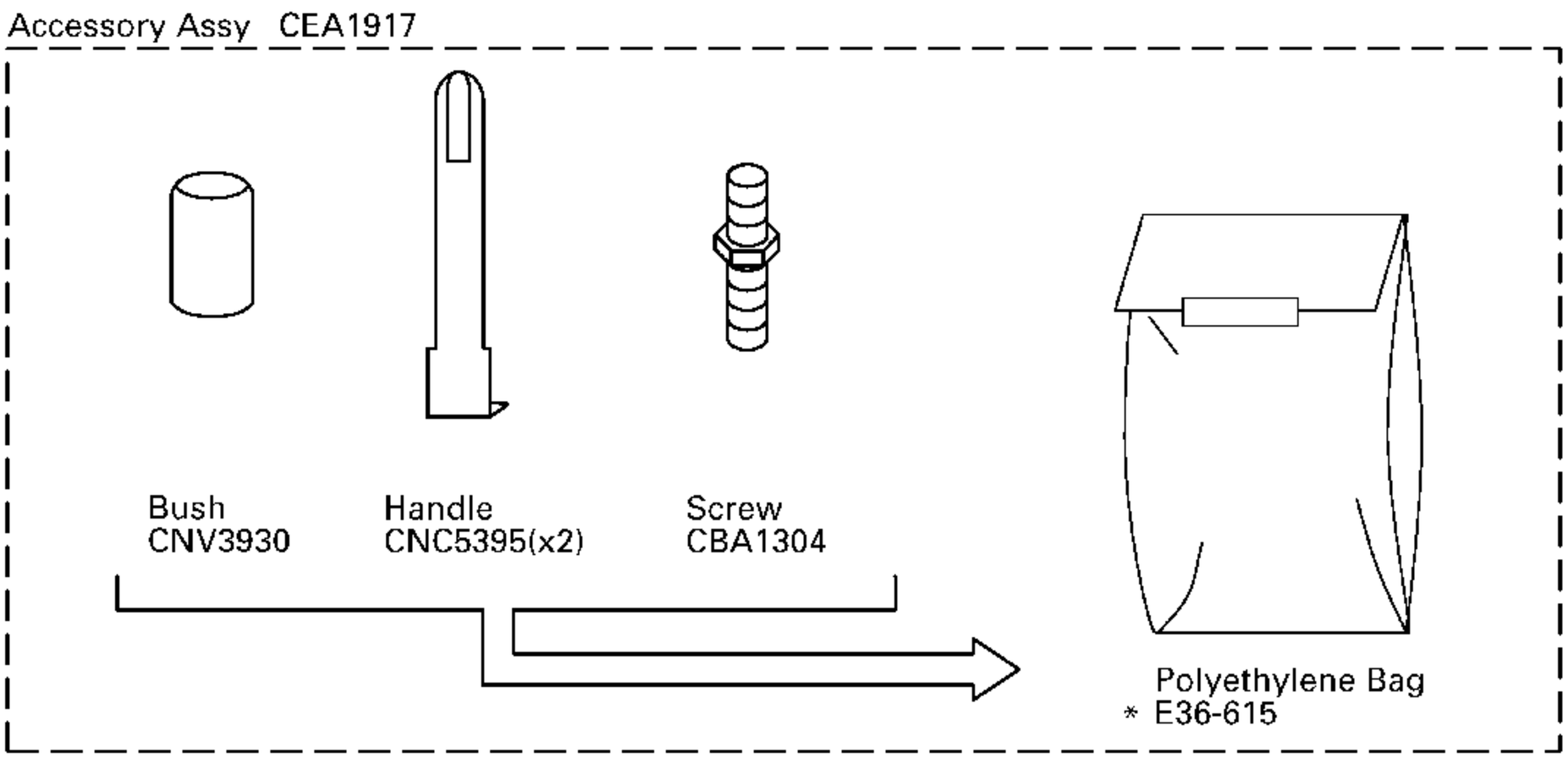

Fig. 2

ClibPDF - www.fastio.com

2.2 EXTERIOR

● KEH-P4500R/X1M/EW, P4530R/X1M/EW

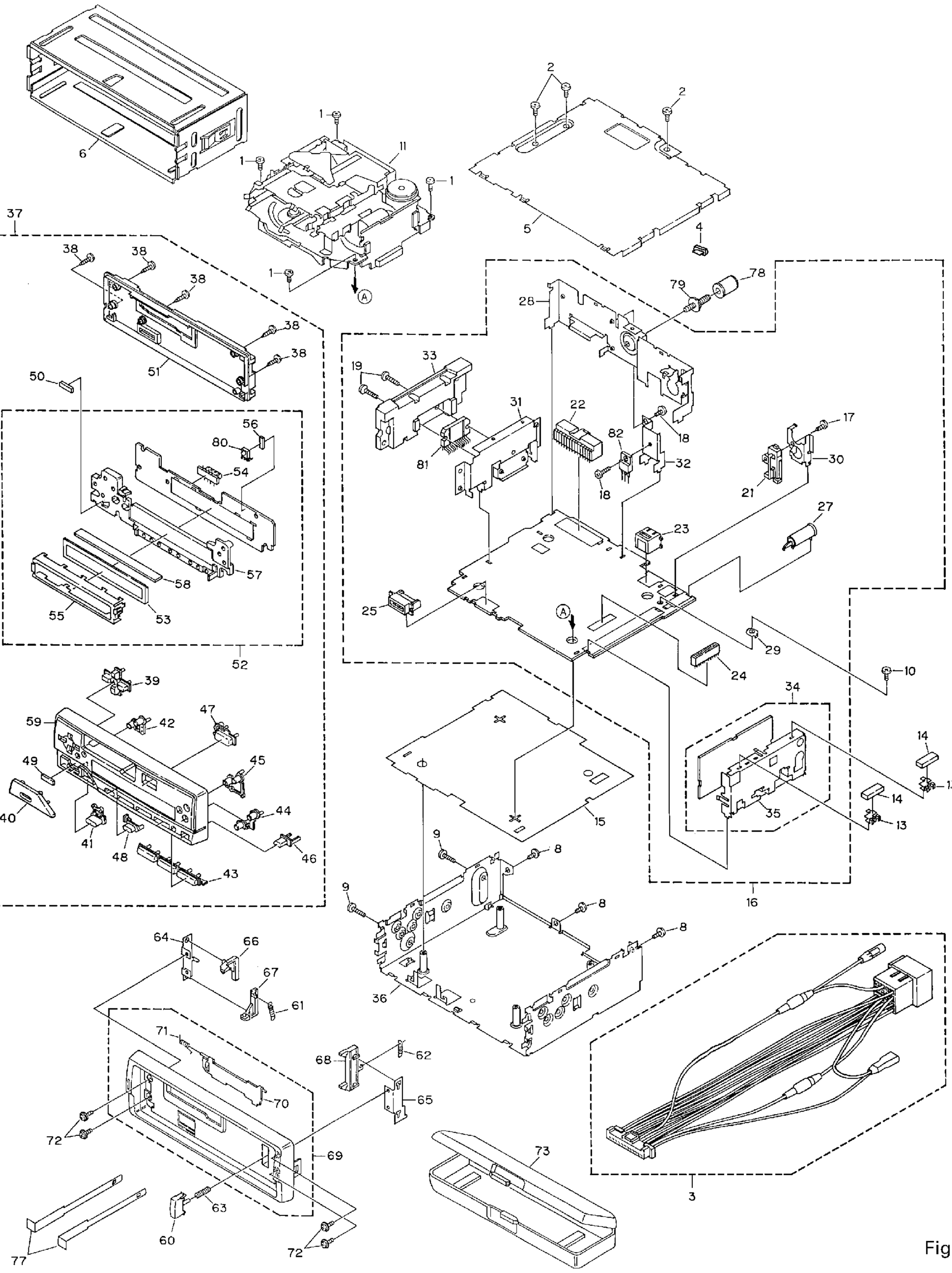

Fig. 3

ClibPDF - www.fastio.com

● EXTERIOR SECTION PARTS LIST

Mark No.	Description	Part No. KEH-P4500R/X1M/EW	Part No. KEH-P4530R/X1M/EW
1	Screw	BSZ26P050FMC	BSZ26P050FMC
2	Screw	BSZ30P060FMC	BSZ30P060FMC
3	Cord Assy	CDE5497	CDE5497
4	Fuse(10A)	CEK1136	CEK1136
5	Case	CNB2074	CNB2074
6	Holder	CNC5394	CNC5394
7	•••••		
8	Screw	BSZ30P060FMC	BSZ30P060FMC
9	Screw	BMZ30P100FMC	BMZ30P100FMC
10	Screw	BSZ30P055FUC	BSZ30P055FUC
11	Cassette Mechanism Module	EXK3685	EXK3685
12	•••••		
13	Holder	CNC5704	CNC5704
14	Cushion	CNM4870	CNM4870
15	Insulator	CNM5045	CNM5045
16	Tuner Amp Unit	CWM5653	CWM5653
17	Screw	BPZ26P080FMC	BPZ26P080FMC
18	Screw	BSZ26P080FMC	BSZ26P080FMC
19	Screw	BSZ26P140FMC	BSZ26P140FMC
20	•••••		
21	Pin Jack(CN301)	CKB1028	CKB1028
22	Plug(CN951)	CKM1270	CKM1270
23	Connector(CN751)	CKS3408	CKS3408
24	Connector(CN602)	CKS3568	CKS3568
25	Connector(CN601)	CKS3581	CKS3581
26	Connector(CN302)	CKS3598	CKS3598
27	Antenna Jack(CN402)	CKX1056	CKX1056
28	Panel	CNB2245	CNB2245
29	Holder	CNC5399	CNC5399
30	Holder	CNC6531	CNC6531
31	Holder	CNC6674	CNC6674
32	Holder	CNC6845	CNC6845
33	Heat Sink	CNR1426	CNR1426
34	FM/AM Tuner Unit	CWE1416	CWE1416
35	Holder	CNC6555	CNC6555
36	Chassis Unit	CXB2041	CXB2042
37	Detach Grille Assy	CXB2032	CXB2033
38	Screw	BPZ20P120FZK	BPZ20P120FZK
39	Button	CAC5538	CAC5538
40	Button(+,-)	CAC5537	CAC5537
41	Button(SOURCE)	CAC4861	CAC4861
42	Button(FUNC,AUDIO)	CAC4862	CAC4862
43	Button(1-6)	CAC4864	CAC4992
44	Button(PGM,DISPLAY)	CAC4865	CAC4865
45	Button(TA,PTY)	CAC5539	CAC5539

ClibPDF - www.fastio.com

Mark No.	Description	Part No. KEH-P4500R/X1M/EW	Part No. KEH-P4530R/X1M/EW
46	Button(Detach)	CAC4870	CAC4993
47	Button(EJECT)	CAC4874	CAC4874
48	Button(◁▷)	CAC5130	CAC5130
49	Cushion	CNM5156	CNM5156
50	Cushion	CNM5271	CNM5271
51	Cover	CNS4194	CNS4369
52	Keyboard Unit	CWM5656	CWM5657
53	LCD(LCD901)	CAW1383	CAW1391
54	Connector(CN901)	CKS3580	CKS3580
55	Holder	CNC6846	CNC6846
56	Spacer	CNM5043	CNM5043
57	Lighting Conductor	CNV4762	CNV4762
58	Connector	CNV4763	CNV4763
59	Grille Unit	CXB2327	CXB2328
60	Button	CAC4836	CAC4836
61	Spring	CBH1834	CBH1834
62	Spring	CBH1835	CBH1835
63	Spring	CBH1996	CBH1996
64	Bracket	CNC6135	CNC6135
65	Bracket	CNC6791	CNC6791
66	Arm	CNV4692	CNV4692
67	Arm	CNV4693	CNV4693
68	Arm	CNV4728	CNV4728
69	Panel Unit	CXB1037	CXB1038
70	Door	CAT1840	CAT1840
71	Spring	CBH1838	CBH1838
72	Screw	IMS20P030FZK	IMS20P030FZK
73	Case Assy	CXB1063	CXB1063
74-76	•••••		
77	Handle	CNC5395	CNC5395
78	Bush	CNV3930	CNV3930
79	Screw	CBA1304	CBA1304
80	IC(IC902)	SBX8035-H	SBX8035-H
81	IC(IC301)	TDA7384A	TDA7384A
82	Transistor(Q951)	2SD2396	2SD2396

ClibPDF - www.fastio.com

● KEH-P4510/X1M/EE

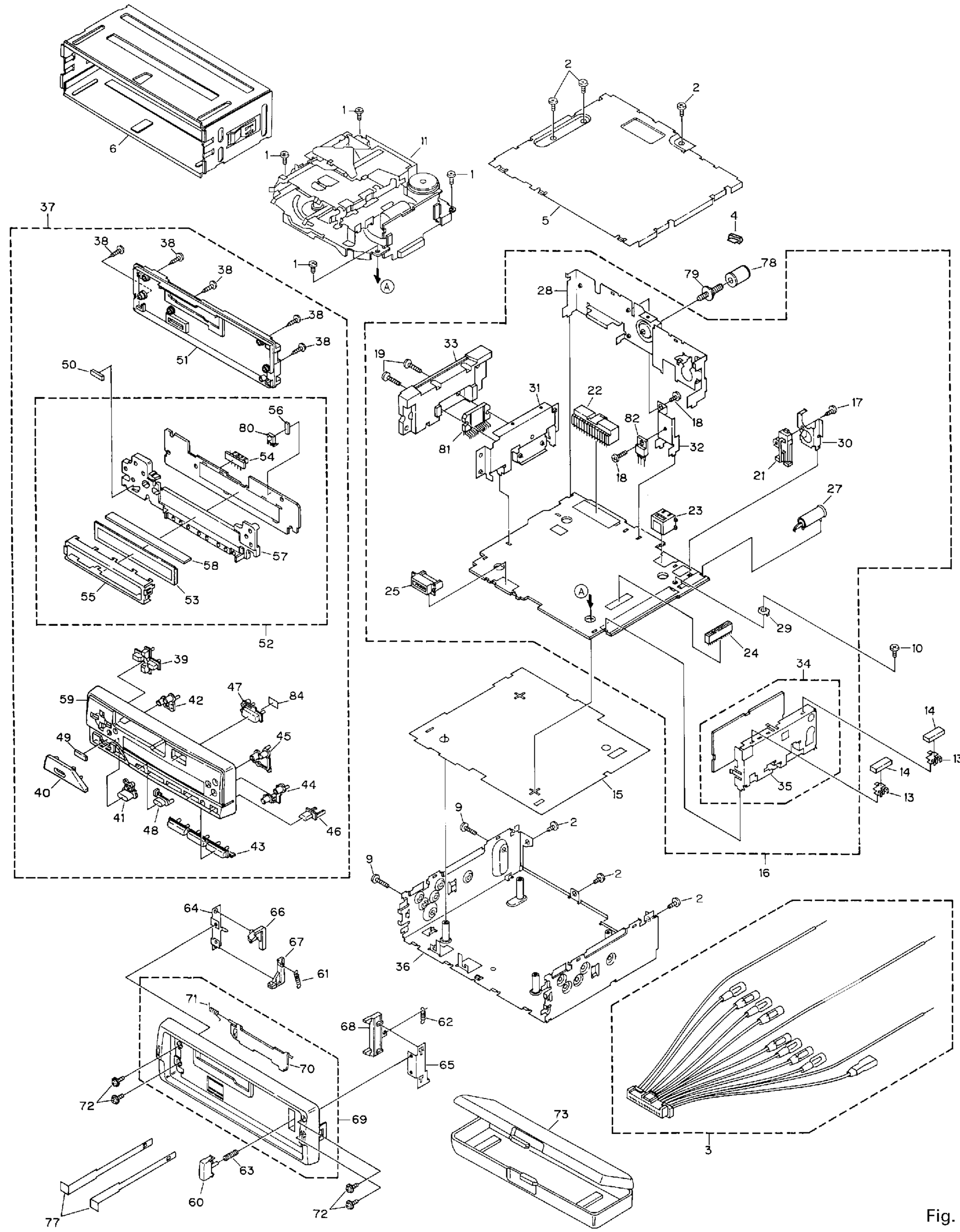

Fig. 4

ClibPDF - www.fastio.com

● EXTERIOR SECTION PARTS LIST

Mark No.	Description	Part No.
1	Screw	BSZ26P050FMC
2	Screw	BSZ30P060FMC
3	Cord Assy	CDE5496
4	Fuse(10A)	CEK1136
5	Case	CNB2074
6	Holder	CNC5394
7	•••••	
8	•••••	
9	Screw	BMZ30P100FMC
10	Screw	BSZ30P055FUC
11	Cassette Mechanism Module	EXK3685
12	•••••	
13	Holder	CNC5704
14	Cushion	CNM4870
15	Insulator	CNM5045
16	Tuner Amp Unit	CWM5655
17	Screw	BPZ26P080FMC
18	Screw	BSZ26P080FMC
19	Screw	BSZ26P140FMC
20	•••••	
21	Pin Jack(CN301)	CKB1028
22	Plug(CN951)	CKM1270
23	Connector(CN751)	CKS3408
24	Connector(CN602)	CKS3568
25	Connector(CN601)	CKS3581
26	Connector(CN302)	CKS3598
27	Antenna Jack(CN402)	CKX1056
28	Panel	CNB2245
29	Holder	CNC5399
30	Holder	CNC6531
31	Holder	CNC6674
32	Holder	CNC6845
33	Heat Sink	CNR1426
34	Tuner Unit	CWE1366
35	Holder	CNC6523
36	Chassis Unit	CXA9858
37	Detach Grille Assy	CXB2034
38	Screw	BPZ20P120FZK
39	Button	CAC5538
40	Button(+,-)	CAC5537
41	Button(SOURCE)	CAC4861
42	Button(FUNC,AUDIO)	CAC4862
43	Button(1-6)	CAC4864
44	Button(PGM,DISPLAY)	CAC4865
45	Button(LOUD,CLOCK)	CAC5539

Mark No.	Description	Part No.
46	Button(Detach)	CAC4870
47	Button(EJECT)	CAC4874
48	Button(◁▷)	CAC5130
49	Cushion	CNM5156
50	Cushion	CNM5271
51	Cover	CNS4194
52	Keyboard Unit	CWM5655
53	LCD(LCD901)	CAW1410
54	Connector(CN901)	CKS3580
55	Holder	CNC6846
56	Spacer	CNM5043
57	Lighting Conductor	CNV4762
58	Connector	CNV4763
59	Grille Unit	CXB2329
60	Button	CAC4836
61	Spring	CBH1834
62	Spring	CBH1835
63	Spring	CBH1996
64	Bracket	CNC6135
65	Bracket	CNC6791
66	Arm	CNV4692
67	Arm	CNV4693
68	Arm	CNV4728
69	Panel Unit	CXB1038
70	Door	CAT1840
71	Spring	CBH1838
72	Screw	IMS20P030FZK
73	Case Assy	CXB1063
74-76	•••••	
77	Handle	CNC5395
78	Bush	CNV3930
79	Screw	CBA1304
80	IC(IC902)	SBX8035-H
81	IC(IC301)	TDA7384A
82	Transistor(Q951)	2SD2396

ClibPDF - www.fastio.com

2.3 CASSETTE MECHANISM MODULE

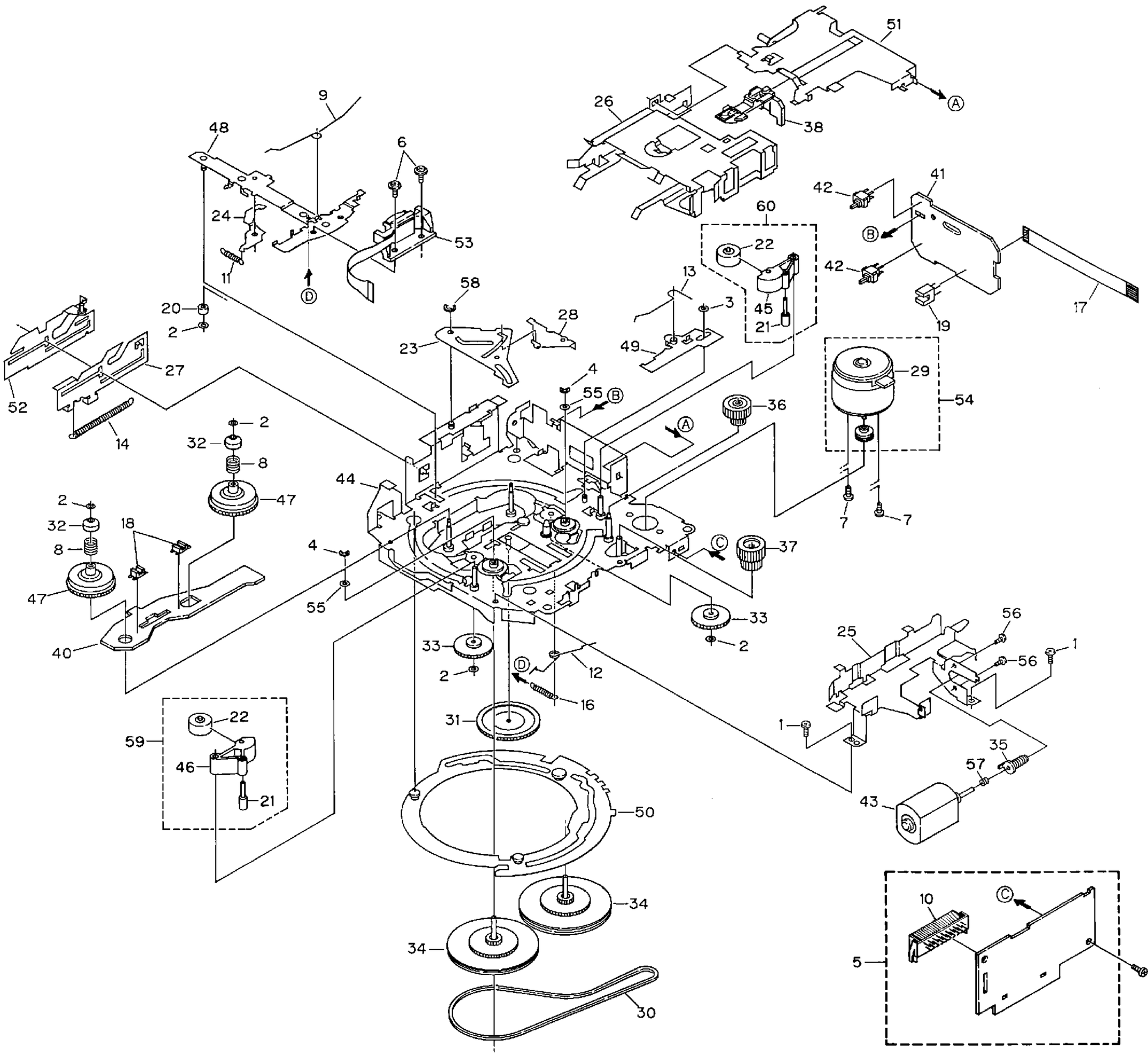

Fig. 5

ClibPDF - www.fastio.com

● CASSETTE MECHANISM MODULE SECTION PARTS LIST

Mark No.	Description	Part No.
1	Screw	BSZ20P040FMC
2	Washer	CBF1037
3	Washer	CBF1038
4	Washer	CBG1003
5	Deck Unit	EWM1012
6	Screw	EBA1028
7	Screw	EBA1037
8	Spring	EBH1531
9	Spring	EBH1575
10	Plug(CN251)	CKS3540
11	Spring	EBH1515
12	Spring	EBH1587
13	Spring	EBH1517
14	Spring	EBH1518
15	•••••	
16	Spring	EBH1537
17	Cord	EDD1020
18	Photo-interrupter(EGN2,3)	EGN1006
19	Photo-interrupter(EGN1)	EGN1005
20	Roller	ENR1031
21	Shaft	ELA1373
22	Pinch Roller	ENV1518
23	Arm	ENC1489
24	Arm	ENC1397
25	Guide	ENC1481
26	Holder	ENC1417
27	Lever	ENC1448
28	Arm	ENC1488
29	Motor	EXM1028
30	Belt	ENT1027
31	Gear	ENV1347
32	Collar	ENV1508
33	Gear	ENV1350
34	Flywheel	ENV1410
35	Worm Gear	ENV1439
36	Worm Wheel	ENV1440
37	Gear	ENR1028
38	Lever	ENV1442
39	•••••	
40	Gathering PCB	ENX1037
41	Gathering PCB	ENX1042
42	Switch(S1,S2)	ESG1004
43	Motor Unit(M2)	EXA1485
44	Chassis Unit	EXA1511
45	Pinch Holder	ENV1485
46	Pinch Holder	ENV1486
47	Reel Unit	EXA1537
48	Head Base Unit	EXA1457
49	Lever Unit	EXA1438
50	Gear Unit	EXA1437
51	Frame Unit	EXA1458
52	Lever Unit	EXA1439
53	Head Assy(HD1)	EXA1506
54	Motor Unit(M1)	EXA1464
55	Washer	HBF-179
56	Screw	BMZ20P022FMC
57	Spring	EBH1545
58	Washer	YE20FUC
59	Pinch Holder Unit	EXA1529
60	Pinch Holder Unit	EXA1528

ClibPDF - www.fastio.com

KEH-P4500R,P4530R,P4510

3. SCHEMATIC DIAGRAM

3.1 OVERALL CONNECTION DIAGRAM(GUIDE PAGE)

(KEH-P4500R/X1M/EW, P4530R/X1M/EW)

Note: When ordering service parts, be sure to refer to "EXPLODED VIEWS AND PARTS LIST" or "ELECTRICAL PARTS LIST".

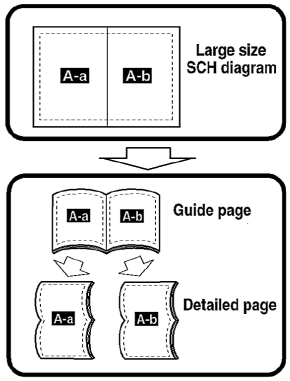

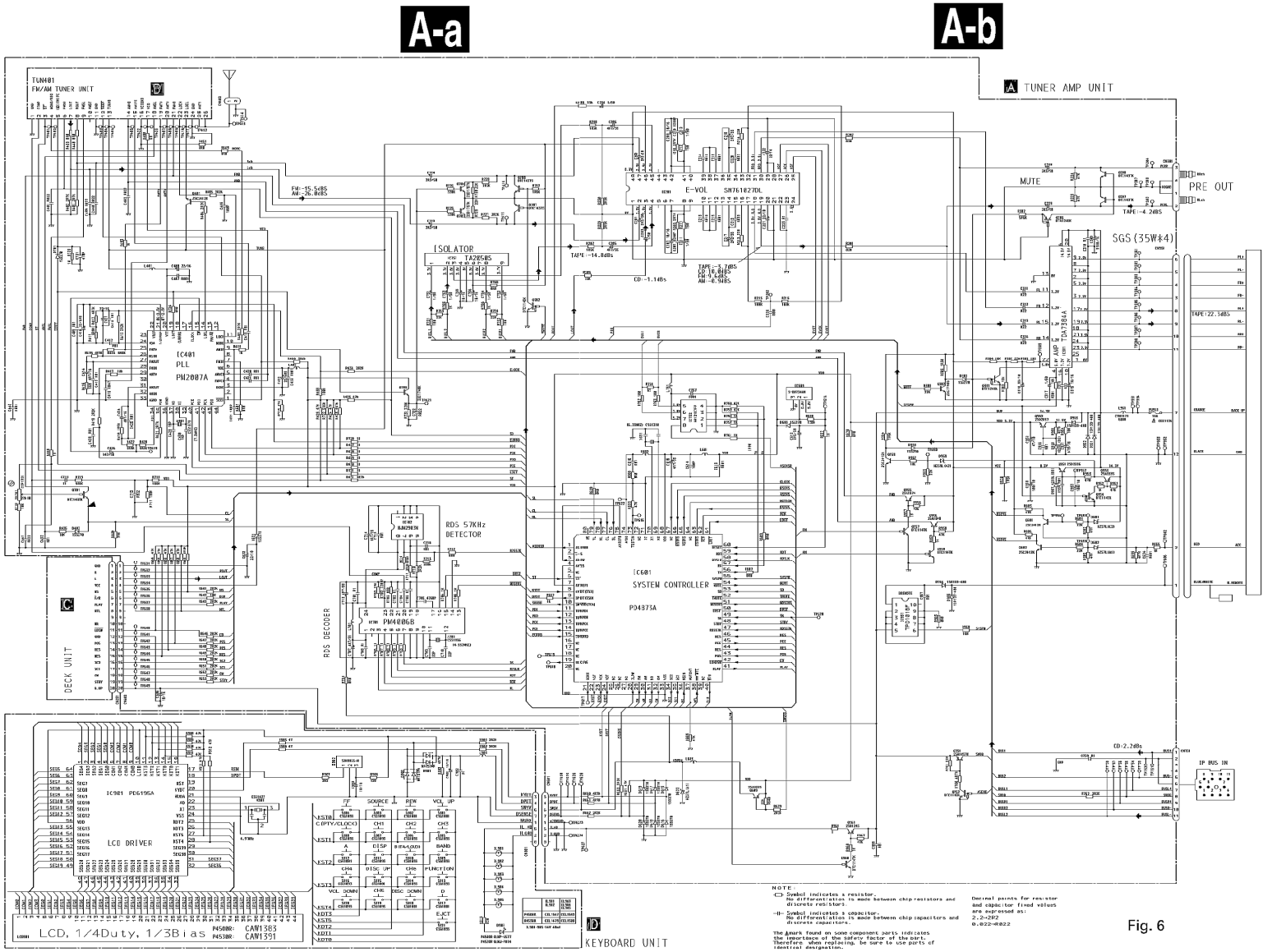

Fig. 6

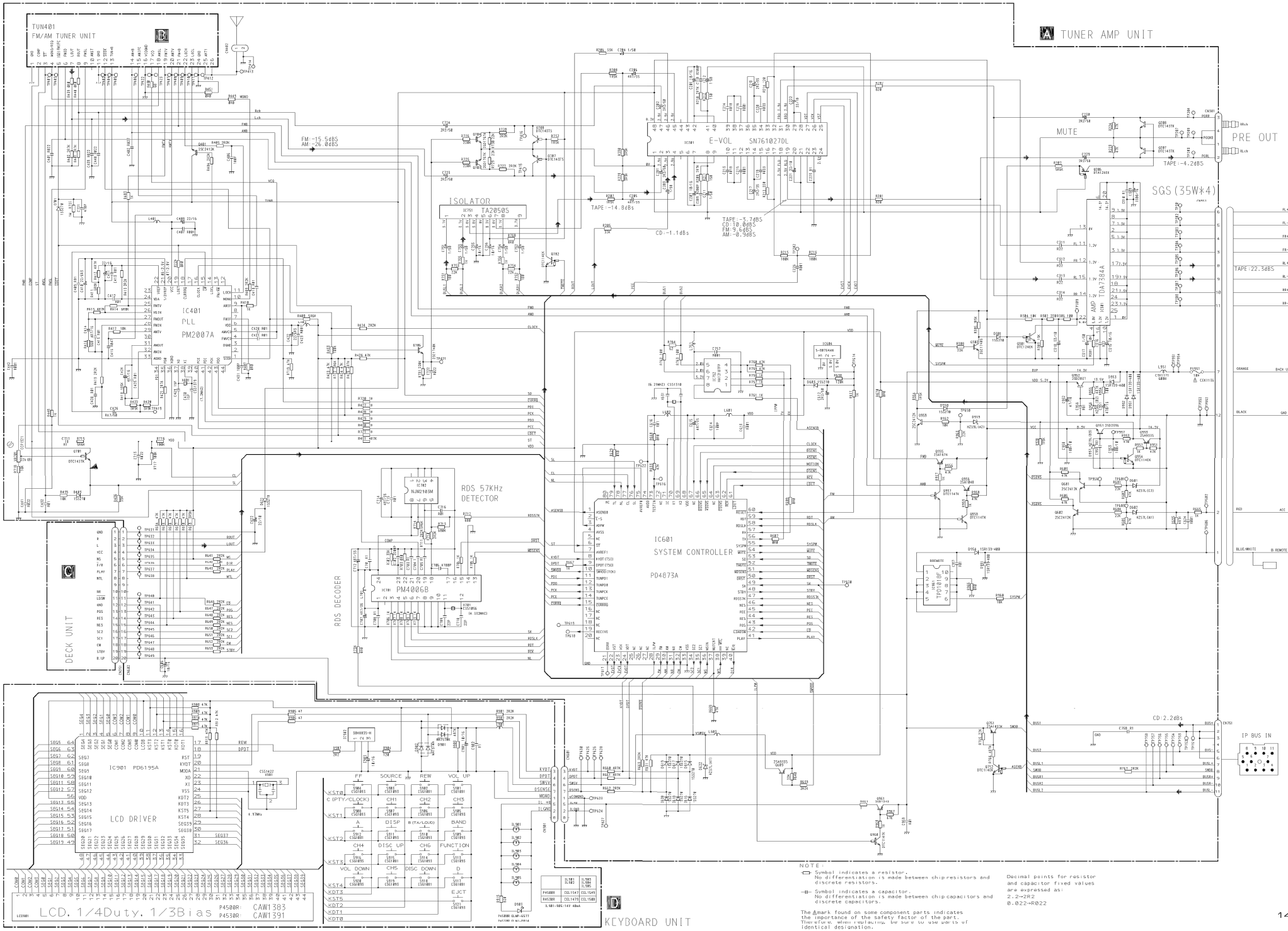

NOTE:

- Symbol indicates a resistor. No differentiation is made between chip resistors and discrete resistors.
- Symbol indicates a capacitor. No differentiation is made between chip capacitors and discrete capacitors.

The △mark found on some component parts indicates the importance of the safety factor of the part. Therefore, when replacing, be sure to use parts of identical designation.

Decimal points for resistor and capacitor fixed values are expressed as:
2.2=2R2
0.022=R022

KEH-P4500R,P4530R,P4510

3.2 OVERALL CONNECTION DIAGRAM(GUIDE PAGE)
(KEH-4510R/X1M/EE)

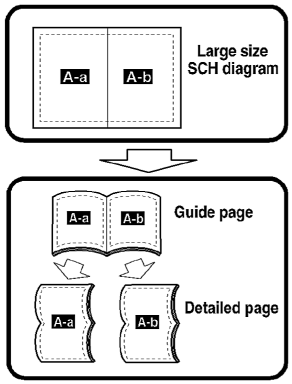

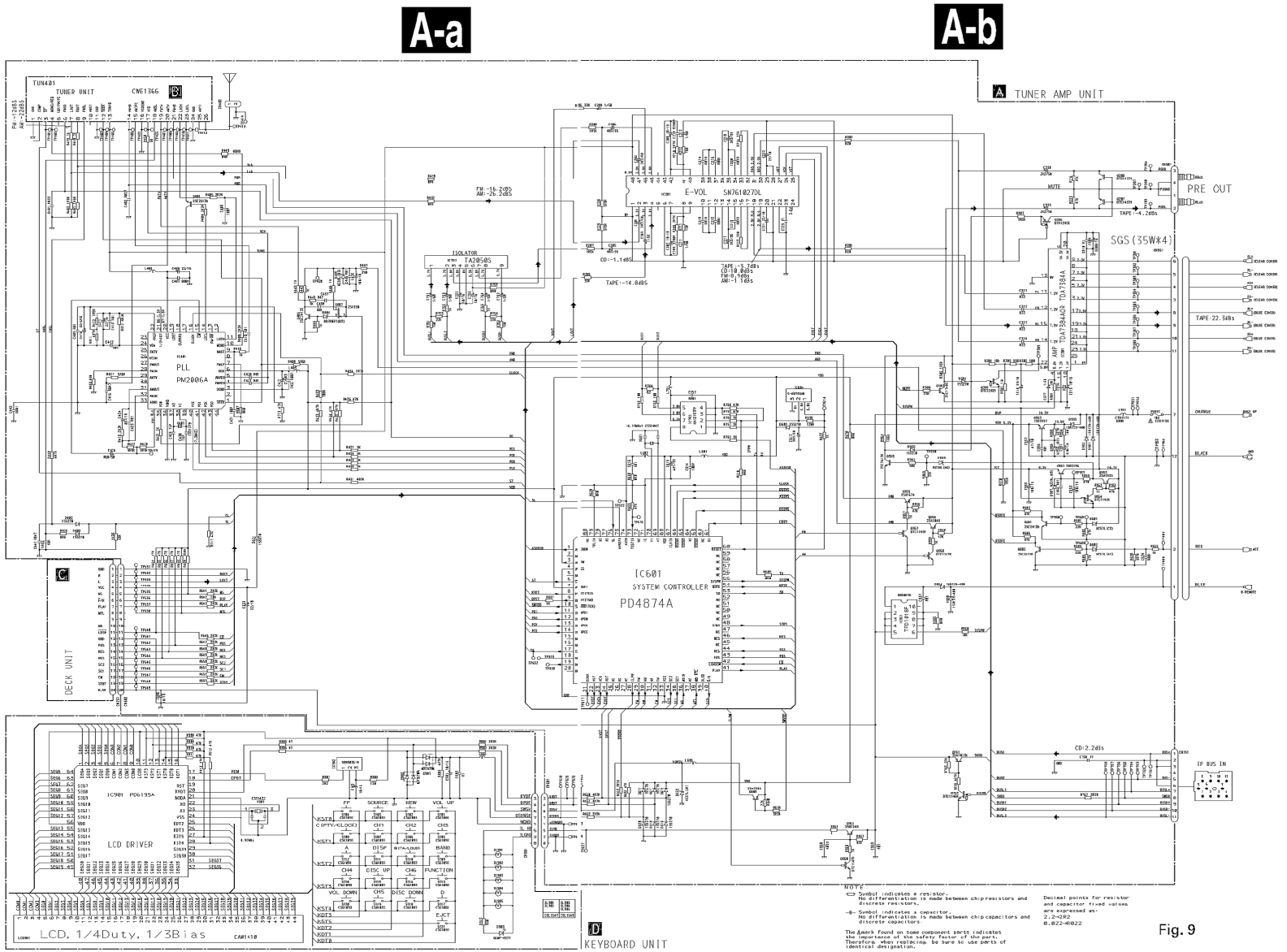

Fig. 9

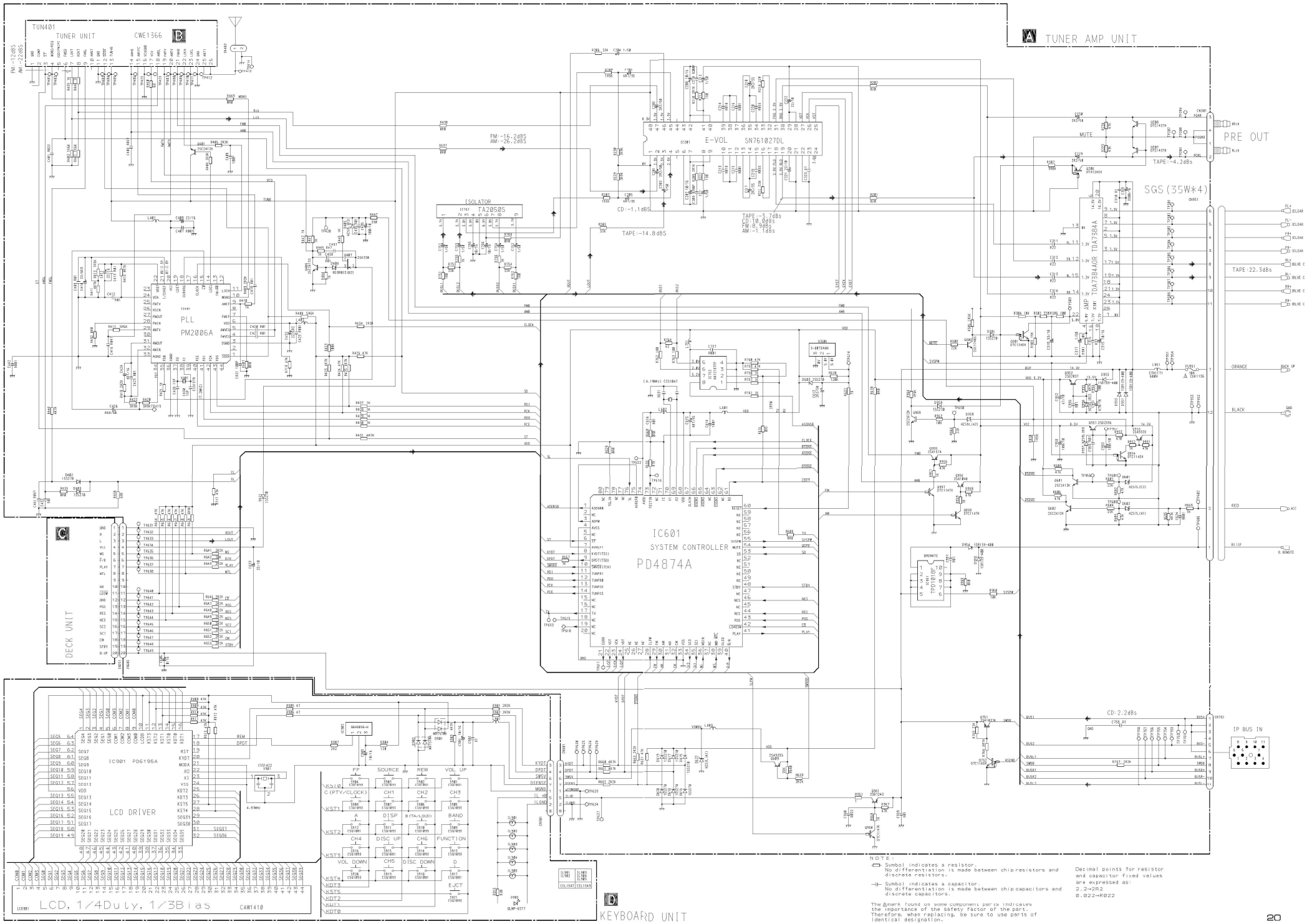

NOTE:

- Symbol indicates a resistor. No differentiation is made between chip resistors and discrete resistors.
- Symbol indicates a capacitor. No differentiation is made between chip capacitors and discrete capacitors.

The Δmark found on some component parts indicates the importance of the safety factor of the part. Therefore, when replacing, be sure to use parts of identical designation.

Decimal points for resistor and capacitor fixed values are expressed as:
2.2→2R2
0.022→R022

KEH-P4500R,P4530R,P4510

3.3 FM/AM TUNER UNIT(KEH-P4500R/X1M/EW, P4530R/X1M/EW)

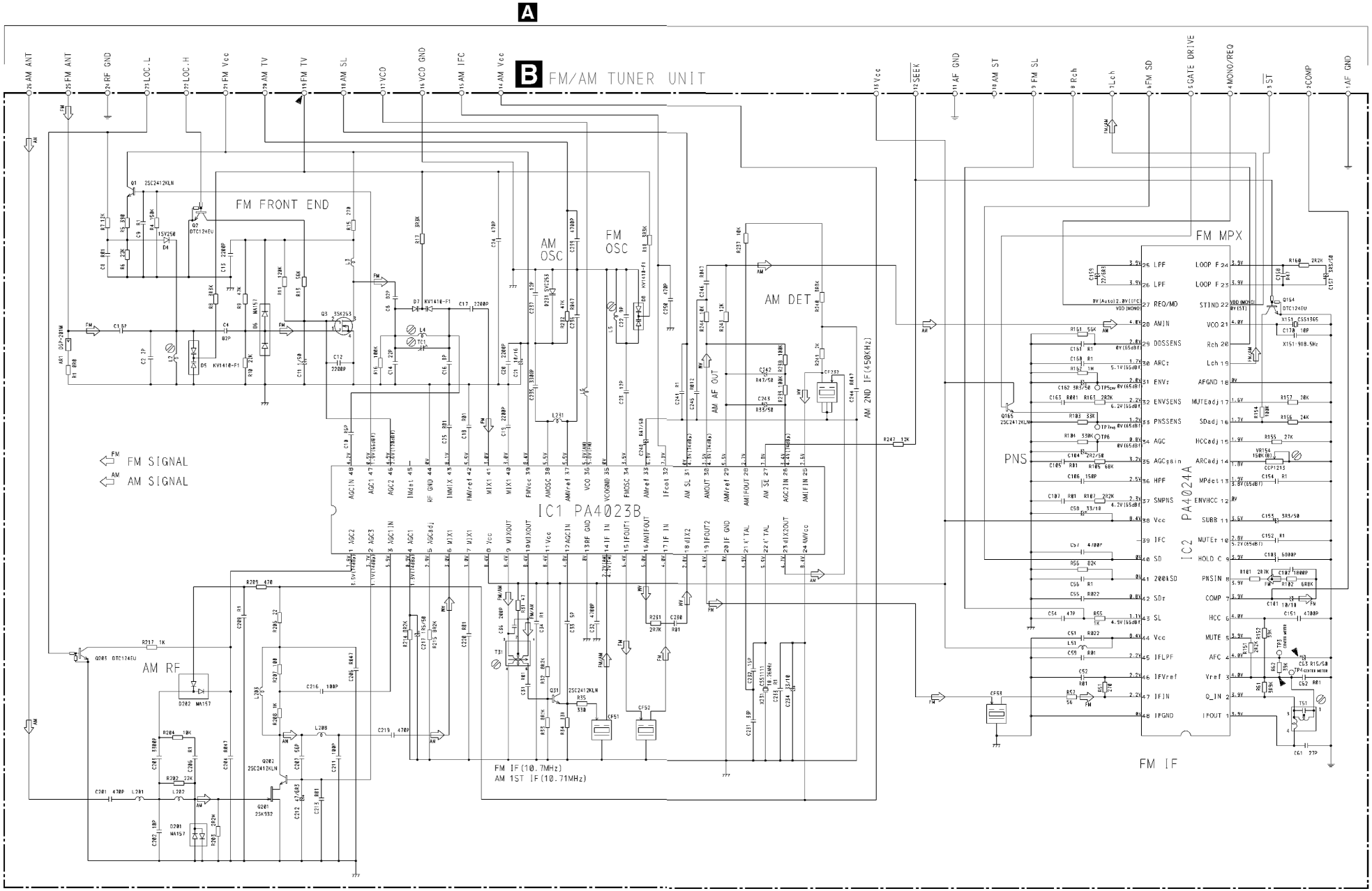

Fig. 12

KEH-P4500R,P4530R,P4510

3.4 TUNER UNIT(KEH-P4510/X1M/EE)

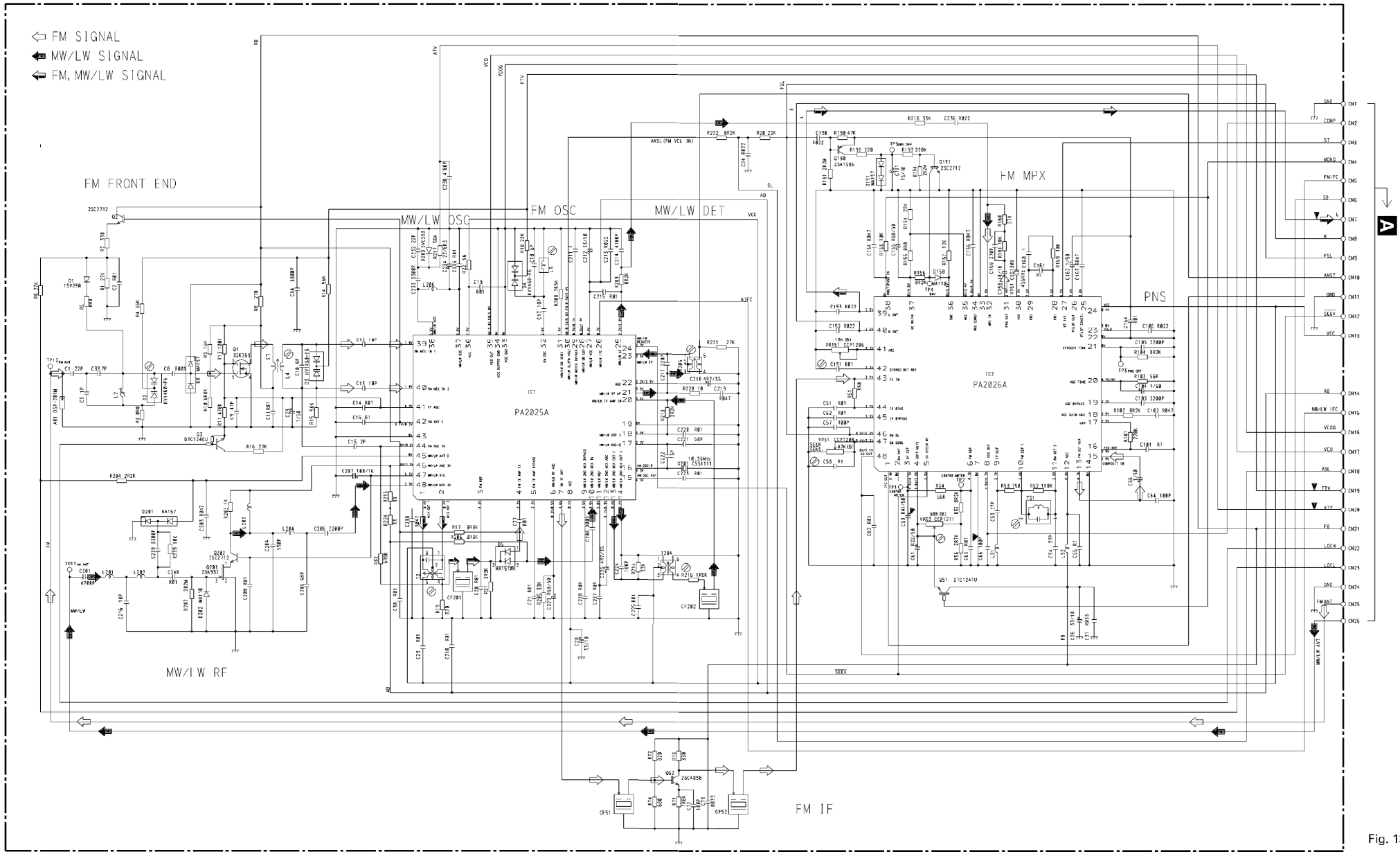

Fig. 13

KEH-P4500R,P4530R,P4510

3.5 CASSETTE MECHANISM MODULE

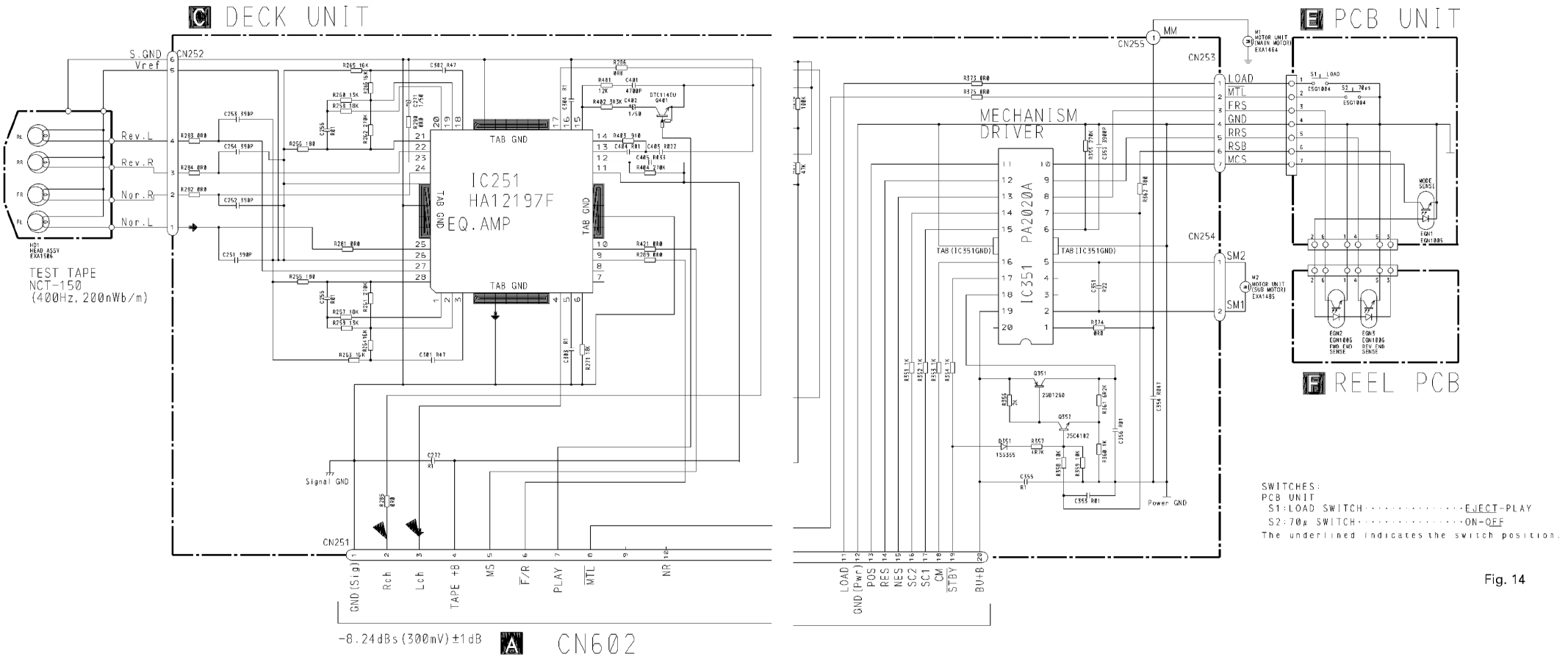

Fig. 14

KEH-P4500R,P4530R,P4510

4. PCB CONNECTION DIAGRAM

4.1 TUNER AMP UNIT

NOTE FOR PCB DIAGRAMS

1. The parts mounted on this PCB include all necessary parts for several destination.
   For further information for respective destinations, be sure to check with the schematic diagram.
2. Viewpoint of PCB diagrams

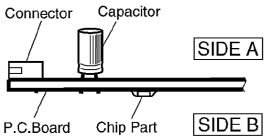

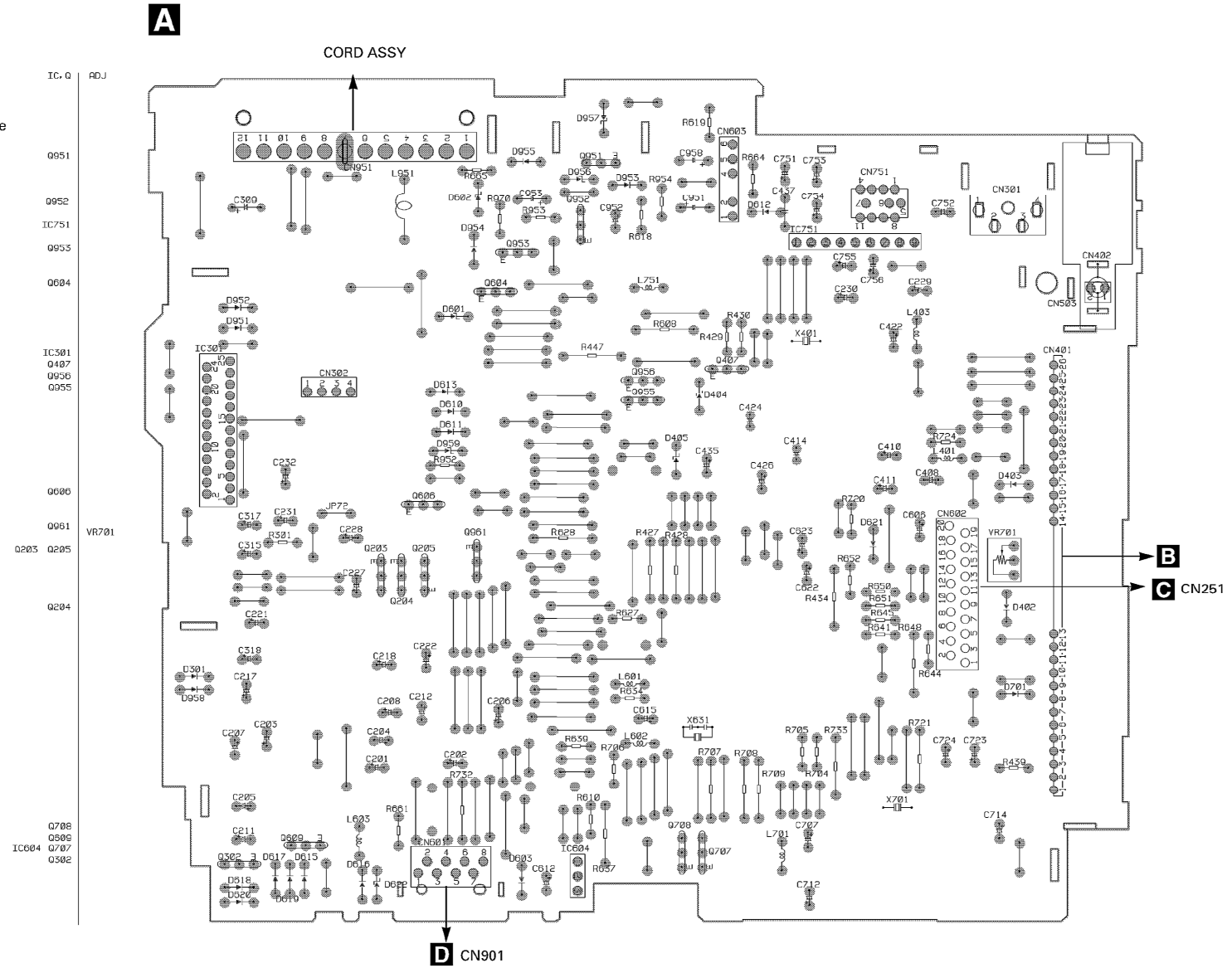

Fig. 15

KEH-P4500R,P4530R,P4510

SIDE B

A

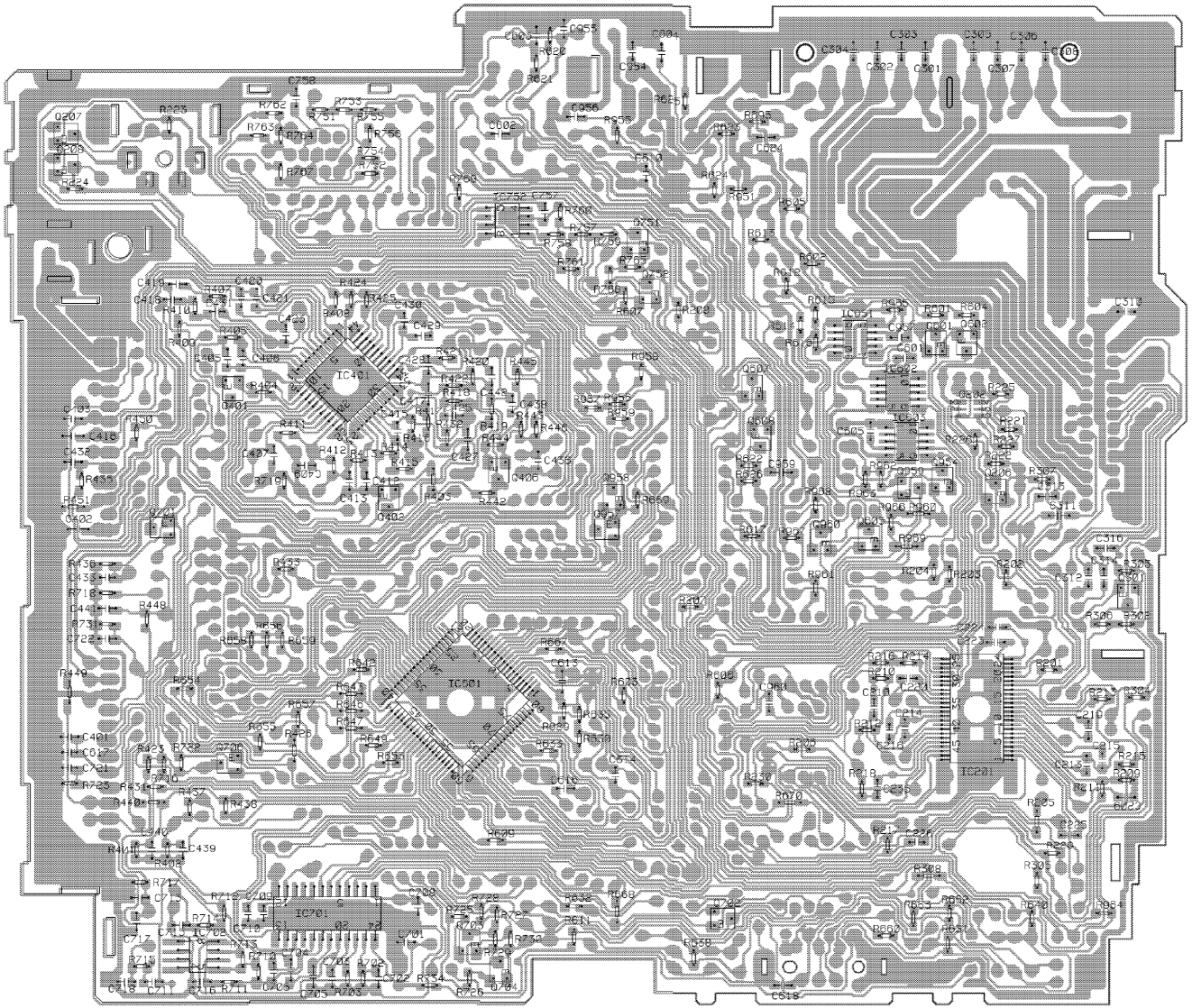

IC, Q

Q207

Q208

IC752

Q751

Q852

Q602
Q601

IC951
IC401 Q607
IC602
Q202
Q401
Q608
IC603

Q959 Q954 Q206
Q406 Q958

Q701 Q957
Q402 Q960 Q605

Q301

IC601

Q706
IC201

Q402
IC701 Q703
IC702

Q704

Fig. 16

4.2 KEYBOARD UNIT

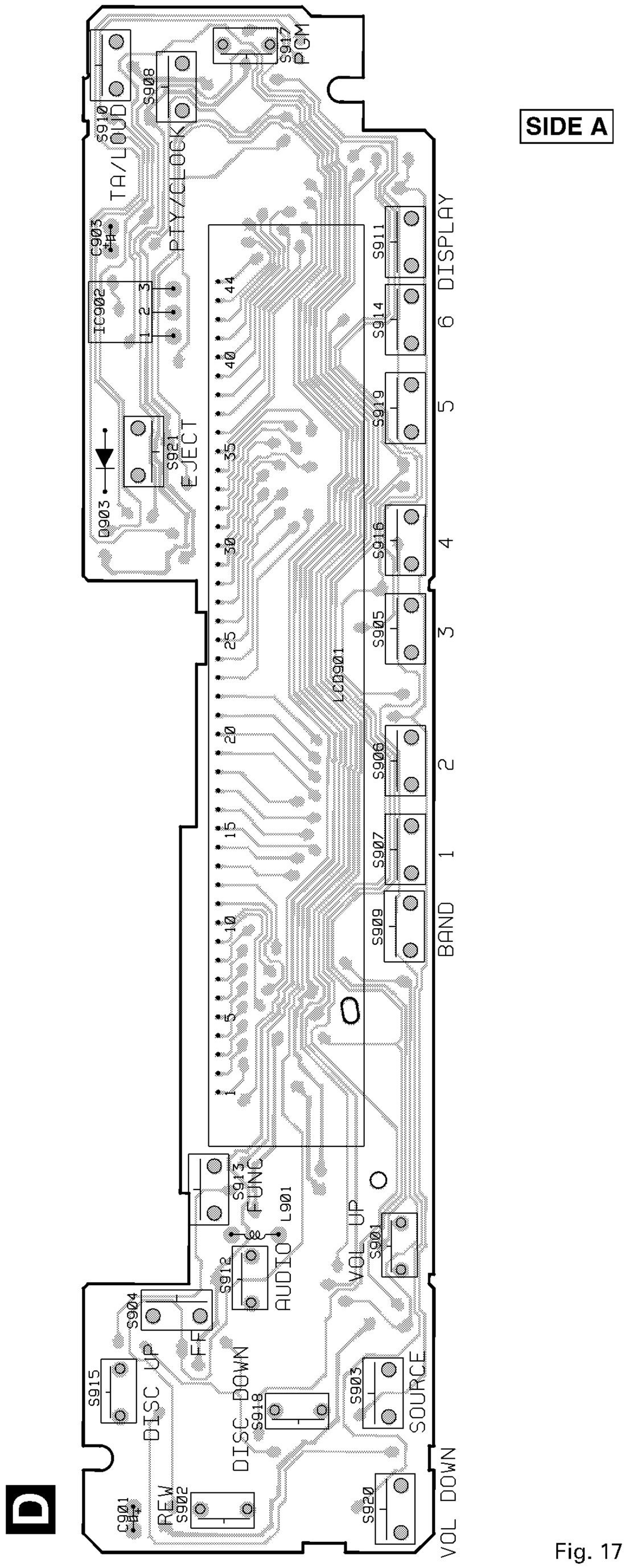

Fig. 17

ClibPDF - www.fastio.com

IC, Q

IC901

SIDE B

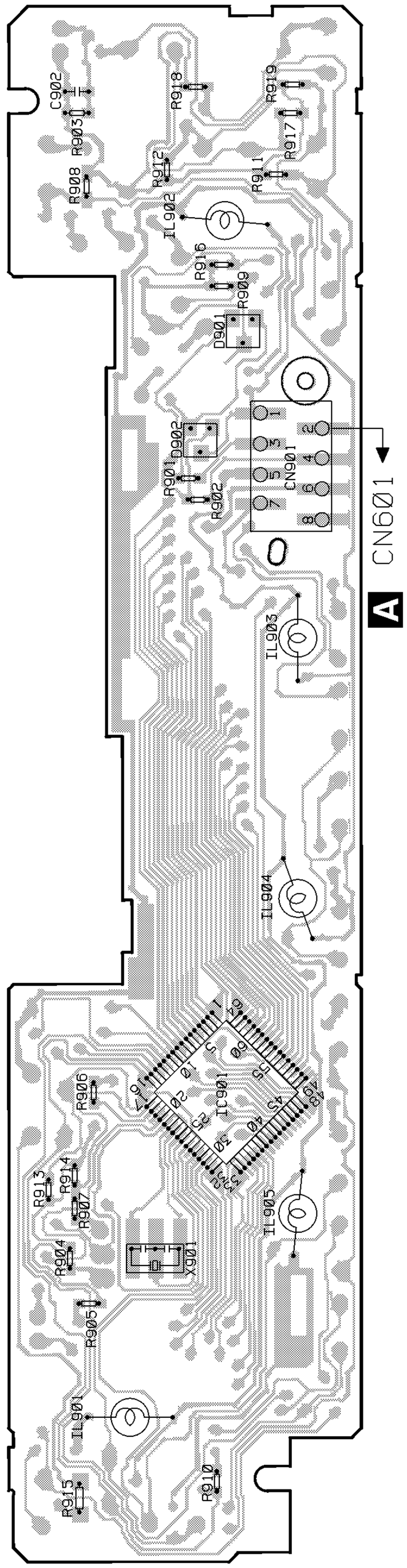

D

Fig. 18

ClibPDF - www.fastio.com

4.3 FM/AM TUNER UNIT (KEH-P4500R/X1M/EW, P4530R/X1M/EW)

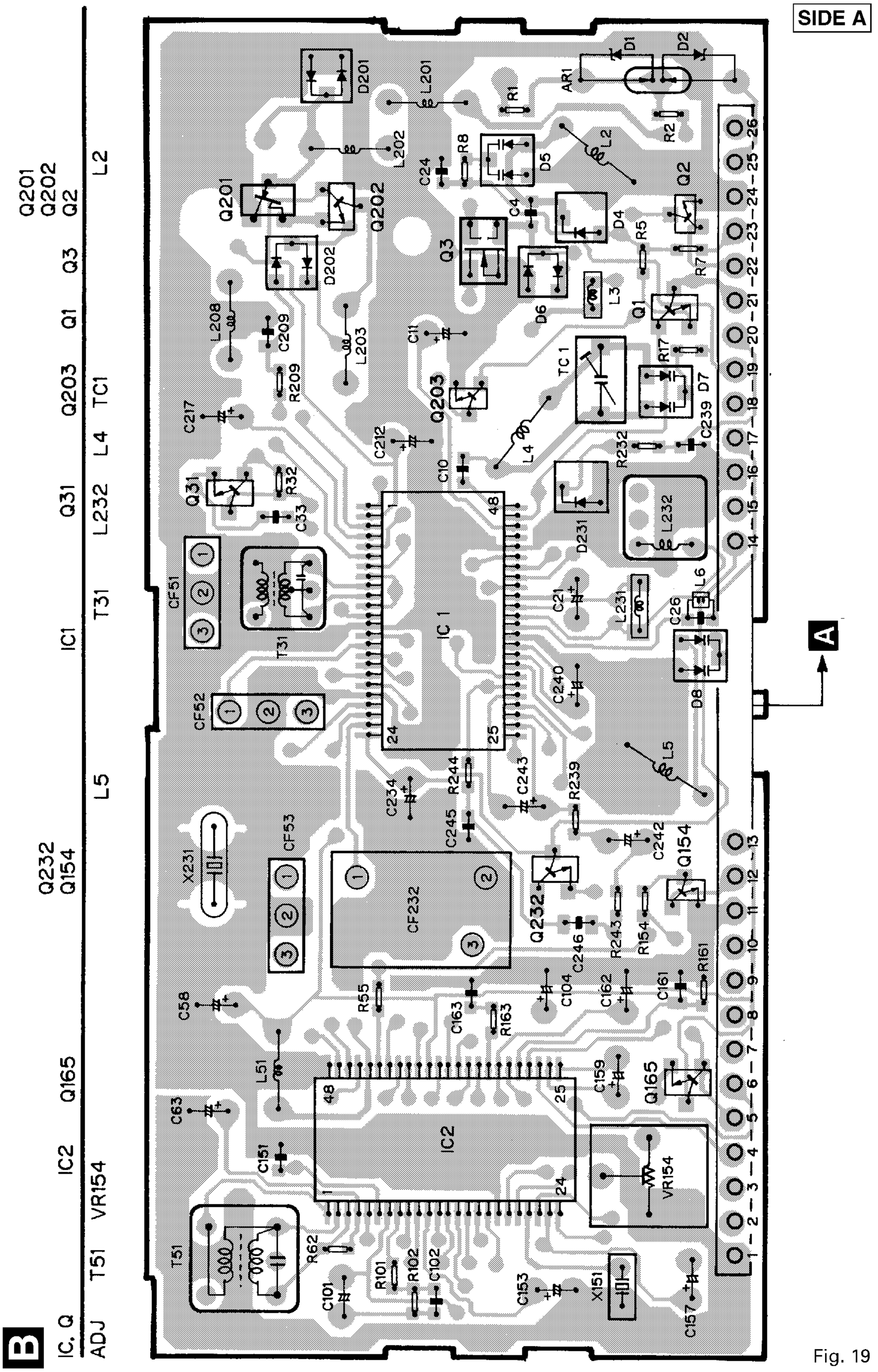

Fig. 19

ClibPDF - www.fastio.com

SIDE B

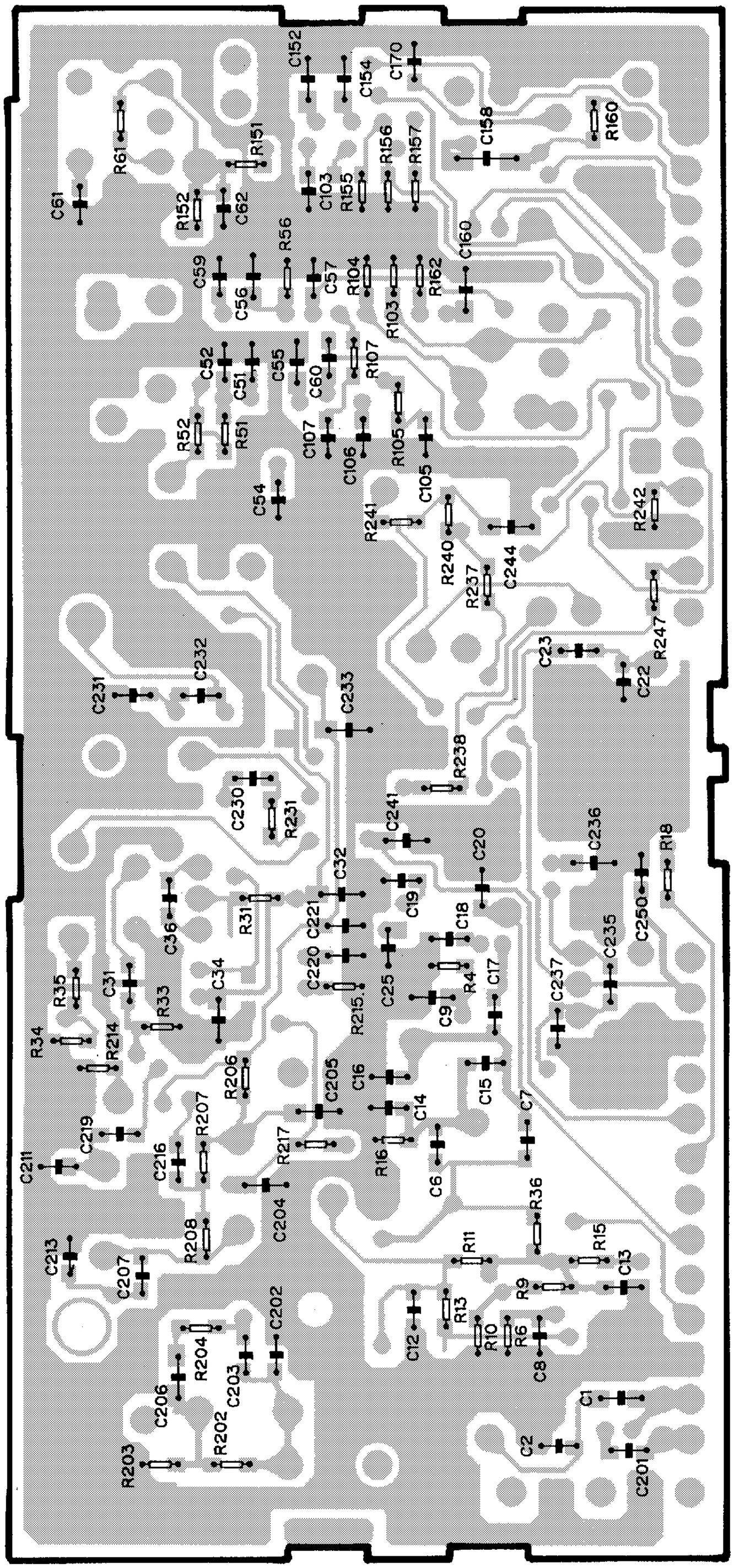
C61
R61
R152
C62
R151
C152
C154
C170
C103
R155
R156
R157
C158
R160
C59
C56
R56
C57
R104
R162
C160
R103
C52
C51
C55
C60
R107
R52
R51
C107
C106
R105
C105
C54
R241
R240
R237
C244
R242
C232
C231
C233
C230
R231
R238
C241
C236
C20
C32
C221
C220
R215
C25
C9
R4
C18
C17
C19
C235
C237
C250
R18
R34
R35
R214
R33
C31
C36
C34
R31
R206
C205
C16
C14
C15
C7
C211
C219
C216
R207
R217
R16
C6
C204
R36
R208
C213
C207
R11
R15
C13
R9
C202
R204
C206
C203
R202
R203
C12
R13
R10
R6
C8
C1
C2
C201
B

Fig. 20

4.4 TUNER UNIT (KEH-P4510/X1M/EE)

SIDE A

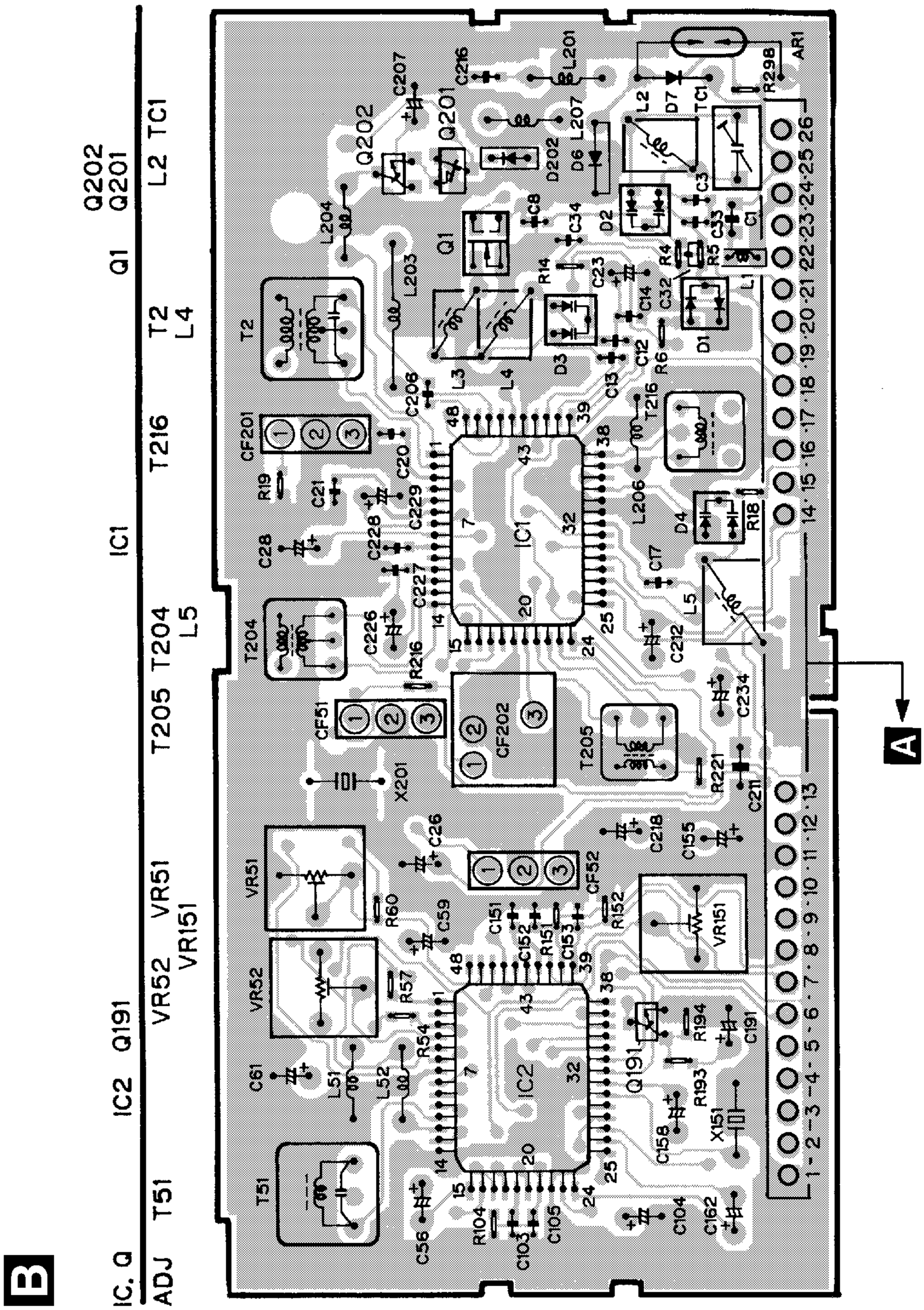

Fig. 21

SIDE B

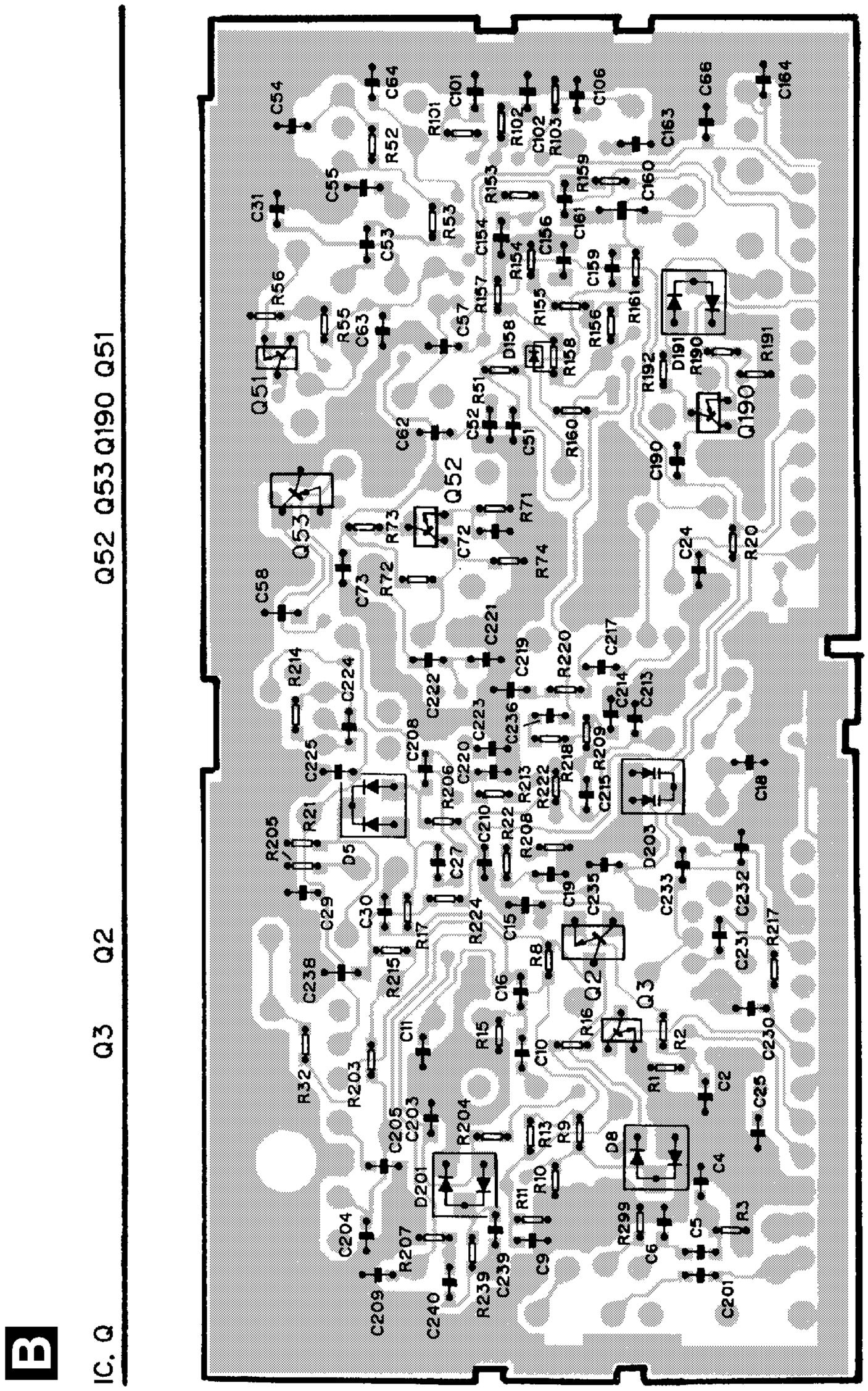

Fig. 22

4.5 CASSETTE MECHANISM MODULE

SIDE A

C DECK UNIT

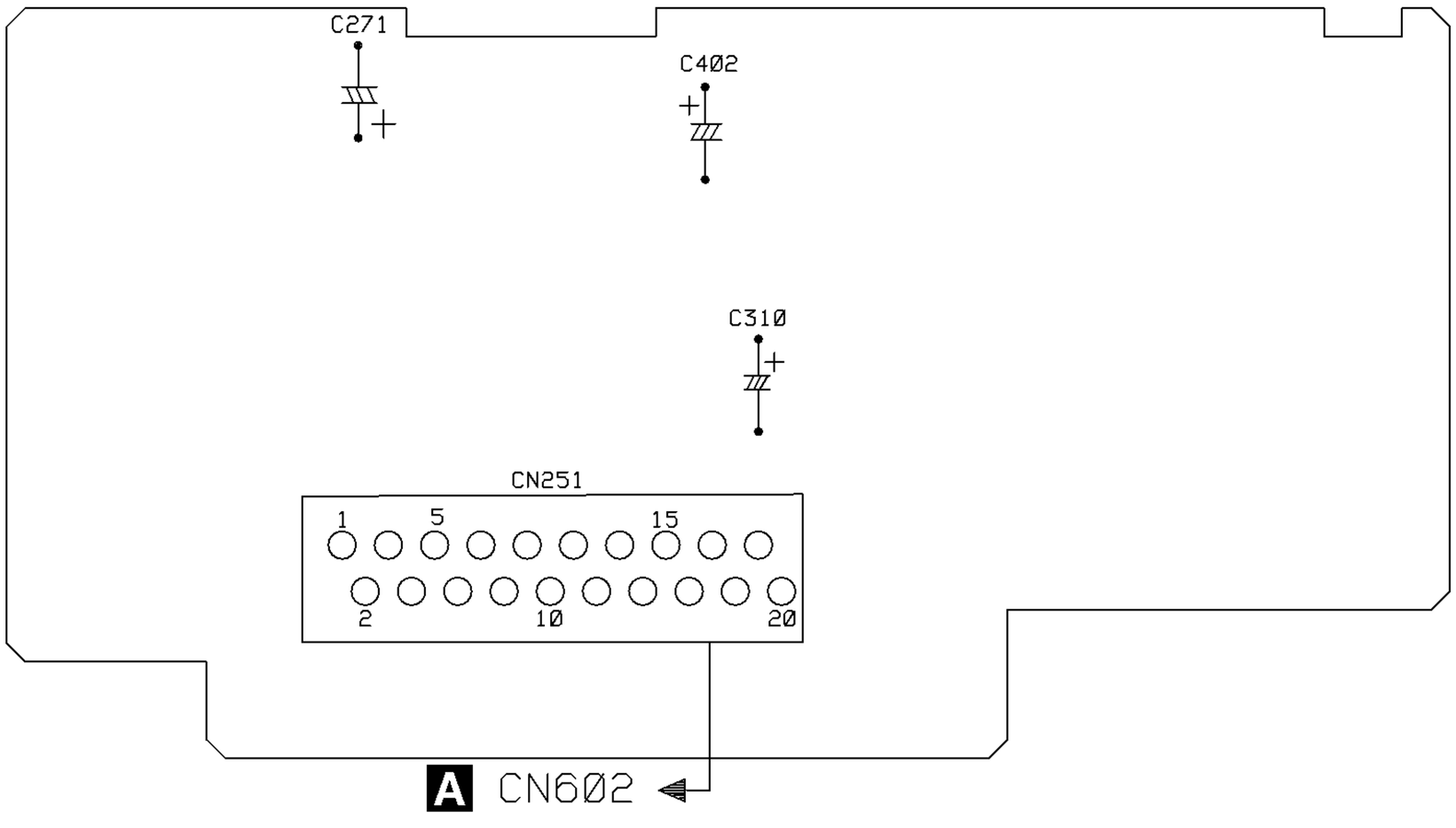

Fig. 23

SIDE B

C DECK UNIT

IC, Q | ADJ

IC351 VR302 Q271 IC251 Q401 Q352 Q351 VR301

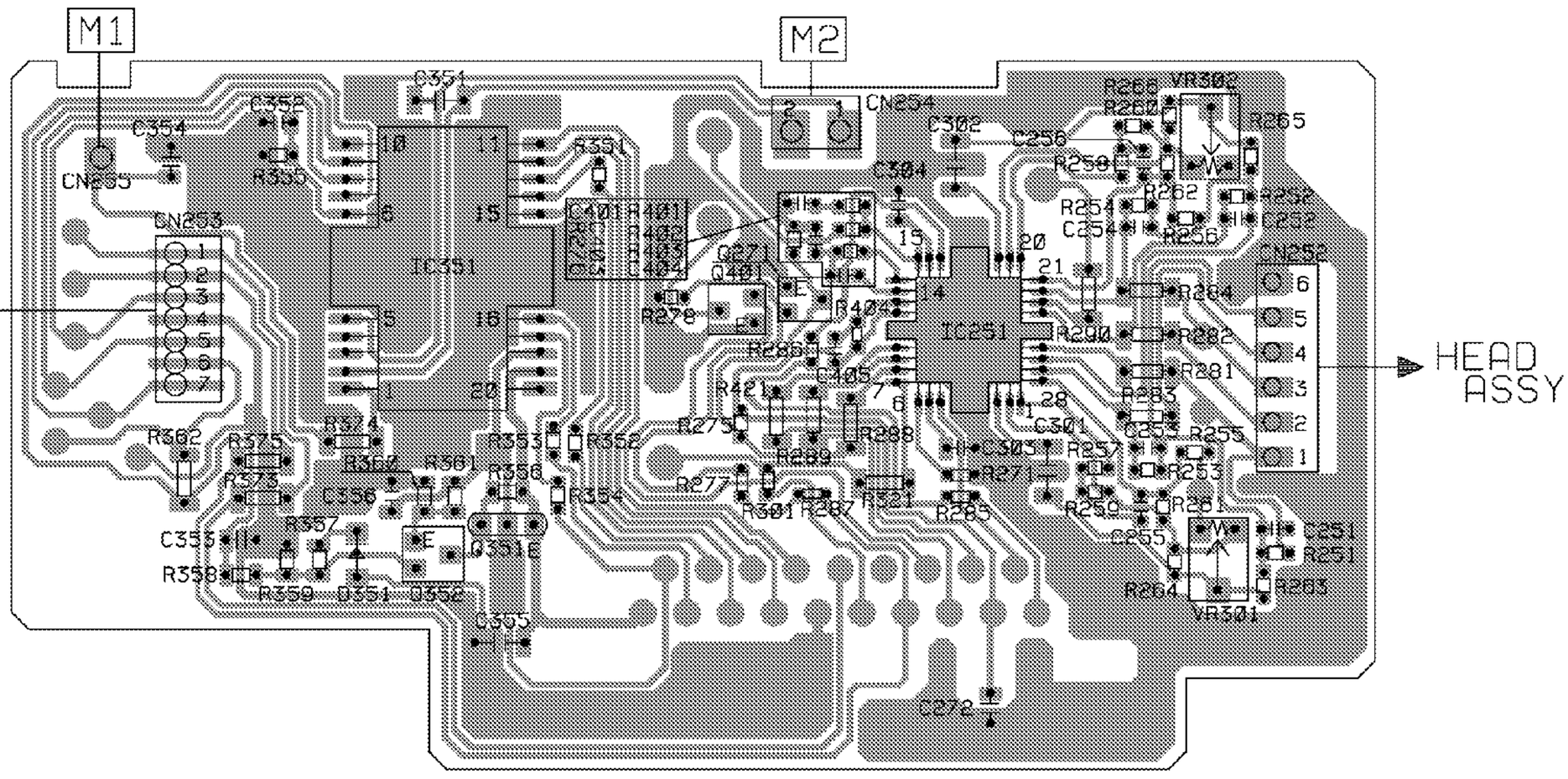

Fig. 24

ClibPDF - www.fastio.com

E PCB UNIT

SIDE A

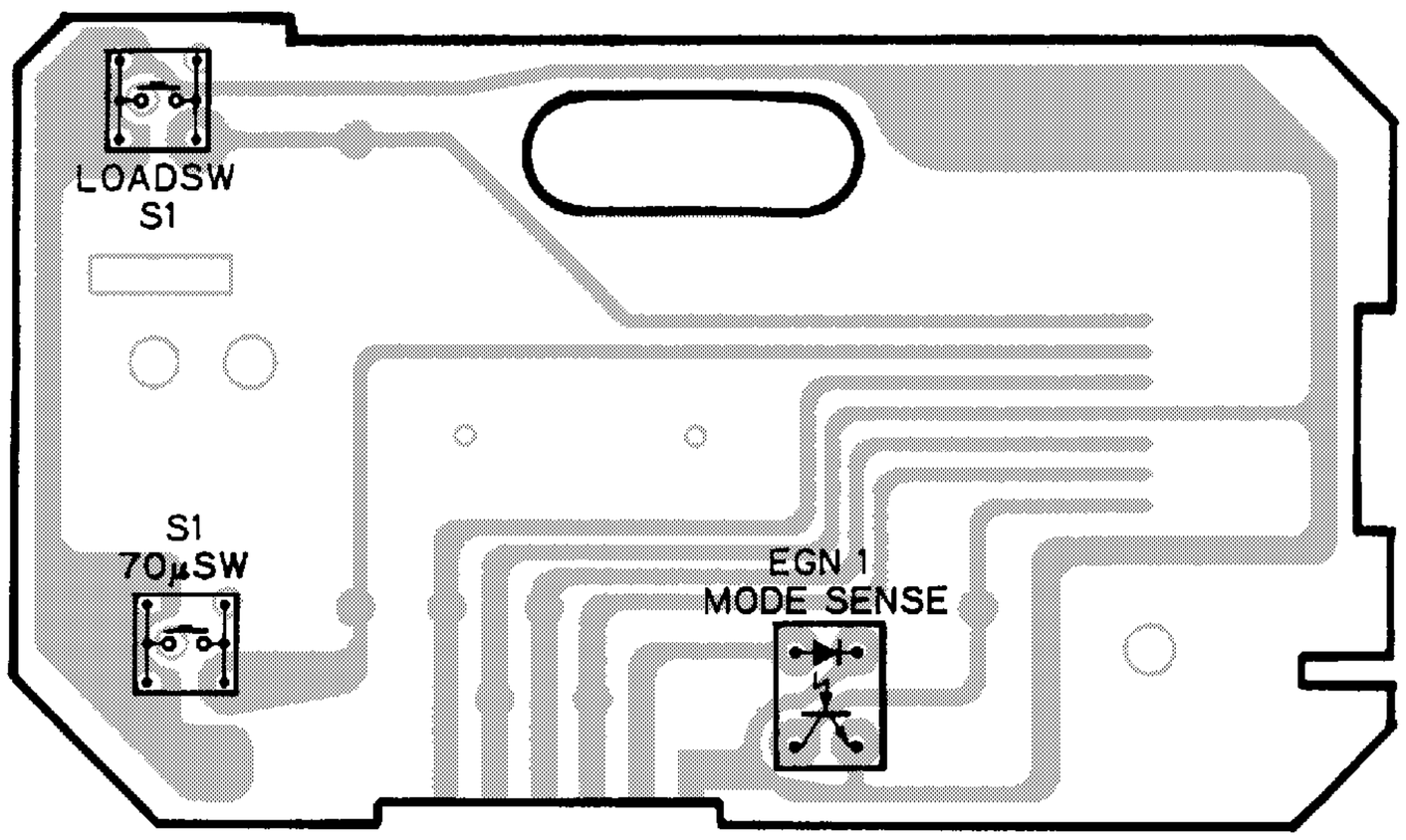

Fig. 25

E PCB UNIT

SIDE B

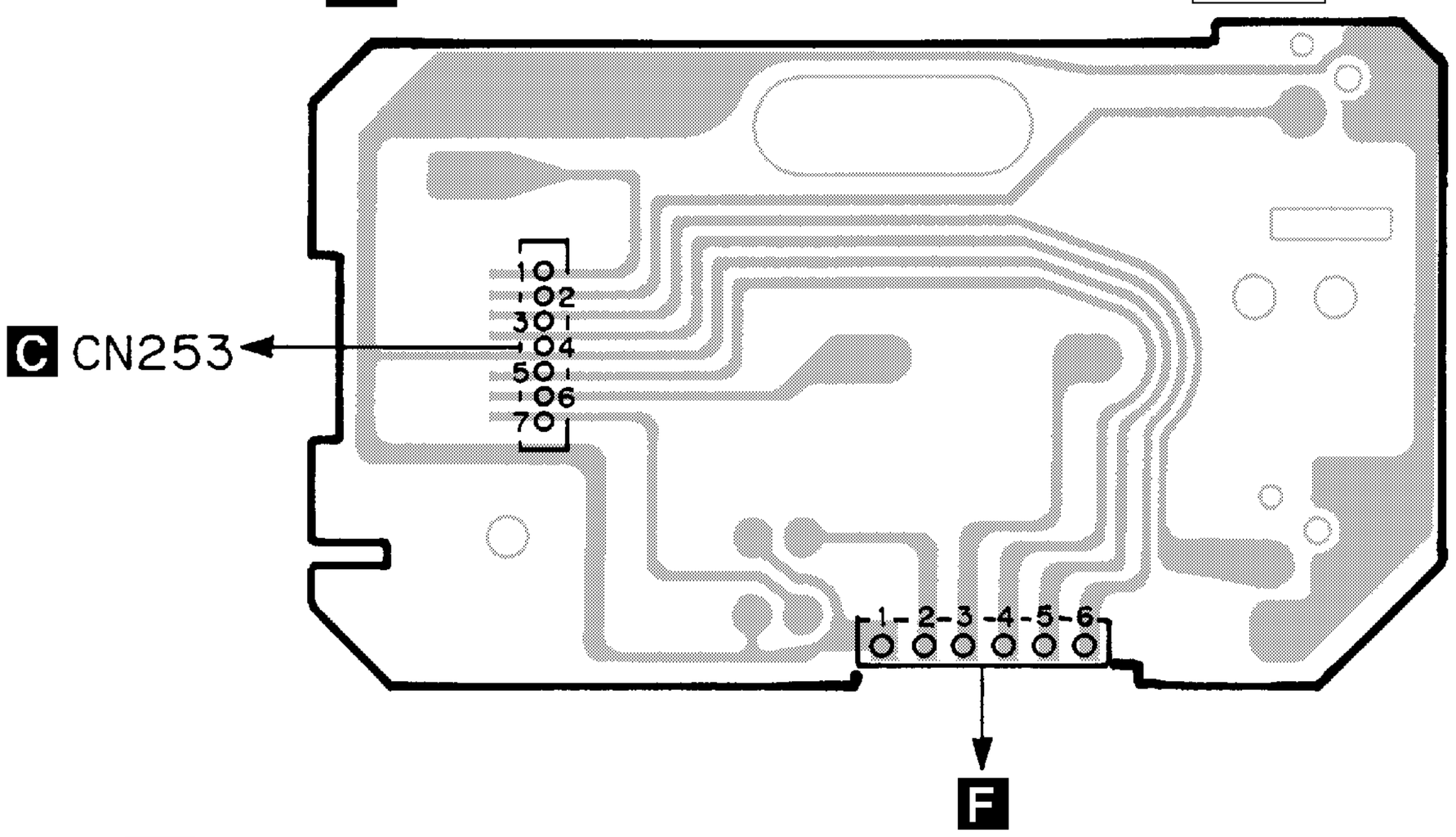

Fig. 26

F REEL PCB

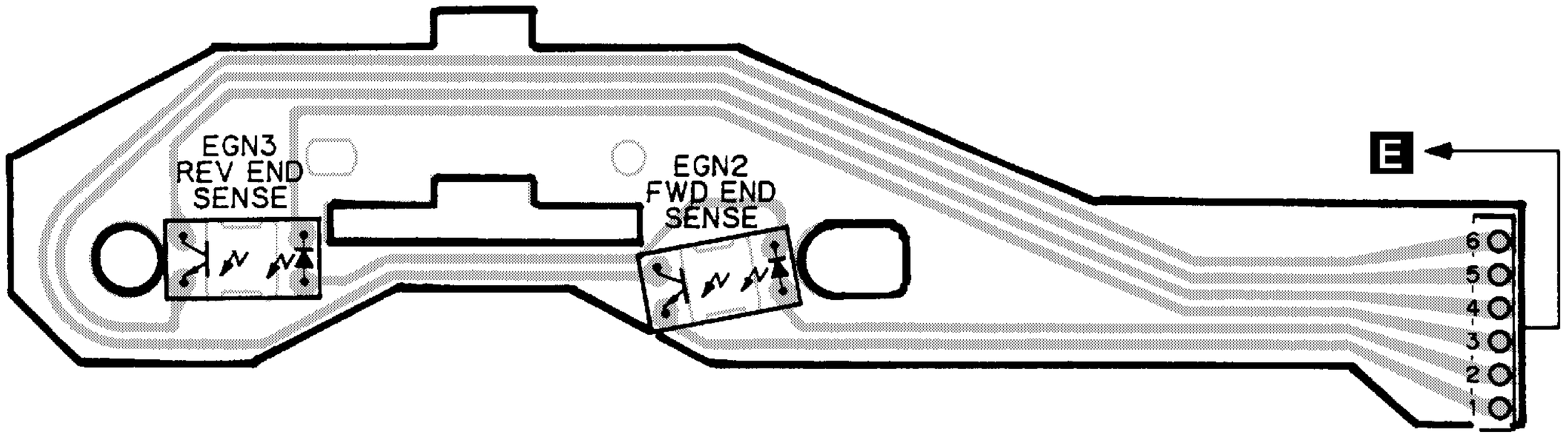

Fig. 27

ClibPDF - www.fastio.com

5. ELECTRICAL PARTS LIST

NOTE:

- Parts whose parts numbers are omitted are subject to being not supplied.
- The part numbers shown below indicate chip components.

Chip Resistor

RS1/○S○○○J,RS1/○○S○○○J

Chip Capacitor (except for CQS.....)

CKS....., CCS....., CSZS.....

B Unit Number : CWE1416(KEH-P4500R/X1M/EW,P4530R/X1M/EW)
Unit Name : FM/AM Tuner Unit

MISCELLANEOUS

=====Circuit Symbol and No.		===Part Name	Part No.
IC	1	IC	PA4023B
IC	2	IC	PA4024A
Q	1	Transistor	2SC2412KLN
Q	2	Transistor	DTC124EU
Q	3	FET	3SK263
Q	31	Transistor	2SC2412KLN
Q	154	Transistor	DTC124EU
Q	165	Transistor	2SC2412KLN
Q	201	FET	2SK932
Q	202	Transistor	2SC2412KLN
Q	203	Transistor	DTC124EU
D	4	Diode	1SV250
D	5	Diode	KV1410-F1
D	6	Diode	MA157
D	7	Diode	KV1410-F1
D	8	Diode	KV1410-F1
D	201	Diode	MA157
D	202	Diode	MA157
D	231	Diode	SVC253
L	2	Coil	CTC1108
L	3	Inductor	LCTB2R2K2125
L	4	Coil	CTC1108
L	5	Coil	CTC1107
L	6	Inductor	LCTBR15K1608
L	51	Ferri-Inductor	LAU150K
L	201	Ferri-Inductor	LAU4R7K
L	202	Ferri-Inductor	LAU330K
L	203	Inductor	CTF1287
L	208	Inductor	LAU121K
L	231	Inductor	LCTA3R3J3225
T	31	Coil	CTE1116
T	51	Coil	CTC1136
TC	1	Capacitor	CCL1038
CF	51	Ceramic Filter	CTF1292
CF	52	Ceramic Filter	CTF1292
CF	53	Ceramic Filter	CTF1292
CF	232	Ceramic Filter	CTF1348
X	151	Resonator 920.5kHz	CSS1365
X	231	Crystal Resonator 10.26MHz	CSS1111
VR	154	Semi-fixed 150kΩ(B)	CCP1213
AR	1	Capacitor with Discharge Gap	DSP-201M

RESISTORS

=====Circuit Symbol and No.		===Part Name	Part No.
R	1		RS1/16S0R0J
R	4		RS1/16S154J
R	5		RS1/16S391J
R	6		RS1/16S223J
R	7		RS1/16S123J
R	8		RS1/16S332J
R	9		RS1/16S473J
R	10		RS1/16S223J
R	11		RS1/16S124J
R	13		RS1/16S563J
R	15		RS1/16S271J
R	16		RS1/16S104J
R	17		RS1/16S332J
R	18		RS1/16S332J
R	31		RS1/16S470J
R	32		RS1/16S822J
R	33		RS1/16S822J
R	34		RS1/16S331J
R	35		RS1/16S331J
R	51		RS1/16S271J
R	52		RS1/16S560J
R	55		RS1/16S102J
R	56		RS1/16S823J
R	61		RS1/16S392J
R	62		RS1/16S393J
R	101		RS1/16S272J
R	102		RS1/16S682J
R	103		RS1/16S333J
R	104		RS1/16S334J
R	105		RS1/16S683J
R	107		RS1/16S222J
R	151		RS1/16S222J
R	152		RS1/16S393J
R	154		RS1/16S104J
R	155		RS1/16S273J
R	156		RS1/16S243J
R	157		RS1/16S203J
R	160		RS1/16S222J
R	161		RS1/16S563J
R	162		RS1/16S105J
R	163		RS1/16S222J
R	202		RS1/16S223J
R	203		RS1/16S225J
R	204		RS1/16S103J
R	206		RS1/16S220J
R	207		RS1/16S101J
R	208		RS1/16S102J
R	209		RS1/16S471J
R	214		RS1/16S822J
R	215		RS1/16S822J
R	217		RS1/16S102J
R	231		RS1/16S272J
R	232		RS1/16S473J
R	237		RS1/16S103J
R	238		RS1/16S104J
R	239		RS1/16S104J
R	240		RS1/16S332J
R	241		RS1/16S202J
R	243		RS1/16S123J
R	244		RS1/16S103J

ClibPDF - www.fastio.com

Circuit Symbol and No.		Part Name	Part No.
R	247		RS1/16S123J
CAPACITORS			
C	1		CCSQCH6R0D50
C	2		CCSRCK2R0C50
C	4		CCSRCH820J50
C	6		CCSRCH820J50
C	8		CKSRYB103K25
C	9		CKSQYB104K16
C	10		CCSRCKR50C50
C	11		CEJA1R0M50
C	12		CKSRYB222K50
C	13		CKSRYB222K50
C	14		CCSRCH220J50
C	16		CCSRCH8R0D50
C	17		CKSRYB222K50
C	18		CKSRYB103K25
C	19		CKSRYB222K50
C	20		CKSRYB222K50
C	21		CEJA100M16
C	22		CCSRTH9R0D50
C	23		CCSRTH120J50
C	24		CCSRCH471J50
C	25		CKSRYB103K25
C	31		CKSRYB103K25
C	32		CKSQYB472K50
C	33		CCSRCH5R0C50
C	34		CKSQYB104K16
C	36		CCSRRH201J50
C	51		CKSRYB223K25
C	52		CKSRYB103K25
C	54		CCSRCH470J50
C	55		CKSQYB223K25
C	56		CKSQYB104K16
C	57		CKSRYB472K50
C	58		CEJA330M10
C	59		CKSRYB103K25
C	61		CCSRCH270J50
C	62		CKSRYB103K25
C	63		CEJAR15M50
C	101		CEJANP100M10
C	102		CKSRYB182K50
C	103		CKSRYB682K25
C	104		CEJA2R2M50
C	105		CKSRYB103K25
C	106		CCSRCH151J50
C	107		CKSRYB103K25
C	151		CKSRYB472K50
C	152		CKSQYB104K16
C	153		CEJA3R3M50
C	154		CKSQYB104K16
C	157		CEJA3R3M50
C	158		CKSYB474K16
C	159		CEJA220M6R3
C	160		CKSQYB104K16
C	161		CKSQYB104K16
C	162		CEJA3R3M50
C	163		CKSRYB102K50
C	170		CCSRCH100D50
C	201		CCSRCH471J50
C	202		CCSRCH100D50
C	203		CKSRYB332K50
C	204		CKSQYB473K16
C	205		CKSQYB473K16
C	206		CKSQYB104K16
C	207		CCSRCH560J50
C	209		CKSQYB104K16
C	211		CCSRCH101J50
C	212		CEJA470M6R3
C	213		CKSRYB103K25
C	216		CCSRCH101J50
C	217		CEJA1R5M50
C	219		CCSRCH471J50
C	220		CKSRYB103K25
C	230		CKSRYB103K25
C	231		CCSRCH330J50
C	232		CCSRCH150J50
C	233		CKSQYB104K16
C	234		CEJA330M10
C	235		CKSRYB332K50
C	236		CKSQYB473K16
C	237		CCSRCH120J50
C	239		CKSRYB472K50
C	240		CEJAR47M50
C	241		CKSQYB104K16
C	242		CEJAR47M50
C	243		CEJAR33M50
C	244		CKSQYB473K16
C	245		CKSRYB123K25
C	246		CKSQYB473K16
C	250		CCSRCH471J50

B Unit Number : CWE1366(KEH-P4510/X1M/EE)
Unit Name : Tuner Unit

MISCELLANEOUS

IC	1	IC	PA2025A
IC	2	IC	PA2026A
Q	1	FET	3SK263
Q	2	Transistor	2SC2712
Q	3	Transistor	DTC124EU
Q	51	Transistor	DTC124TU
Q	52	Transistor	2SC4098
Q	190	Transistor	2SA1586
Q	191	Transistor	2SC2712
Q	201	FET	2SK932
Q	202	Transistor	2SC2712
D	1	Diode	1SV250
D	2	Diode	KV1460-F6
D	3	Diode	KV1460-F6
D	4	Diode	KV1460-F6
D	5	Chip Diode	MA151WK
D	8	Diode	MA157
D	158	Diode	MA110
D	191	Diode	MA157
D	201	Diode	MA157
D	202	Diode	MA110
D	203	Diode	SVC253
L	2	Coil	CTC1112
L	3	Coil	CTC1121
L	4	Coil	CTC1122
L	5	Coil	CTC1111
L	51	Ferri-Inductor	LAU2R2K
L	52	Ferri-Inductor	LAU150K
L	201	Ferri-Inductor	LAU4R7K
L	203	Inductor 1mH	CTF1026
L	204	Ferri-Inductor	LAU151K
L	206	Inductor	LAU3R3J
L	207	Ferri-Inductor	LAU330K
T	2	Coil	CTE1077
T	51	Coil	CTC1119
T	204	Coil	CTE1112
T	205	Coil	CTE1118
CF	51	Ceramic Filter	CTF1290
CF	52	Ceramic Filter	CTF1290
CF	201	Ceramic Filter	CTF1290

ClibPDF - www.fastio.com

=====Circuit Symbol and No.		===Part Name	Part No.
CF	202	Ceramic Filter	CTF1300
X	151	Ceramic Resonator 456kHz	CSS1308
X	201	Crystal Resonator 10.26MHz	CSS1111
VR	51	Semi-fixed 22kΩ(B)	CCP1208
VR	52	Semi-fixed 68kΩ(B)	CCP1211
VR	151	Semi-fixed 10kΩ(B)	CCP1206
AR	1	Capacitor with Discharge Gap	DSP-201M
RESISTORS			
R	1		RS1/16S223J
R	2		RS1/16S331J
R	3		RS1/16S0R0J
R	4		RS1/16S563J
R	5		RS1/16S0R0J
R	6		RS1/16S223J
R	8		RS1/16S271J
R	9		RS1/16S153J
R	10		RS1/16S682J
R	11		RS1/16S474J
R	13		RS1/16S104J
R	14		RS1/16S563J
R	15		RS1/16S563J
R	16		RS1/16S273J
R	17		RS1/16S332J
R	18		RS1/16S223J
R	19		RS1/16S821J
R	20		RS1/16S223J
R	21		RS1/16S332J
R	22		RS1/16S560J
R	32		RS1/16S682J
R	51		RS1/16S391J
R	52		RS1/16S182J
R	53		RS1/16S751J
R	54		RS1/16S563J
R	55		RS1/16S822J
R	56		RS1/16S272J
R	71		RS1/16S182J
R	72		RS1/16S821J
R	73		RS1/16S331J
R	74		RS1/16S681J
R	101		RS1/16S224J
R	102		RS1/16S822J
R	103		RS1/16S563J
R	104		RS1/16S822J
R	153		RS1/16S103J
R	154		RS1/16S223J
R	155		RS1/16S0R0J
R	156		RS1/16S822J
R	157		RS1/16S123J
R	159		RS1/16S103J
R	160		RS1/16S273J
R	161		RS1/16S103J
R	190		RS1/16S473J
R	191		RS1/16S225J
R	192		RS1/16S221J
R	193		RS1/16S224J
R	194		RS1/16S225J
R	203		RS1/16S102J
R	204		RS1/16S222J
R	205		RS1/16S333J
R	206		RS1/16S332J
R	207		RS1/16S225J
R	208		RS1/16S752J
R	209		RS1/16S822J
R	213		RS1/16S222J
R	214		RS1/16S333J
R	215		RS1/16S330J
R	216		RS1/16S152J
R	217		RS1/16S563J

=====Circuit Symbol and No.		===Part Name	Part No.
R	218		RS1/16S333J
R	220		RS1/16S100J
R	221		RS1/16S273J
R	222		RS1/16S822J
R	224		RS1/16S330J
R	239		RS1/16S103J
CAPACITORS			
C	1		CCSQCH220J50
C	2		CKSRYB103K50
C	3		CCSRCK1R0C50
C	8		CKSRYB102K50
C	9		CCSRCH470J50
C	10		CCSRCH6R0D50
C	11		CKSRYB103K50
C	12		CCSRCH100D50
C	13		CCSRCH100D50
C	14		CKSRYB103K50
C	15		CKSQYB104K16
C	16		CCSRCK2R0D50
C	17		CCSRCH180J50
C	18		CCSRCH6R0D50
C	19		CKSRYB103K50
C	20		CKSRYB103K50
C	21		CKSRYB103K50
C	23		CEJA1R0M50
C	24		CKSRYB223K25
C	26		CEJA330M10
C	27		CKSRYB103K50
C	28		CEJA330M10
C	29		CKSRYB103K50
C	30		CKSRYB103K50
C	31		CKSRYB333K16
C	33		CCSRCH7R0D50
C	34		CKSRYB682K50
C	51		CKSRYB103K50
C	52		CKSRYB103K50
C	53		CCSRCH270J50
C	54		CCSRCH270J50
C	55		CKSQYB104K16
C	56		CEJA1R0M50
C	57		CCSRCH101J50
C	58		CKSQYB104K16
C	59		CEJAR47M50
C	61		CEJAR22M50
C	62		CKSRYB103K50
C	63		CKSRYB103K50
C	64		CCSRCH101J50
C	66		CCSRCH101J50
C	72		CCSRCH181J50
C	73		CKSRYB333K16
C	101		CKSQYB104K16
C	102		CKSQYB473K16
C	103		CKSRYB222K50
C	104		CEJA1R0M50
C	105		CKSRYB222K50
C	106		CKSRYB223K25
C	151		CKSRYB103K50
C	152		CKSRYB223K25
C	153		CKSRYB223K25
C	154		CKSQYB473K16
C	155		CEJAR68M50
C	156		CKSQYB473K16
C	158		CEJA100M16
C	159		CCSRCH271J50
C	160		CKSYB105K16
C	161		CKSQYB104K16
C	162		CEJA1R0M50

ClibPDF - www.fastio.com

=====Circuit Symbol and No.		===Part Name	Part No.
C	163		CKSQYB473K16
C	164		CKSRYB103K50
C	190		CKSRYB223K25
C	191		CEAL150M10
C	201		CCSRCH471J50
C	203		CKSQYB473K16
C	204		CCSRCH151J50
C	205		CCSRCH680J50
C	206		CKSRYB222K50
C	207		CEJA101M16
C	208		CKSRYB102K50
C	209		CKSRYB103K50
C	210		CKSRYB103K50
C	211		CKSYB105K16
C	212		CEJA330M10
C	213		CKSRYB223K25
C	214		CKSRYB472K50
C	215		CKSRYB103K50
C	216		CCSRCH100D50
C	217		CCSRCH221J50
C	218		CEJA4R7M35
C	219		CKSQYB473K16
C	220		CKSRYB103K50
C	221		CCSRCH680J50
C	222		CCSRCH150J50
C	223		CKSRYB103K50
C	224		CCSRUJ181J50
C	225		CKSRYB103K50
C	226		CEJA4R7M35
C	227		CKSRYB103K50
C	228		CKSRYB103K50
C	229		CEJAR68M50
C	230		CKSRYB472K50
C	232		CCSRTH220J50
C	233		CKSRYB332K50
C	234		CEJA220M6R3
C	235		CKSRYB103K50
C	236		CKSRYB223K25
C	238		CKSQYB473K16
C	239		CKSRYB332K50
C	240		CKSRYB103K50

A Unit Number : CWM5653
(KEH-P4500R/X1M/EW,P4530R/X1M/EW)
Unit Name : Tuner Amp Unit

MISCELLANEOUS

IC	201	IC	SN761027DL
IC	301	IC	TDA7384A
IC	401	IC	PM2007A
IC	601	IC	PD4873A
IC	604	IC	S-80734AN
IC	701	IC	PM4006B
IC	702	IC	NJM2903M
IC	751	IC	TA2050S
IC	752	IC	HA12187FP
IC	951	IC	TPD1018F
Q	206	Transistor	DTA124EK
Q	207	Transistor	DTC143TK
Q	208	Transistor	DTC143TK
Q	301	Transistor	DTC124EK
Q	302	Transistor	2SC1740S
Q	401	Transistor	2SC2412K
Q	601	Transistor	2SC2412K
Q	602	Transistor	2SC2412K
Q	609	Transistor	2SA933S
Q	701	Transistor	DTC143TK
Q	702	Transistor	DTC114EK
Q	703	Transistor	2SD1757K
Q	704	Transistor	2SD1757K
Q	706	Transistor	2SC2412K
Q	707	Transistor	DTC143TS

=====Circuit Symbol and No.		===Part Name	Part No.
Q	708	Transistor	DTC143TS
Q	751	Transistor	2SA1037K
Q	752	Transistor	DTC114EK
Q	951	Transistor	2SD2396
Q	952	Transistor	2SD2037
Q	953	Transistor	2SA933S
Q	954	Transistor	DTC114EK
Q	955	Transistor	2SA1674
Q	956	Transistor	2SA1048
Q	957	Transistor	DTC114TK
Q	958	Transistor	DTC114TK
Q	959	Transistor	2SC2412K
Q	960	Transistor	DTC114TK
Q	961	Transistor	2SB1243
D	301	Diode	1SS270
D	403	Diode	1SS270
D	601	Diode	HZS7L(C2)
D	602	Diode	HZS7L(A1)
D	603	Diode	1SS270
D	615	Diode	1SS270
D	616	Diode	1SS270
D	617	Diode	1SS270
D	618	Diode	1SS270
D	619	Diode	1SS270
D	620	Diode	1SS270
D	621	Diode	1SS270
D	622	Diode	HZS7L(A1)
D	701	Diode	1SS270
D	951	Diode	1SR139-400
D	952	Diode	1SR139-400
D	953	Diode	1SR139-400
D	954	Diode	1SR139-400
D	955	Diode	1SR139-400
D	956	Diode	HZS6L(B2)
D	957	Diode	HZS9L(B3)
D	958	Diode	1SS270
D	959	Diode	HZS9L(A2)
L	401	Ferri-Inductor	LAU2R2K
L	403	Ferri-Inductor	LAU2R2K
L	601	Ferri-Inductor	LAU2R2K
L	602	Ferri-Inductor	LAU2R2K
L	603	Ferri-Inductor	LAU2R2K
L	701	Ferri-Inductor	LAU101K
L	751	Ferri-Inductor	LAU2R2K
L	951		CTH1171
X	401	Crystal Resonator 7.200MHz	CSS1379
X	631	Ceramic Resonator 6.29MHz	CSS1310
X	701	Crystal Resonator 4.332MHz	CSS1056
VR	701	Semi-fixed 22kΩ(B)	CCP1321

RESISTORS

R	201		RS1/10S821J
R	202		RS1/10S821J
R	205		RS1/8S333J
R	206		RS1/10S333J
R	207		RS1/10S152J
R	208		RS1/10S152J
R	209		RS1/10S272J
R	210		RS1/10S272J
R	211		RS1/10S151J
R	212		RS1/10S151J
R	213		RS1/10S221J
R	214		RS1/10S221J
R	215		RS1/10S104J
R	216		RS1/10S104J
R	223		RS1/10S473J
R	224		RS1/10S473J
R	229		RS1/10S392J
R	230		RS1/10S392J
R	301		RD1/4PU103J
R	302		RS1/10S221J
R	303		RS1/10S153J
R	304		RS1/10S103J
R	305		RS1/10S152J
R	306		RS1/10S101J
R	307		RS1/10S562J

ClibPDF - www.fastio.com

=====Circuit Symbol and No.	===Part Name	Part No.
R 308		RS1/8S223J
R 401		RS1/10S272J
R 402		RS1/10S272J
R 403		RS1/8S102J
R 404		RS1/10S222J
R 405		RS1/10S222J
R 407		RS1/10S0R0J
R 408		RS1/10S562J
R 409		RS1/10S222J
R 410		RS1/10S102J
R 411		RS1/10S682J
R 412		RS1/10S472J
R 413		RS1/10S222J
R 414		RS1/10S682J
R 415		RS1/10S472J
R 416		RS1/10S561J
R 417		RS1/10S103J
R 418		RS1/10S152J
R 419		RS1/8S222J
R 420		RS1/10S392J
R 421		RS1/10S272J
R 422		RS1/10S392J
R 423		RS1/10S473J
R 424		RS1/10S473J
R 425		RS1/10S472J
R 426		RS1/8S473J
R 427		RD1/4PU102J
R 428		RD1/4PU102J
R 429		RD1/4PU102J
R 430		RD1/4PU102J
R 431		RS1/10S472J
R 433		RS1/10S104J
R 434		RD1/4PU222J
R 435		RS1/10S103J
R 436		RS1/10S393J
R 439		RD1/4PU0R0J
R 440		RS1/8S0R0J
R 448		RS1/10S102J
R 449		RS1/8S0R0J
R 450		RS1/10S680J
R 451		RS1/8S0R0J
R 601		RS1/10S223J
R 602		RS1/10S473J
R 603		RS1/10S473J
R 604		RS1/10S223J
R 605		RS1/10S473J
R 606		RS1/10S473J
R 607		RS1/10S0R0J
R 609		RS1/10S0R0J
R 629		RS1/10S0R0J
R 631		RS1/10S473J
R 633		RS1/10S473J
R 637		RD1/4PU102J
R 638		RS1/10S124J
R 639		RD1/4PU222J
R 640		RS1/10S223J
R 641		RD1/4PU222J
R 642		RS1/10S103J
R 643		RS1/8S222J
R 646		RS1/8S222J
R 647		RS1/8S222J
R 648		RD1/4PU222J
R 649		RS1/10S222J
R 650		RD1/4PU222J
R 651		RD1/4PU222J
R 652		RD1/4PU222J
R 653		RS1/10S222J
R 654		RS1/10S473J
R 655		RS1/10S473J
R 656		RS1/10S473J
R 657		RS1/10S473J
R 658		RS1/10S473J
R 659		RS1/10S392J
R 660		RS1/10S472J
R 661		RD1/4PU472J

=====Circuit Symbol and No.	===Part Name	Part No.
R 662		RS1/10S222J
R 663		RS1/10S222J
R 665		RD1/4PU102J
R 667		RS1/10S102J
R 668		RS1/8S0R0J
R 669		RS1/10S473J
R 670		RS1/8S0R0J
R 695		RS1/10S472J
R 702		RS1/10S333J
R 703		RS1/10S0R0J
R 704		RD1/4PU102J
R 705		RD1/4PU102J
R 706		RD1/4PU102J
R 707		RD1/4PU102J
R 708		RD1/4PU102J
R 709		RD1/4PU102J
R 710		RS1/10S222J
R 711		RS1/10S222J
R 712		RS1/10S681J
R 713		RS1/10S684J
R 714		RS1/10S562J
R 715		RS1/10S562J
R 716		RS1/10S104J
R 717		RS1/10S104J
R 718		RS1/10S103J
R 719		RS1/10S473J
R 720		RD1/4PU102J
R 721		RD1/4PU102J
R 722		RS1/10S562J
R 723		RS1/10S105J
R 724		RD1/4PU0R0J
R 725		RS1/10S224J
R 726		RS1/10S224J
R 727		RS1/10S222J
R 728		RS1/10S222J
R 729		RS1/10S223J
R 730		RS1/10S223J
R 731		RS1/10S224J
R 732		RD1/4PU152J
R 733		RD1/4PU102J
R 734		RS1/10S0R0J
R 751		RS1/10S181J
R 752		RS1/10S181J
R 753		RS1/10S223J
R 754		RS1/10S223J
R 755		RS1/10S102J
R 756		RS1/10S102J
R 757		RS1/10S102J
R 758		RS1/10S102J
R 759		RS1/10S473J
R 760		RS1/10S473J
R 761		RS1/10S102J
R 762		RS1/10S101J
R 763		RS1/10S101J
R 764		RS1/10S620J
R 765		RS1/10S223J
R 766		RS1/10S472J
R 767		RS1/10S222J
R 768		RS1/10S0R0J
R 951		RS1/10S473J
R 952		RD1/4PU102J
R 953		RD1/4PU471J
R 954		RD1/4PU101J
R 955		RS1/10S472J
R 956		RS1/10S473J
R 957		RS1/10S102J
R 958		RS1/10S473J
R 959		RS1/10S102J
R 960		RS1/8S103J
R 961		RS1/10S1R0J
R 962		RS1/10S103J
R 963		RS1/10S223J
R 964		RS1/10S152J
R 965		RS1/10S0R0J
R 967		RS1/10S473J
R 968		RS1/10S102J
R 970		RD1/4PU152J

ClibPDF - www.fastio.com

=====Circuit Symbol and No.		===Part Name	Part No.
CAPACITORS			
C	201		CEJA2R2M50
C	202		CEJA2R2M50
C	203		CEJA1R0M50
C	204		CEJA1R0M50
C	205		CEJA4R7M35
C	206		CEJA4R7M35
C	207		CEJA100M16
C	208		CEJA100M16
C	209		CKSQYB822K50
C	210		CKSQYB822K50
C	211		CEJA1R0M50
C	212		CEJA1R0M50
C	213		CKSQYB183K25
C	214		CKSQYB183K25
C	215		CKSQYB102K50
C	216		CKSQYB102K50
C	217		CEJA2R2M50
C	218		CEJA2R2M50
C	219		CKSQYB333K25
C	220		CKSQYB333K25
C	221		CEJA220M10
C	222		CEJA220M10
C	223		CKSQYF104Z25
C	226		CKSQYB102K50
C	229		CEJA2R2M50
C	230		CEJA2R2M50
C	309	3300µF/16V	CCH1018
C	310		CKSQYB104K16
C	311		CKSYB224K16
C	312		CKSQYB224K16
C	313		CKSQYB224K16
C	314		CKSQYB224K16
C	315		CEJA100M16
C	316		CKSQYB224K16
C	317		CEJA1R0M50
C	318		CEJA330M10
C	401		CKSQYB223K25
C	402		CKSYB273K25
C	406		CCSQSL101J50
C	407		CKSQYB102K50
C	408		CEJA220M16
C	409		CKSQYB103K25
C	410		CEJA220M6R3
C	411		CEJA220M16
C	412		CKSQYB103K25
C	413		CKSQYB103K25
C	414	4.7µF/16V	CCH1250
C	415		CKSQYB103K25
C	416		CKLSR473K16
C	418		CKSQYB103K25
C	420		CKSQYB103K25
C	421		CKSQYB103K25
C	422		CEJA220M6R3
C	423		CKSQYB102K50
C	424	4.7µF/16V	CCH1250
C	425		CKSQYB103K25
C	426		CEJAR47M50
C	428		CKSQYB103K25
C	429		CCSQCH150J50
C	430		CCSQCH150J50
C	431		CCSQSL101J50
C	432		CKSQYB103K25
C	439		CKSQYB223K25
C	440		CKSQYB223K25
C	441		CKSQYB223K25
C	442		CKSQYB102K50
C	606		CEJA100M16
C	612		CEAL2R2M50
C	613		CKSYB102K50
C	614		CCSQSL101J50
C	615		CEJA4R7M35
C	616		CKSQYB103K25
C	622		CEJA220M10
C	624		CKSQYB102K50
C	701		CKSQYF104Z25
C	702		CKSQYB222K50
C	703		CKSQYB104K16
C	704		CKSYB105K16
C	705		CKSYB104K16
C	706		CKSQYB472K50
C	707		CEJA4R7M35
C	708		CKSQYB104K16
C	709		CCSQCH220J50
C	710		CCSQCH220J50
C	711		CKSQYB104K16
C	712		CEJA4R7M35
C	713		CKSQYB223K25
C	714		CEJA4R7M35
C	715		CKSQYB103K25
C	716		CKSQYB103K25
C	721		CKSQYB471K50
C	722		CKSQYB223K25
C	723		CEAL2R2M50
C	724		CEJA2R2M50
C	751		CEJA1R0M50
C	752		CEJA1R0M50
C	753		CEJA1R0M50
C	754		CEJA1R0M50
C	755		CEJA100M16
C	756		CEJA100M16
C	757		CKSQYB102K50
C	758		CKSQYB104K16
C	951	470µF/16V	CCH1183
C	952		CEJA470M10
C	953		CEAS101M10
C	954		CKSQYB103K25
C	956		CKSQYB103K25
C	957		CKSQYB103K25
C	958		CEAS101M10
C	959		CKSYB103K50

A Unit Number : CWM5655(KEH-P4510/X1M/EE)
Unit Name : Tuner Amp Unit

MISCELLANEOUS

IC	201	IC	SN761027DL
IC	301	IC	TDA7384A
IC	401	IC	PM2006A
IC	601	IC	PD4874A
IC	604	IC	S-80734AN
IC	751	IC	TA2050S
IC	752	IC	HA12187FP
IC	951	IC	TPD1018F
Q	206	Transistor	DTA124EK
Q	207	Transistor	DTC143TK
Q	208	Transistor	DTC143TK
Q	301	Transistor	DTC124EK
Q	302	Transistor	2SC1740S
Q	401	Transistor	2SC2412K
Q	406	Transistor	2SC2412K
Q	407	Transistor	2SK330
Q	601	Transistor	2SC2412K
Q	602	Transistor	2SC2412K
Q	609	Transistor	2SA933S
Q	751	Transistor	2SA1037K
Q	752	Transistor	DTC114EK
Q	951	Transistor	2SD2396
Q	952	Transistor	2SD2037
Q	953	Transistor	2SA933S
Q	954	Transistor	DTC114EK
Q	955	Transistor	2SA1674
Q	956	Transistor	2SA1048
Q	957	Transistor	DTC114TK
Q	958	Transistor	DTC114TK
Q	959	Transistor	2SC2412K
Q	960	Transistor	DTC114TK
Q	961	Transistor	2SB1243
D	301	Diode	1SS270
D	402	Diode	1SS270
D	403	Diode	1SS270

ClibPDF - www.fastio.com

=====Circuit Symbol and No.	===	Part Name	Part No.
D	404	Diode	RD3R0ES(B2)
D	405	Diode	HZS9L(B3)
D	601	Diode	HZS7L(C2)
D	602	Diode	HZS7L(A1)
D	603	Diode	1SS270
D	615	Diode	1SS270
D	616	Diode	1SS270
D	617	Diode	1SS270
D	618	Diode	1SS270
D	619	Diode	1SS270
D	620	Diode	1SS270
D	621	Diode	1SS270
D	622	Diode	HZS7L(A1)
D	951	Diode	1SR139-400
D	952	Diode	1SR139-400
D	953	Diode	1SR139-400
D	954	Diode	1SR139-400
D	955	Diode	1SR139-400
D	956	Diode	HZS6L(B2)
D	957	Diode	HZS9L(B3)
D	958	Diode	1SS270
D	959	Diode	HZS9L(A2)
L	401	Ferri-Inductor	LAU2R2K
L	403	Ferri-Inductor	LAU2R2K
L	601	Ferri-Inductor	LAU2R2K
L	602	Ferri-Inductor	LAU2R2K
L	603	Ferri-Inductor	LAU2R2K
L	751	Ferri-Inductor	LAU2R2K
L	951		CTH1171
X	401	Crystal Resonator 7.200MHz	CSS1379
X	631	Ceramic Resonator 4.194MHz	CSS1047

RESISTORS

R	201	RS1/10S821J
R	202	RS1/10S821J
R	205	RS1/8S333J
R	206	RS1/10S333J
R	207	RS1/10S152J
R	208	RS1/10S152J
R	209	RS1/10S272J
R	210	RS1/10S272J
R	211	RS1/10S151J
R	212	RS1/10S151J
R	213	RS1/10S221J
R	214	RS1/10S221J
R	223	RS1/10S473J
R	224	RS1/10S473J
R	229	RS1/10S392J
R	230	RS1/10S392J
R	301	RD1/4PU103J
R	302	RS1/10S221J
R	303	RS1/10S153J
R	304	RS1/10S103J
R	305	RS1/10S152J
R	306	RS1/10S101J
R	307	RS1/10S562J
R	308	RS1/8S223J
R	401	RS1/10S162J
R	402	RS1/10S162J
R	404	RS1/10S222J
R	405	RS1/10S222J
R	407	RS1/10S0R0J
R	408	RS1/10S562J
R	409	RS1/10S222J
R	410	RS1/10S102J
R	411	RS1/10S472J
R	412	RS1/10S152J
R	413	RS1/10S472J
R	417	RS1/10S562J
R	418	RS1/10S222J
R	420	RS1/10S392J
R	421	RS1/10S102J
R	422	RS1/10S392J
R	423	RS1/10S472J
R	424	RS1/10S473J
R	425	RS1/10S472J
R	426	RS1/8S473J
R	427	RD1/4PU102J

=====Circuit Symbol and No.	===	Part Name	Part No.
R	428		RD1/4PU102J
R	429		RD1/4PU102J
R	430		RD1/4PU102J
R	431		RS1/10S472J
R	432		RS1/10S0R0J
R	433		RS1/10S104J
R	434		RD1/4PU222J
R	435		RS1/10S0R0J
R	436		RS1/10S683J
R	437		RS1/10S0R0J
R	438		RS1/10S0R0J
R	439		RD1/4PU102J
R	440		RS1/8S102J
R	442		RS1/10S102J
R	443		RS1/10S102J
R	444		RS1/10S102J
R	445		RS1/10S102J
R	446		RS1/10S102J
R	447		RD1/4PU391J
R	448		RS1/10S472J
R	449		RS1/8S0R0J
R	450		RS1/10S680J
R	601		RS1/10S223J
R	602		RS1/10S473J
R	603		RS1/10S473J
R	604		RS1/10S223J
R	605		RS1/10S473J
R	606		RS1/10S473J
R	608		RD1/4PU0R0J
R	610		RD1/4PU0R0J
R	629		RS1/10S0R0J
R	631		RS1/10S473J
R	633		RS1/10S473J
R	637		RD1/4PU102J
R	638		RS1/10S124J
R	639		RD1/4PU222J
R	640		RS1/10S223J
R	641		RD1/4PU222J
R	642		RS1/10S103J
R	643		RS1/8S222J
R	646		RS1/8S222J
R	647		RS1/8S222J
R	648		RD1/4PU222J
R	649		RS1/10S222J
R	650		RD1/4PU222J
R	651		RD1/4PU222J
R	652		RD1/4PU222J
R	653		RS1/10S222J
R	654		RS1/10S473J
R	655		RS1/10S473J
R	656		RS1/10S473J
R	657		RS1/10S473J
R	658		RS1/10S473J
R	659		RS1/10S392J
R	660		RS1/10S472J
R	661		RD1/4PU472J
R	662		RS1/10S222J
R	663		RS1/10S222J
R	665		RD1/4PU102J
R	667		RS1/10S102J
R	668		RS1/8S0R0J
R	670		RS1/8S0R0J
R	695		RS1/10S472J
R	717		RS1/10S473J
R	719		RS1/10S473J
R	751		RS1/10S181J
R	752		RS1/10S181J
R	753		RS1/10S223J
R	754		RS1/10S223J
R	755		RS1/10S102J
R	756		RS1/10S102J
R	757		RS1/10S102J
R	758		RS1/10S102J
R	759		RS1/10S473J
R	760		RS1/10S473J

ClibPDF - www.fastio.com

=====Circuit Symbol and No.		===Part Name	Part No.
R	761		RS1/10S102J
R	762		RS1/10S101J
R	763		RS1/10S101J
R	764		RS1/10S620J
R	765		RS1/10S223J
R	766		RS1/10S472J
R	767		RS1/10S222J
R	768		RS1/10S0R0J
R	951		RS1/10S473J
R	952		RD1/4PU102J
R	953		RD1/4PU471J
R	954		RD1/4PU101J
R	955		RS1/10S472J
R	956		RS1/10S473J
R	957		RS1/10S102J
R	958		RS1/10S473J
R	959		RS1/10S102J
R	960		RS1/8S103J
R	961		RS1/10S1R0J
R	962		RS1/10S103J
R	963		RS1/10S223J
R	964		RS1/10S152J
R	965		RS1/10S0R0J
R	967		RS1/10S473J
R	968		RS1/10S102J
R	970		RD1/4PU152J
CAPACITORS			
C	201		CEJA2R2M50
C	202		CEJA2R2M50
C	203		CEJA1R0M50
C	204		CEJA1R0M50
C	205		CEJA4R7M35
C	206		CEJA4R7M35
C	207		CEJA100M16
C	208		CEJA100M16
C	209		CKSQYB822K50
C	210		CKSQYB822K50
C	211		CEJA1R0M50
C	212		CEJA1R0M50
C	213		CKSQYB183K25
C	214		CKSQYB183K25
C	215		CKSQYB102K50
C	216		CKSQYB102K50
C	217		CEJA2R2M50
C	218		CEJA2R2M50
C	219		CKSQYB333K25
C	220		CKSQYB333K25
C	221		CEJA220M10
C	222		CEJA220M10
C	223		CKSQYF104Z25
C	229		CEJA2R2M50
C	230		CEJA2R2M50
C	309	3300µF/16V	CCH1018
C	310		CKSQYB104K16
C	311		CKSYB224K16
C	312		CKSQYB224K16
C	313		CKSQYB224K16
C	314		CKSQYB224K16
C	315		CEJA100M16
C	316		CKSQYB224K16
C	317		CEJA1R0M50
C	318		CEJA330M10
C	401		CKSQYB223K25
C	402		CKSYB273K25
C	406		CCSQSL101J50
C	407		CKSQYB102K50
C	408		CEJA220M16
C	409		CKSQYB103K25
C	410		CEJA220M6R3
C	411		CEJA220M16
C	412		CKSQYB103K25
C	413		CKSQYB103K25
C	416		CKLSR473K16
C	418		CKSQYB103K25
C	420		CKSQYB103K25
C	421		CKSQYB103K25
C	422		CEJA220M6R3

=====Circuit Symbol and No.		===Part Name	Part No.
C	423		CKSQYB102K50
C	424	4.7µF/16V	CCH1250
C	425		CKSQYB103K25
C	426		CEJAR68M50
C	429		CCSQCH150J50
C	430		CCSQCH150J50
C	431		CCSQSL101J50
C	432		CKSQYB103K25
C	435		CEJA101M10
C	436		CKSQYB103K25
C	437		CFTLA474J50
C	438		CKSQYB103K25
C	441		CKSQYB473K16
C	442		CKSQYB102K50
C	606		CEJA100M16
C	612		CEAL2R2M50
C	614		CCSQSL101J50
C	615		CEJA4R7M35
C	616		CKSQYB103K25
C	623		CEJA220M10
C	624		CKSQYB102K50
C	751		CEJA1R0M50
C	752		CEJA1R0M50
C	753		CEJA1R0M50
C	754		CEJA1R0M50
C	755		CEJA100M16
C	756		CEJA100M16
C	757		CKSQYB102K50
C	758		CKSQYB104K16
C	951	470µF/16V	CCH1183
C	952		CEJA470M10
C	953		CEAS101M10
C	954		CKSQYB103K25
C	956		CKSQYB103K25
C	957		CKSQYB103K25
C	958		CEAS101M10
C	959		CKSYB103K50
C	960		CKSQYB223K25

D Unit Number : CWM5656(KEH-P4500R/X1M/EW)
Unit Name : Keyboard Unit

MISCELLANEOUS

IC	901	IC	PD6195A
IC	902	IC	SBX8035-H
D	901	Chip Diode	MA151WK
D	902	Diode	MA151WA
D	903	LED	See Contrast table
L	901	Ferri-Inductor	LAU101K
X	901	Ceramic Resonator 4.97MHz	CSS1422
S	901	Switch	CSG1081
S	902	Switch	CSG1081
S	903	Push Switch	CSG1093
S	904	Push Switch	CSG1093
S	905	Push Switch	CSG1093
S	906	Push Switch	CSG1093
S	907	Push Switch	CSG1093
S	908	Push Switch	CSG1093
S	909	Push Switch	CSG1093
S	910	Push Switch	CSG1093
S	911	Push Switch	CSG1093
S	912	Switch	CSG1081
S	913	Push Switch	CSG1093
S	914	Push Switch	CSG1093
S	915	Switch	CSG1081
S	916	Push Switch	CSG1093
S	917	Switch	CSG1081
S	918	Switch	CSG1081
S	919	Push Switch	CSG1093
S	920	Push Switch	CSG1093
S	921	Push Switch	CSG1093
IL	901	Lamp 14V 40mA	See Contrast table
IL	902	Lamp 14V 40mA	See Contrast table

ClibPDF - www.fastio.com

=====Circuit Symbol and No.		===Part Name	Part No.
IL	903	Lamp 14V 40mA	See Contrast table
IL	904	Lamp 14V 40mA	See Contrast table
IL	905	Lamp 14V 40mA	See Contrast table
LCD	901	LCD	See Contrast table
RESISTORS			
R	901		RS1/10S222J
R	902		RS1/10S222J
R	903		RS1/10S472J
R	904		RS1/10S121J
R	905		RS1/10S470J
R	906		RS1/10S470J
R	907		RS1/10S2R2J
R	908		RS1/10S473J
R	909		RS1/10S473J
R	910		RS1/10S473J
R	911		RS1/10S473J
R	912		RS1/10S473J
R	913		RS1/10S473J
R	915		RS1/4S821J
CAPACITORS			
C	901		CEAL100M16
C	902		CKSQYF104Z25
C	903		CEAL100M16

C Unit Number : EWM10102
Unit Name : Deck Unit

MISCELLANEOUS			
IC	251	IC	HA12197F
IC	351	IC	PA2020A
Q	351	Transistor	2SB1260
Q	352	Transistor	2SC4102
Q	401	Transistor	DTC114EU
D	351	Diode	1SS355
RESISTORS			
R	255		RS1/16S181J
R	256		RS1/16S181J
R	257		RS1/16S183J
R	258		RS1/16S183J
R	259		RS1/16S133J
R	260		RS1/16S133J
R	261		RS1/16S274J
R	262		RS1/16S274J
R	263		RS1/16S163J
R	264		RS1/16S163J
R	265		RS1/16S163J
R	266		RS1/16S163J
R	271		RS1/16S183J
R	281		RS1/8S0R0J
R	282		RS1/8S0R0J
R	283		RS1/8S0R0J
R	284		RS1/8S0R0J
R	285		RS1/16S0R0J
R	286		RS1/16S0R0J
R	289		RS1/8S0R0J
R	290		RS1/8S0R0J
R	351		RS1/16S102J
R	352		RS1/16S102J
R	353		RS1/16S102J
R	354		RS1/16S102J

=====Circuit Symbol and No.		===Part Name	Part No.
R	355		RS1/10S274J
R	356		RS1/10S202J
R	357		RS1/10S472J
R	358		RS1/10S103J
R	359		RS1/10S103J
R	360		RS1/10S102J
R	361		RS1/10S622J
R	362		RS1/8S181J
R	373		RS1/8S0R0J
R	374		RS1/8S0R0J
R	375		RS1/8S0R0J
R	401		RS1/16S123J
R	402		RS1/16S332J
R	403		RS1/16S911J
R	404		RS1/16S274J
R	421		RS1/8S0R0J
CAPACITORS			
C	251		CKSRYB391K50
C	252		CKSRYB391K50
C	253		CKSRYB391K50
C	254		CKSRYB391K50
C	255		CKSRYB103K50
C	256		CKSRYB103K50
C	271		CEJA1R0M50
C	272		CKSQYB104K16
C	301		CKSYB474K16
C	302		CKSYB474K16
C	303		CKSQYB104K16
C	304		CKSQYB104K16
C	351		CKSYB224K25
C	352		CKSQYB392K50
C	353		CKSQYB103K50
C	354		CKSQYB473K50
C	355		CKSYB104K50
C	356		CKSQYB103K50
C	401		CKSRYB472K50
C	402		CEJA1R0M50
C	403		CKSRYB223K25
C	404		CKSRYB103K50
C	405		CKSRYB333K16

E Unit Number :
Unit Name : PCB Unit

S	1	Switch (Load)	ESG1004
S	2	Switch (70µS)	ESG1004
EGN	1	Photo-Interrupter	EGN1005

F Unit Number :
Unit Name : Reel PCB

EGN	2	Photo-Interrupter	EGN1006
EGN	3	Photo-Interrupter	EGN1006

Miscellaneous Parts List

M	1	Motor Unit (Main)	EXA1464
M	2	Motor Unit (Sub)	EXA1485
HD	1	Head Assy	EXA1506

ClibPDF - www.fastio.com

CONTRAST TABLE of KEYBOARD UNIT

KEH-P4500R/X1M/EW,KEH-P4530R/X1M/EW and KEH-P4510/X1M/EE have the same construction except for the following:

Symbol and Description		Part No.		
		KEH-P4500R/X1M/EW	KEH-P4530R/X1M/EW	KEH-P4510/X1M/EE
Keyboard Unit		CWM5656	CWM5657	CWM5658
D 903	Diode	QLMP-6577	QLMJ-P014	QLMP-6577
IL 901,902	Lamp 14V 40mA	CEL1547	CEL1477	CEL1547
IL 903,904,905	Lamp 14V 40mA	CEL1549	CEL1508	CEL1549
LCD 901	LCD	CAW1383	CAW1391	CAW1410

ClibPDF - www.fastio.com

6. ADJUSTMENT

● Connection Diagram (KEH-P4500R/X1M/EW, P4530R/X1M/EW)

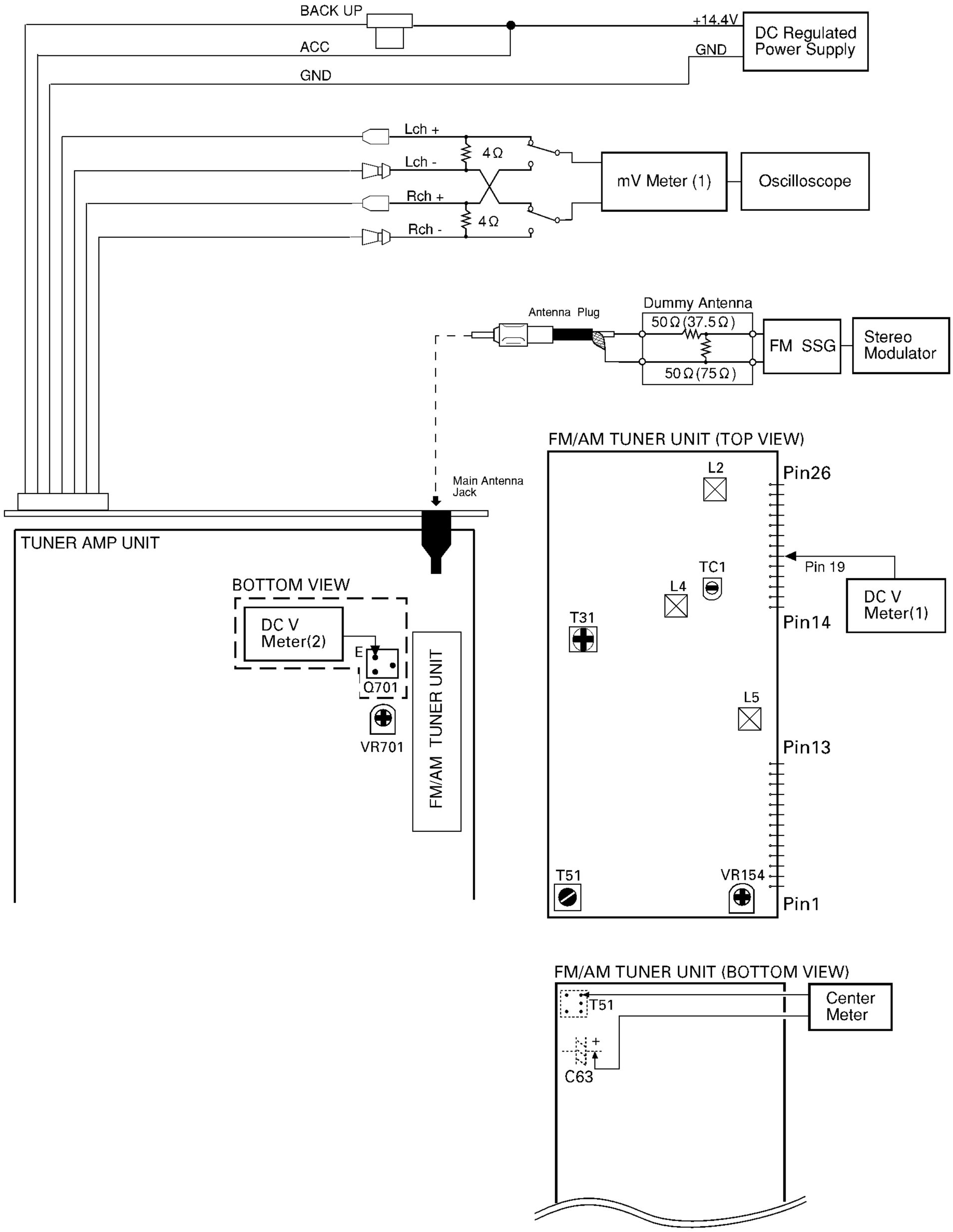

Fig. 28

ClibPDF - www.fastio.com

● **KEH-P4500R/X1M/EW, P4530R/X1M/EW**

FM ADJUSTMENT

Modulation M:MONO MOD., 400Hz 30%(22.5kHz Dev.) or 400Hz 100%(75kHz Dev.)
S1:STEREO MOD., 1kHz, L or R=30%(20.25kHz+7.5kHz Dev.)
S2:STEREO MOD., 400Hz, L or R=60%(40.50kHz+7.5kHz Dev.)

NOTE:Before proceeding to further adjustments after switching power ON, let the tuner run for ten minutes to allow the circuits to stabilize.

	No.	FM SSG		Displayed	Adjustment	Adjustment Method
		Frequency(MHz)	Level(dBf)	Frequency(MHz)	Point	(Switch Position)
TUN Volt	1	•••••	•••••	108.0	L5	DC V Meter(1) : 6V
IF	2	98.1 M	60	98.1	T51	Center Meter : 0
ANT Coil	3	98.1 M	5	98.1	L2	mV Meter(1) : Maximum
RF Coil	4	98.1 M	5	98.1	L4	mV Meter(1) : Maximum
Image	5	129.3 M	60—80	107.9	TC1	mV Meter(1) : Minimum
IFT	6	98.1 M	5	98.1	T31	mV Meter(1) : Maximum (STEREO MODE)
ARC	7	98.1 S1	40	98.1	VR154	mV Meter(1) : Separation 5dB (STEREO MODE)

RDS SL ADJUSTMENT

	No.	FM SSG		Displayed	Adjustment	Adjustment Method
		Frequency(MHz)	Level(dBf)	Frequency(MHz)	Point	(Switch Position)
	1	104.0 S2	35	104.0	VR701	DC V Meter(2) : 1.75V±0.05V

● **For Repair of the Detach Grille Assy, Use the Extension-Cord Tool GGD1056.**

● **For Repair of the Cassette Mechanism Module, Use the Extension-Cord Tool GGD1121.**

ClibPDF - www.fastio.com

● Connection Diagram (KEH-P4510/X1M/EE)

NOTE:

Select C1 so that total capacity of 80pF is attained from the direction of the receiver jack.

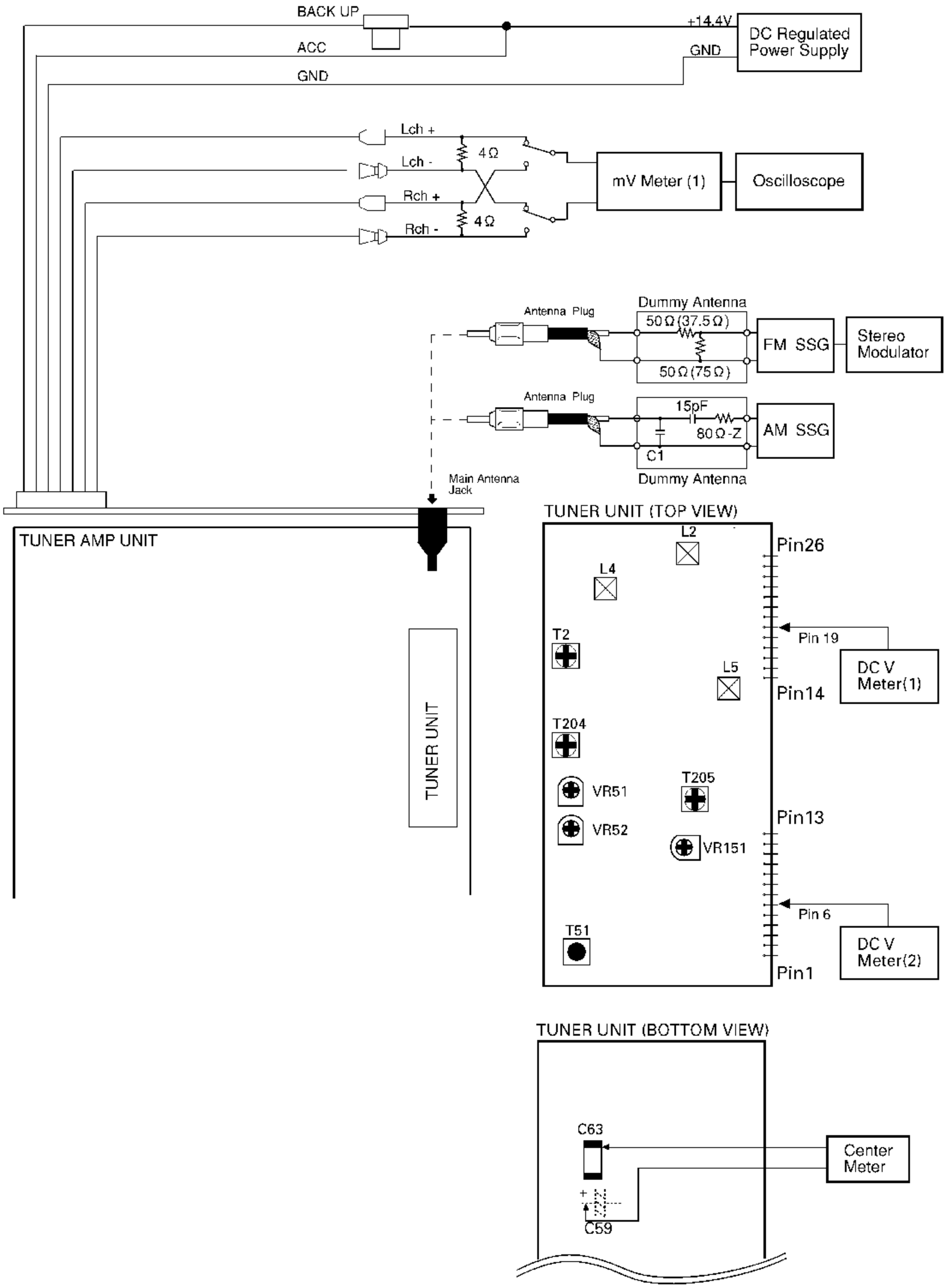

Fig. 29

ClibPDF - www.fastio.com

● **KEH-P4510/X1M/EE**

FM ADJUSTMENT

Modulation M:MONO MOD., 400Hz 30%(22.5kHz Dev.) or 400Hz 100%(75kHz Dev.)
S:STEREO MOD., 1kHz, L or R=100%(67.5kHz+7.5kHz Dev.)

NOTE:Before proceeding to further adjustments after switching power ON, let the tuner run for ten minutes to allow the circuits to stabilize.

	No.	FM SSG		Displayed	Adjustment	Adjustment Method
		Frequency(MHz)	Level(dBf)	Frequency(MHz)	Point	(Switch Position)
TUN Volt	1	108.0 M	65	108.0	L5	DC V Meter(1) : 8.0V±0.1V
IF	1	98.1 M	65	98.1	T51	Center Meter : 0
ANT,RF	1	106.1 M	10	106.1 M	L2,L4	mV Meter(1) : Maximum
IFT	1	98.1 M	10	98.1	T2	mV Meter(1) : Maximum (STEREO MODE)
Soft Mute	1	98.1 M	65	98.1	——	mV Meter(1) : Maximum (STEREO MODE)
	2	98.1 M	10	98.1	VR52	mV Meter(1) : A-3dB
ARC	1	98.1 S	40	98.1	VR151	mV Meter(1) : Separation 5dB
SD	1	98.1 S	22	98.1	VR51	DC V Meter(2) : Approx. 5V

AM ADJUSTMENT

	No.	AM SSG		Displayed	Adjustment	Adjustment Method
		Frequency(MHz)	Level(dBf)	Frequency(MHz)	Point	(Switch Position)
IF	1	999	20	999	T204,T205	mV Meter(1) : Maximum

● **For Repair of the Detach Grille Assy, Use the Extension-Cord Tool GGD1056.**

● **For Repair of the Cassette Mechanism Module, Use the Extension-Cord Tool GGD1121.**

ClibPDF - www.fastio.com

7. GENERAL INFORMATION

7.1 PARTS

7.1.1 IC

PA4023B

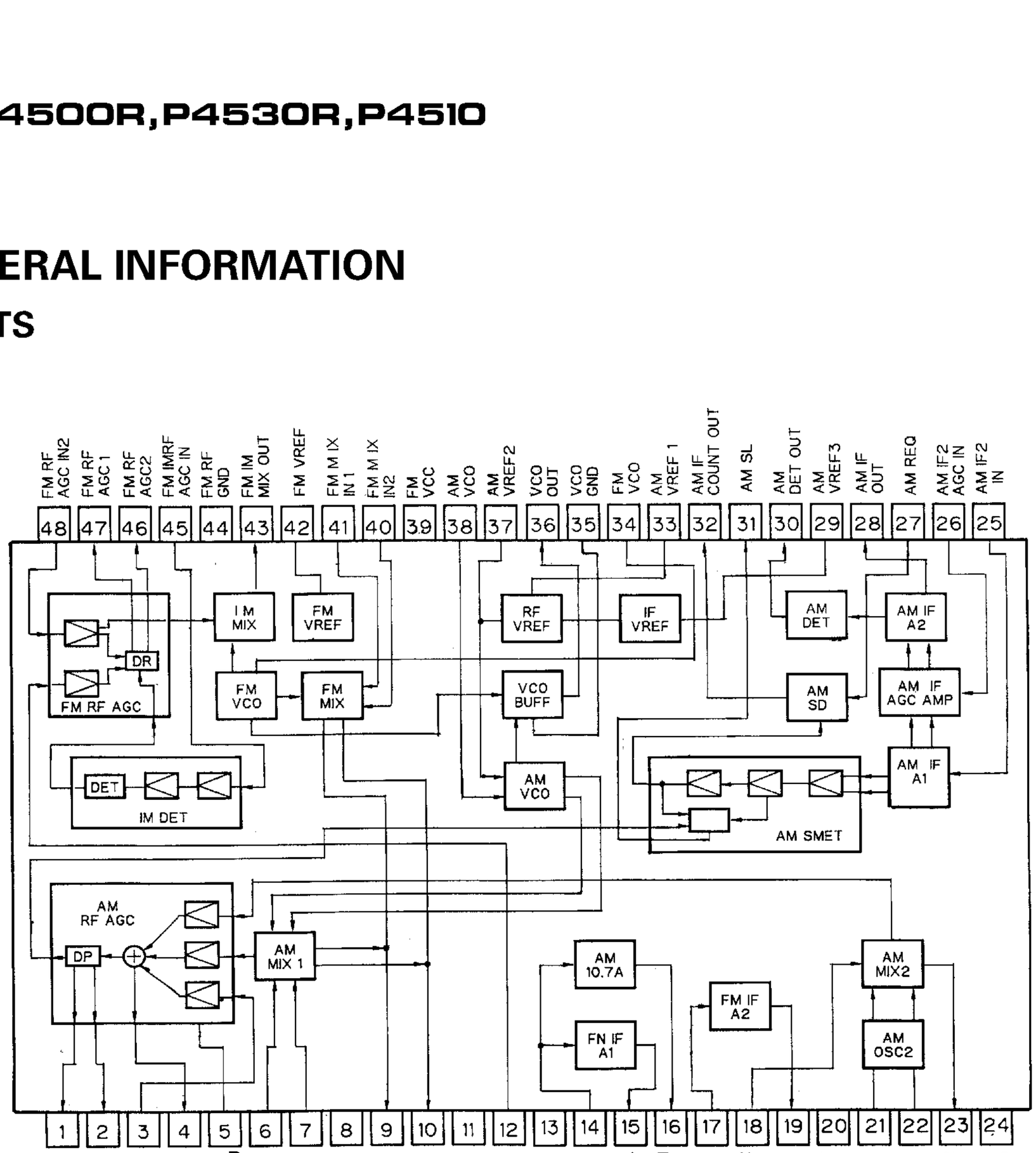

*SN761027DL

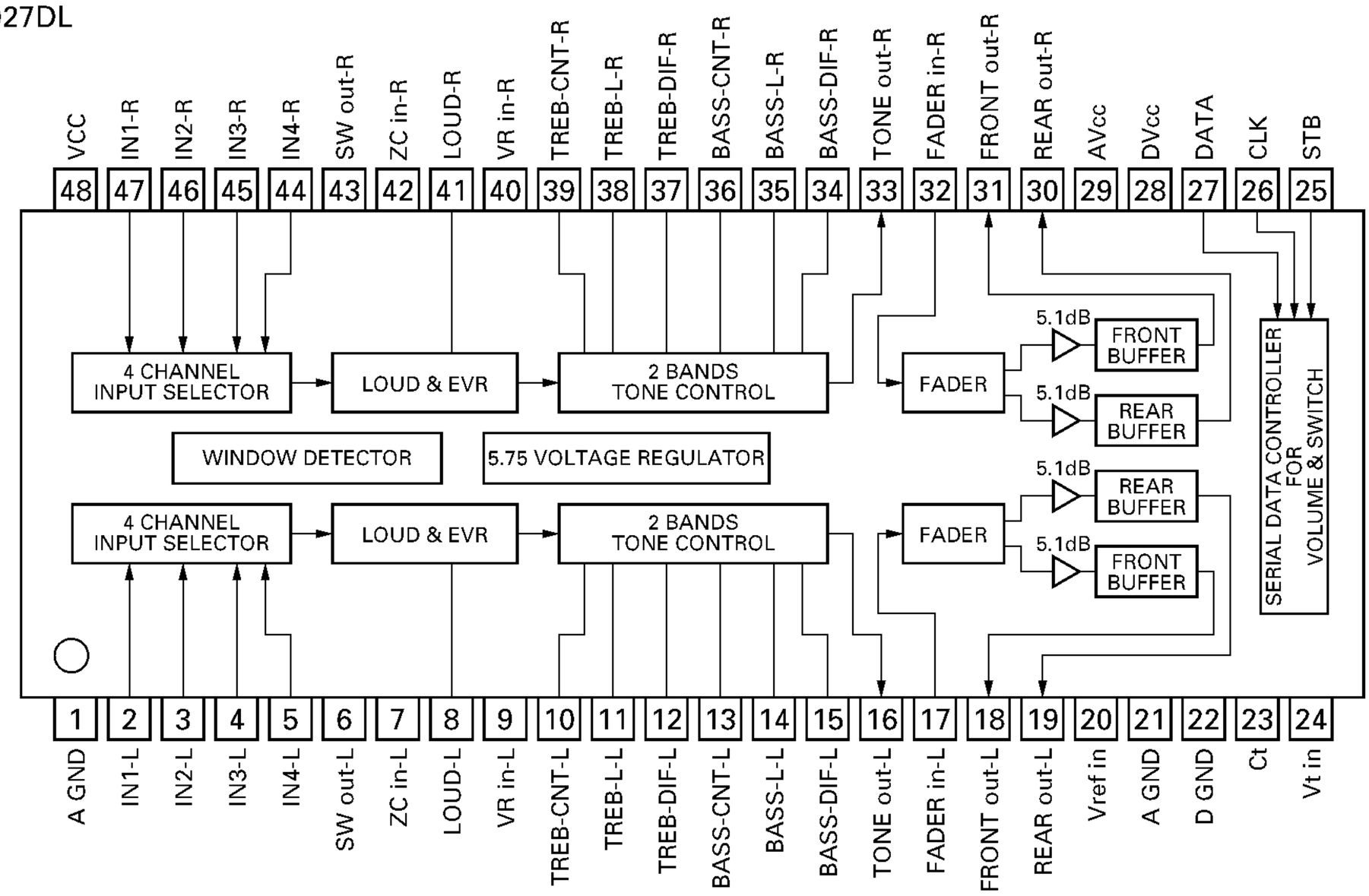

IC's marked by are MOS type.*
Be careful in handling them because they are very liable to be damaged by electrostatic induction.

ClibPDF - www.fastio.com

TDA7384A

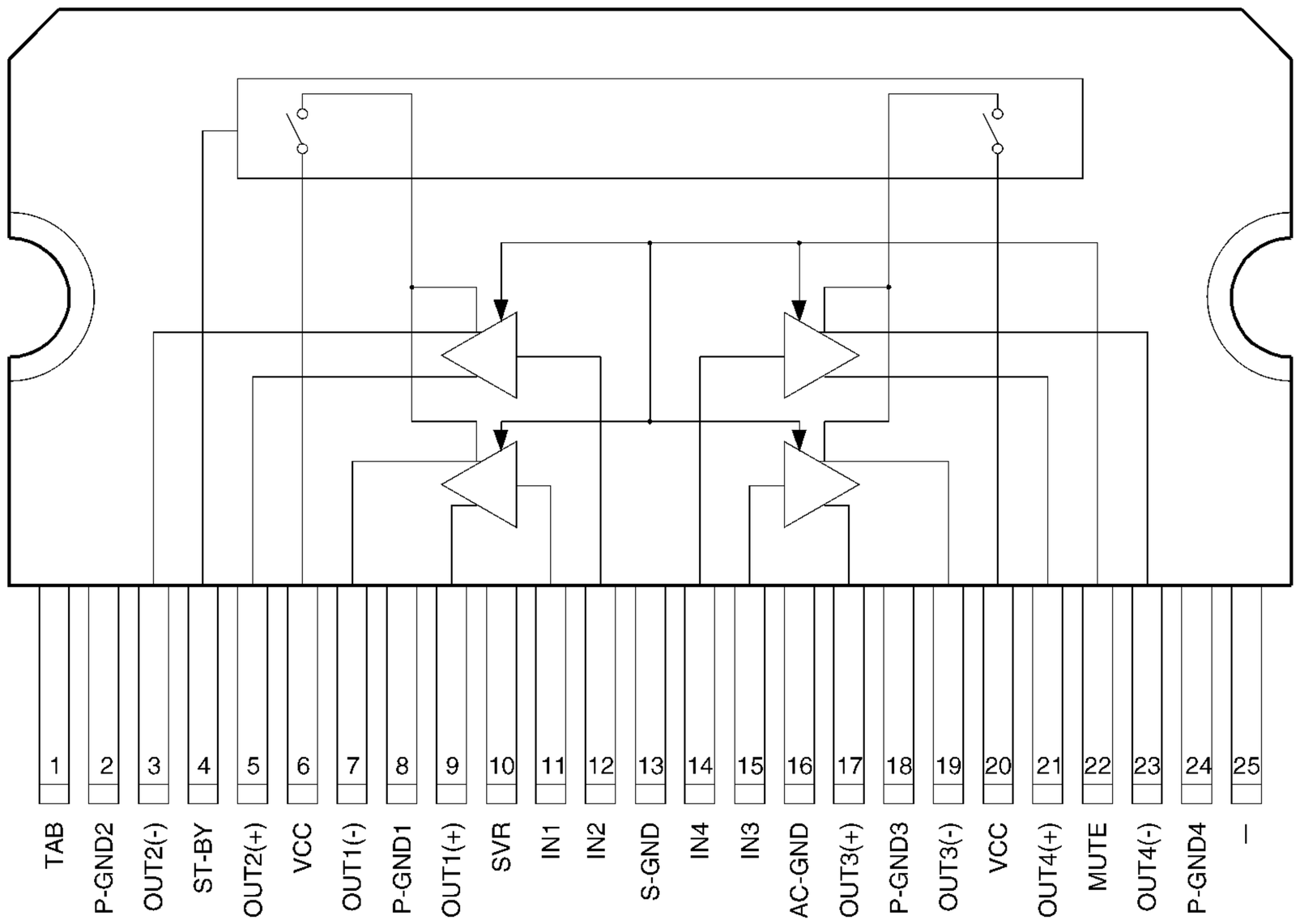

*PM2006A,*PM2007A

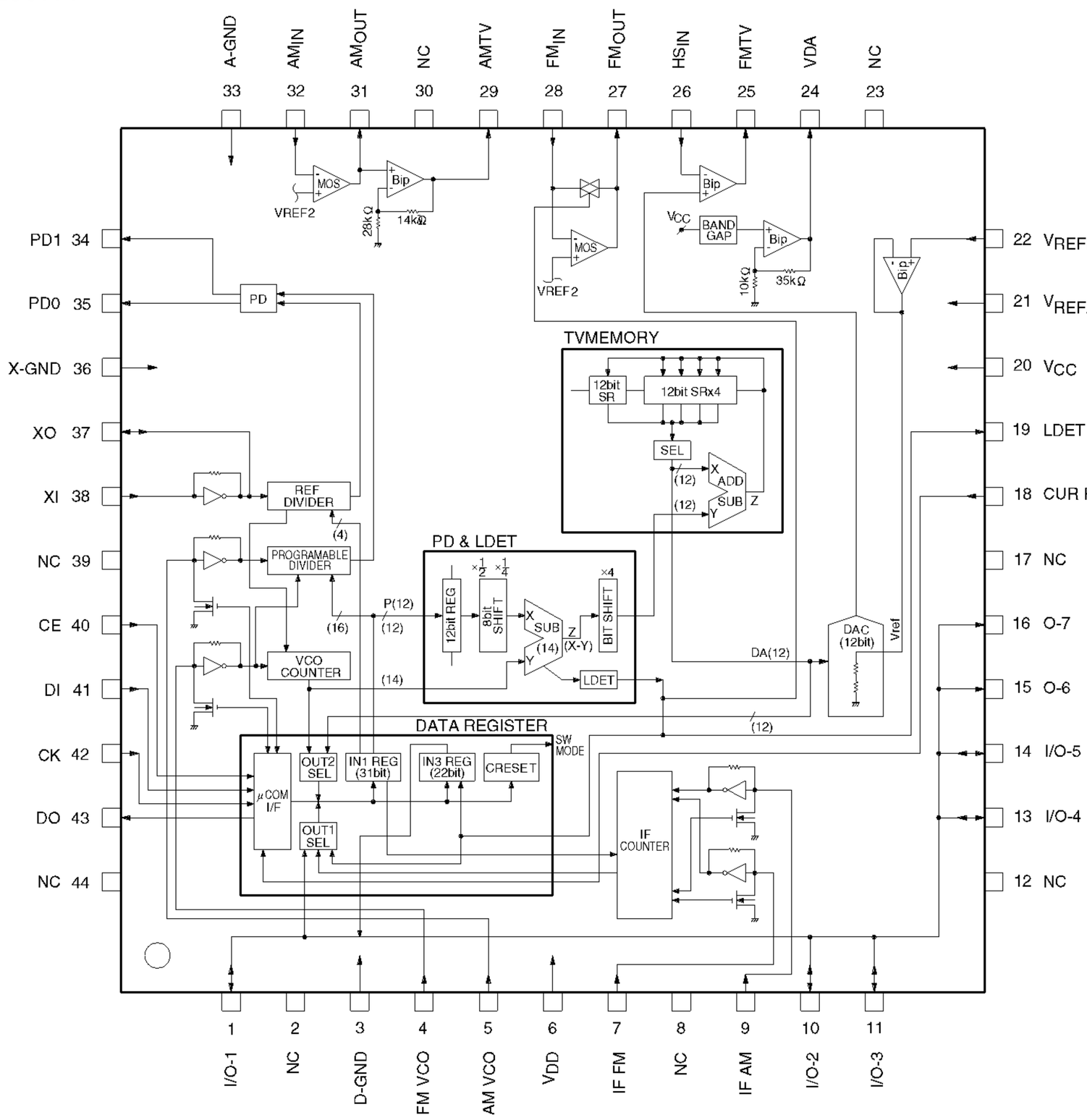

ClibPDF - www.fastio.com

● Pin Functions (PD4873A:EW,PD4874A:EE)

Pin No.	Pin Name	I/O	Format	Function and Operation
1	ASENB	O	C	ASENB output
2	NC			Not used
3	ADPW	O	C	Control output for analog input reference power
4	AVSS			A/D GND
5	FIEOUT	O	C	LPF switch
6	$\overline{ST}$	I		FM stereo input
7	AVREF1			(D/A converter standard voltage)
8	KYDT	I		Key data input
9	DPDT	O	C	Key data output
10	$\overline{SWVDD}$	O	C	Grille power supply control output
11	TUNPD1	I		PLL IC data input
12	TUNPD0	O	C	PLL IC data output
13	TUNPCK	O	C	PLL IC clock
14	TUNPCE	O	C	PLL IC chip enable
15	$\overline{CURRRQ}$	O	C	Tuner voltage FIX output
16	NC			Not used
17	TX2	O	C	IP BUS data output
18	NC			Not used
19	RECIVE	O	C	RDS decoder receive output
20	NC			Not used
21	EORR	O	C	CorrectRDS error output
22	VST	O	C	Strobe pulse output for electronic volume
23	VCK	O	C	Clock output for electronic volume
24	VDT	O	C	Data output for electronic volume
25	NC			Not used
26	DRSYS	O	C	Door system select output
27	DRSENS	I		Door open/close sense input
28	ILPW	O	C	Illumination power
29	FM	O	C	FM power control output
30	AM	O	C	AM power control output
31	NR	O	C	Cassette mechanism noise reduction output
32	CM	O	C	Cassette mechanism capstan motor control output
33	VSS			GND
34	SC2	O	C	Cassette mechanism sub motor control output
35	SC1	O	C	Cassette mechanism sub motor control output
36	MSIN	I		Cassette mechanism MS sense input
37	MUTCNT			GND
38	$\overline{MTL}$	I		Cassette mechanism tape select input
39	$\overline{DLED}$	O	N	Alarm LED output
40	$\overline{N}$/R	O	C	Normal reverse input
41	PLAY	O	C	MS gain select output
42	$\overline{LOADSW}$	I		Tape loading input
43	POS	I		Cassette mechanism position sense input
44	RES	I		Cassette mechanism reverse end sense input
45	PEE	O	C	Beep tone output
46	NES	I		Cassette mechanism forward end sense input
47	RDS57K	I		57kHzBP-OUT sense input
48	STBY	O	C	Stand-by output terminal
49	SK	I		SK signal input
50	$\overline{DRST}$	O	C	RDS decoder reset output
51	$\overline{TMUTE}$	O	C	Tuner mute output
52	NC			Not used
53	SD	I		SD input
54	$\overline{MUTE}$	O	C	System mute output
55	SYSPW	O	C	System power supply control output
56	TX1	O	C	IP-BUS output
57	RX	I		IP-BUS input

ClibPDF - www.fastio.com

Pin No.	Pin Name	I/O	Format	Function and Operation
58	RDSLK	I		RDSLK input
59	RDT	I		RDS data input
60	$\overline{\text{RESET}}$	I		Reset input
61	RX	I		IP BUS input
62	NC			Not used
63	$\overline{\text{DSENS}}$	I		Grille detach sense
64	NC			Not used
65	$\overline{\text{ASENS}}$	I		ACC power sense input
66	$\overline{\text{BSENS}}$	I		Back up power sense input
67	CKIN	I		Clock input
68	VDD			Power supply
69	X2			Crystal oscillator connection pin
70	X1			Crystal oscillator connection pin
71	IC			GND
72	NC			Not used
73	TESTIN	I		Test program mode input
74	AVDD			Positive power supply terminal for analog circuit
75	AVREF0			GND
76	SL	I		SD level input from tuner
77	CL	I		Synchronizing signal input of display data latch
78	NL	I		RDS noise level input
79	TL	I		Trigger level input
80	NC			Not used

*PD4873A,PD4874A

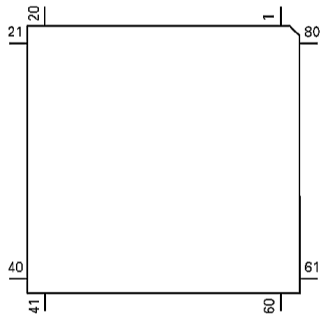

Format	Meaning
C	C MOS
N	N channel open drain

● Pin Functions (PD6195A)

Pin No.	Pin Name	I/O	Format	Function and Operation
1–5	SEG4-0	O		LCD segment output
6–9	COM3-0	O		LCD Common driver output
10	LCDB			LCD bias power supply
11–14	KS4-1	O	N	Key strobe output
15,16	KD0,1	I		Key data input
17	REM	I		Remote control reception
18	DPDT	I		UART input
19	RST	I		System reset
20	SO	O	C	UART output
21	KYDT			(VSS)
22	X0			Crystal oscillator connection pin
23	X1			Crystal oscillator connection pin
24	VSS			GND
25,26	KD2,3	I		Key data input
27,28	KS5,4	O	N	Key strobe output
29–55	SEG39-13	O		LCD segment output
56	VDD			Power
57–64	SEG12-5	O		LCD segment output

*PD6195A

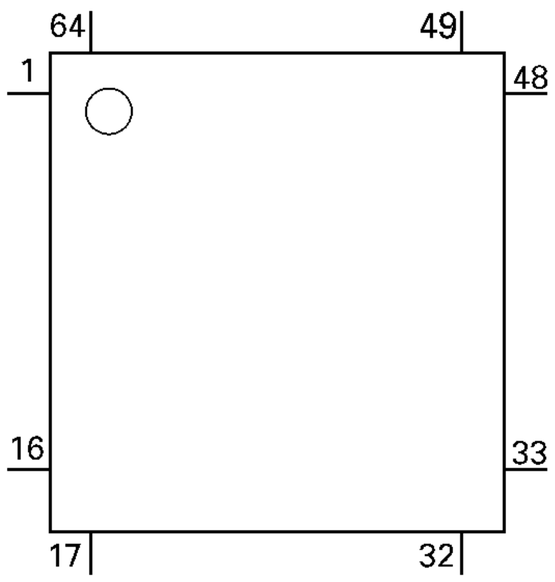

Format	Meaning
C	C MOS
N	N channel open drain

HA12197F

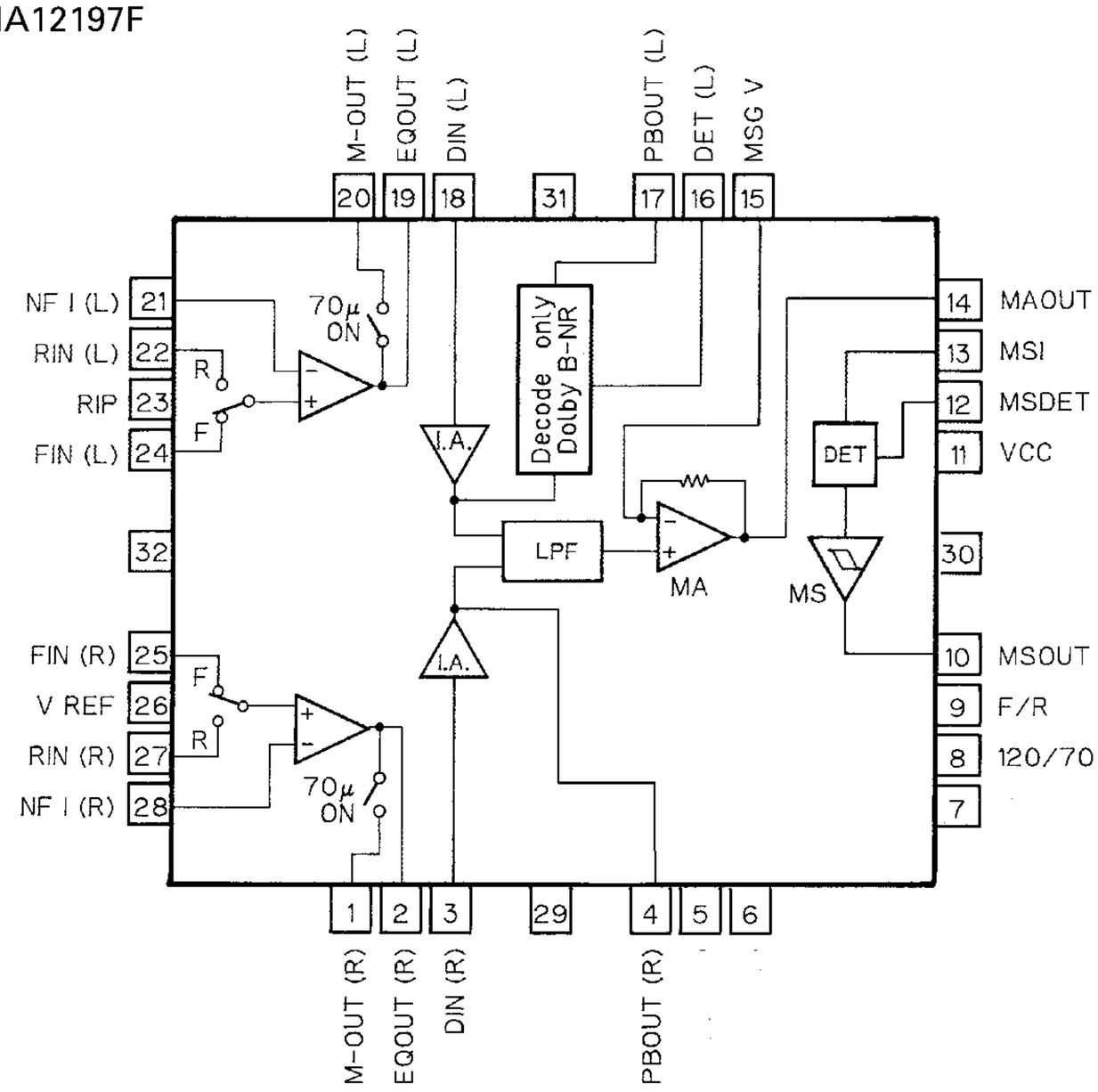

ClibPDF - www.fastio.com

7.1.2 DISPLAY

● **CAW1383 (KEH-P4500R/X1M/EW)**

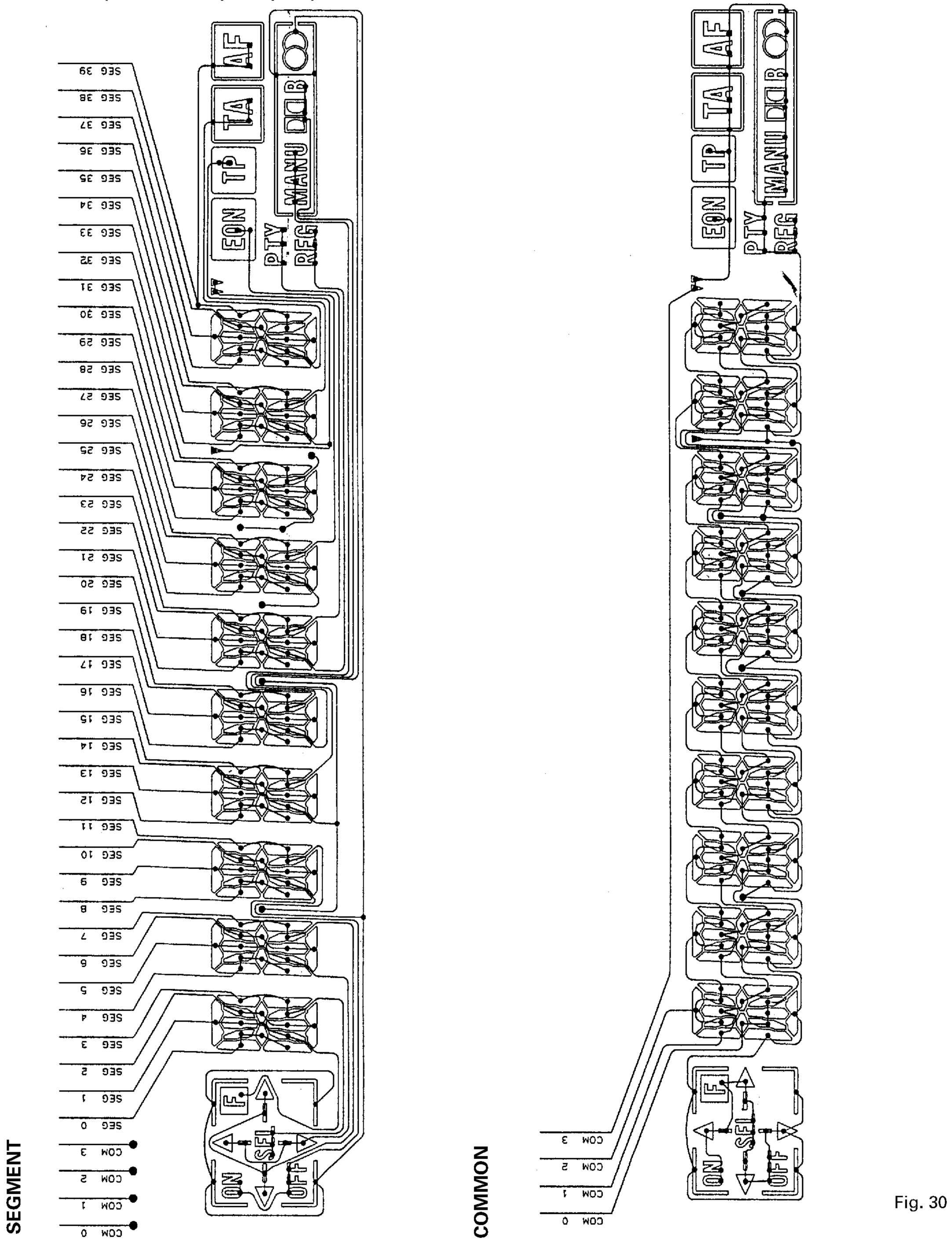

Fig. 30

● CAW1391 (KEH-P4530R/X1M/EW)

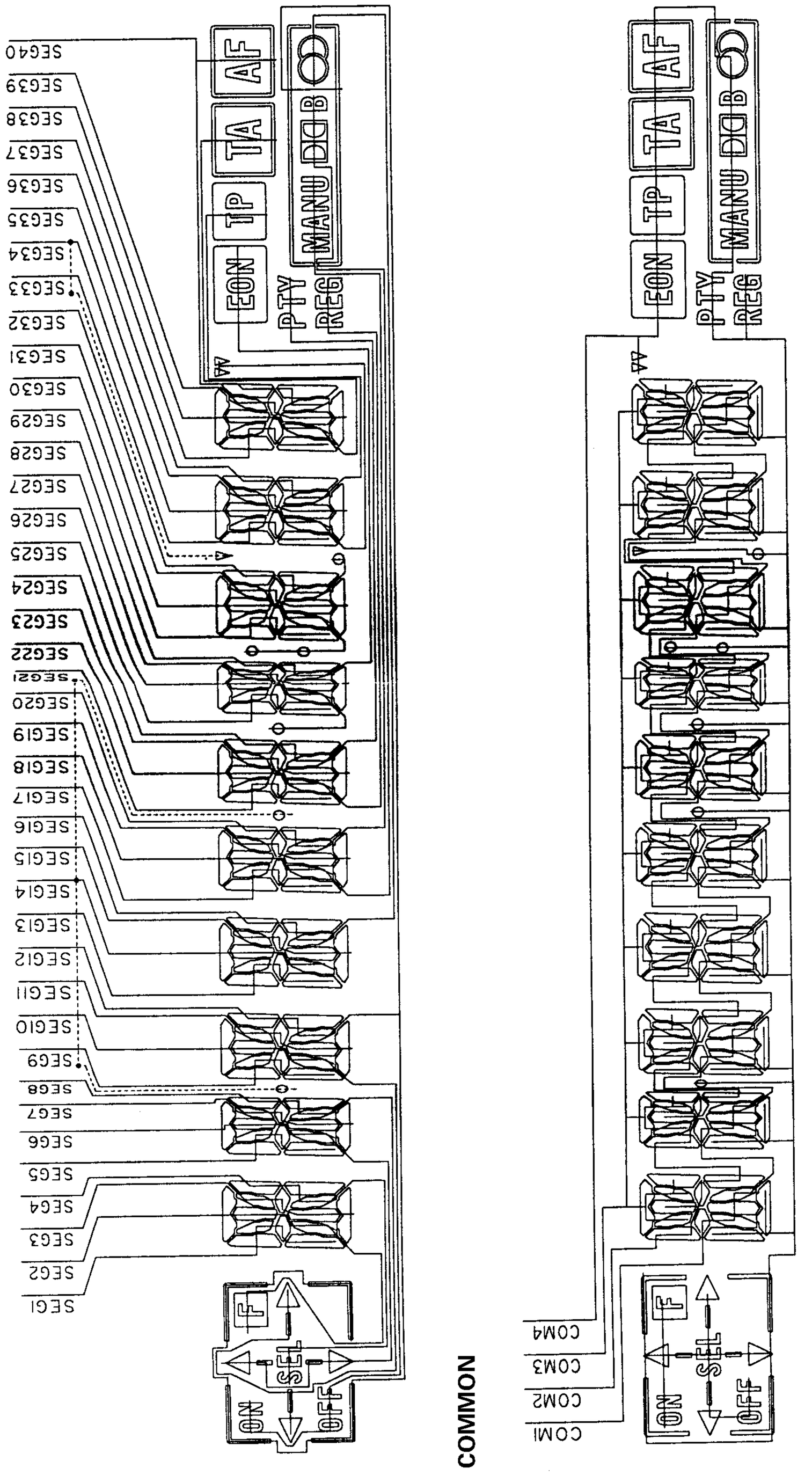

Fig. 31

ClibPDF - www.fastio.com

● CAW1410 (KEH-P4510/X1M/EE)

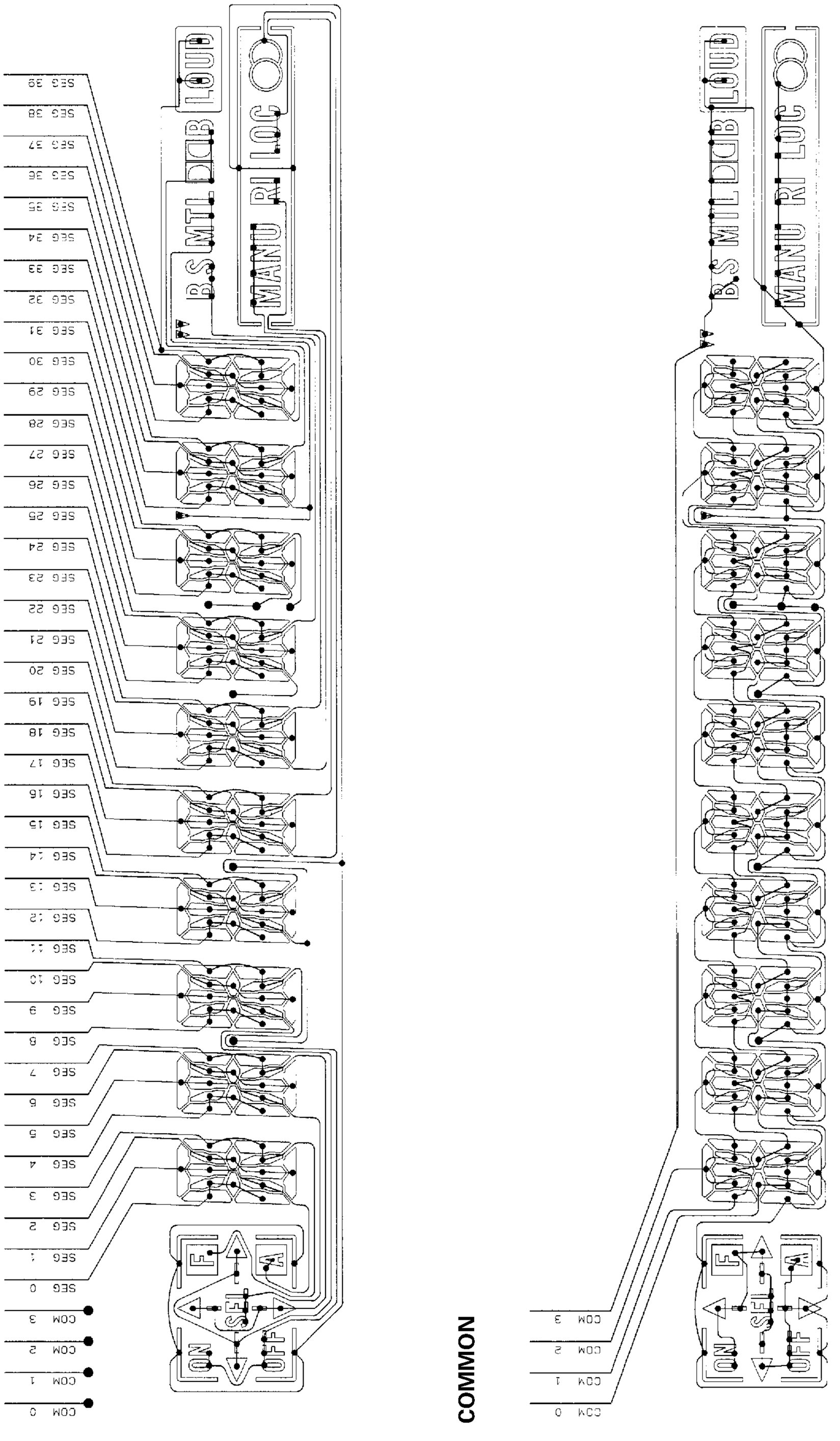

Fig. 32

ClibPDF - www.fastio.com

7.2 DIAGNOSIS

7.2.1 DISASSEMBLY

1. Detach Grille Assy

1. A×3

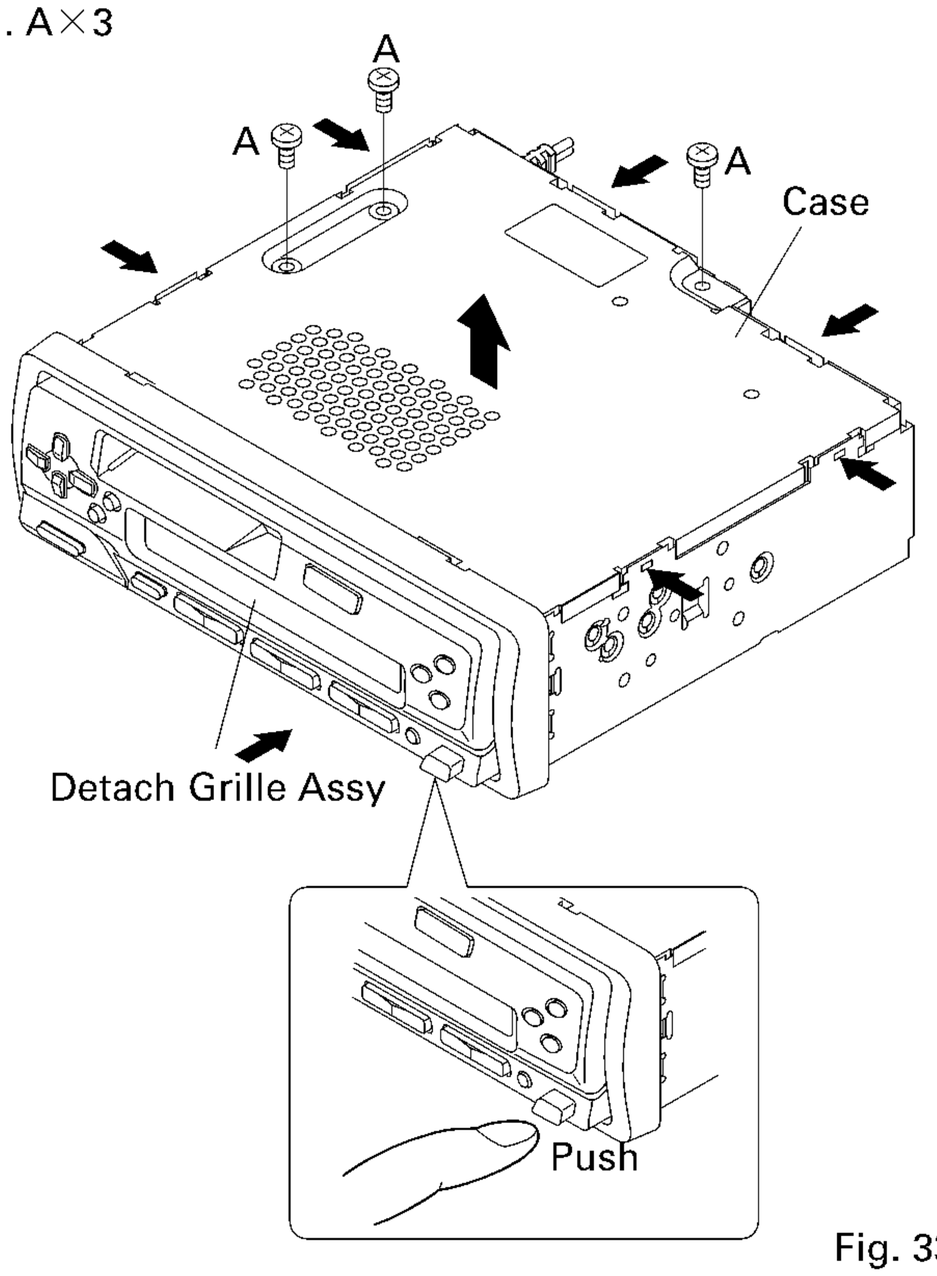

Fig. 33

2. Panel Unit

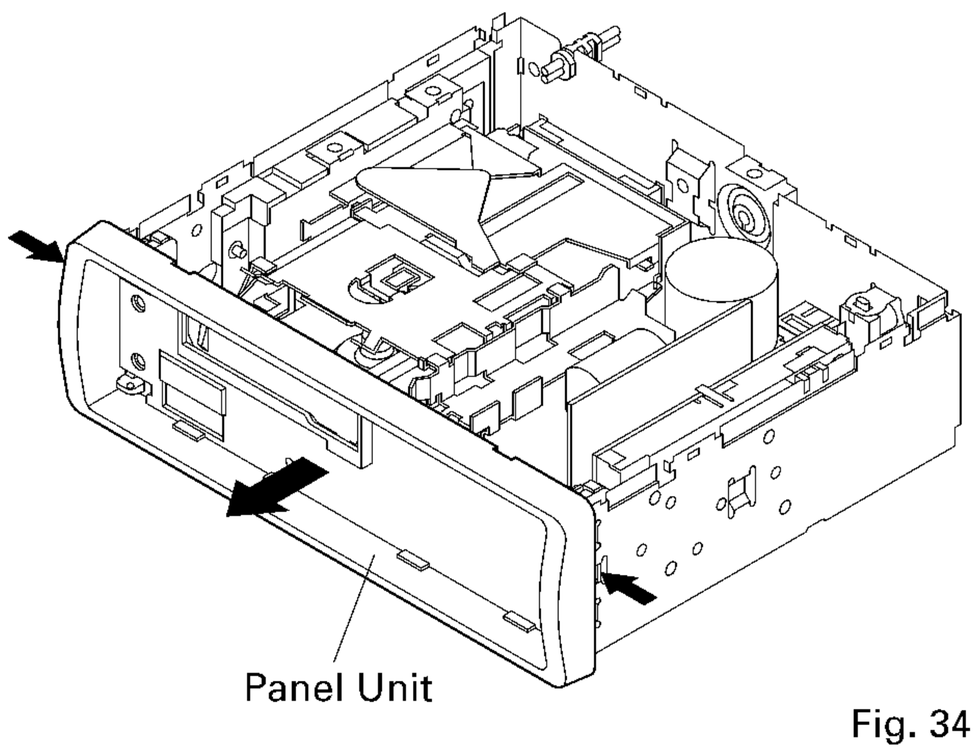

Fig. 34

3. Cassette Mechanism Module

1. A×4

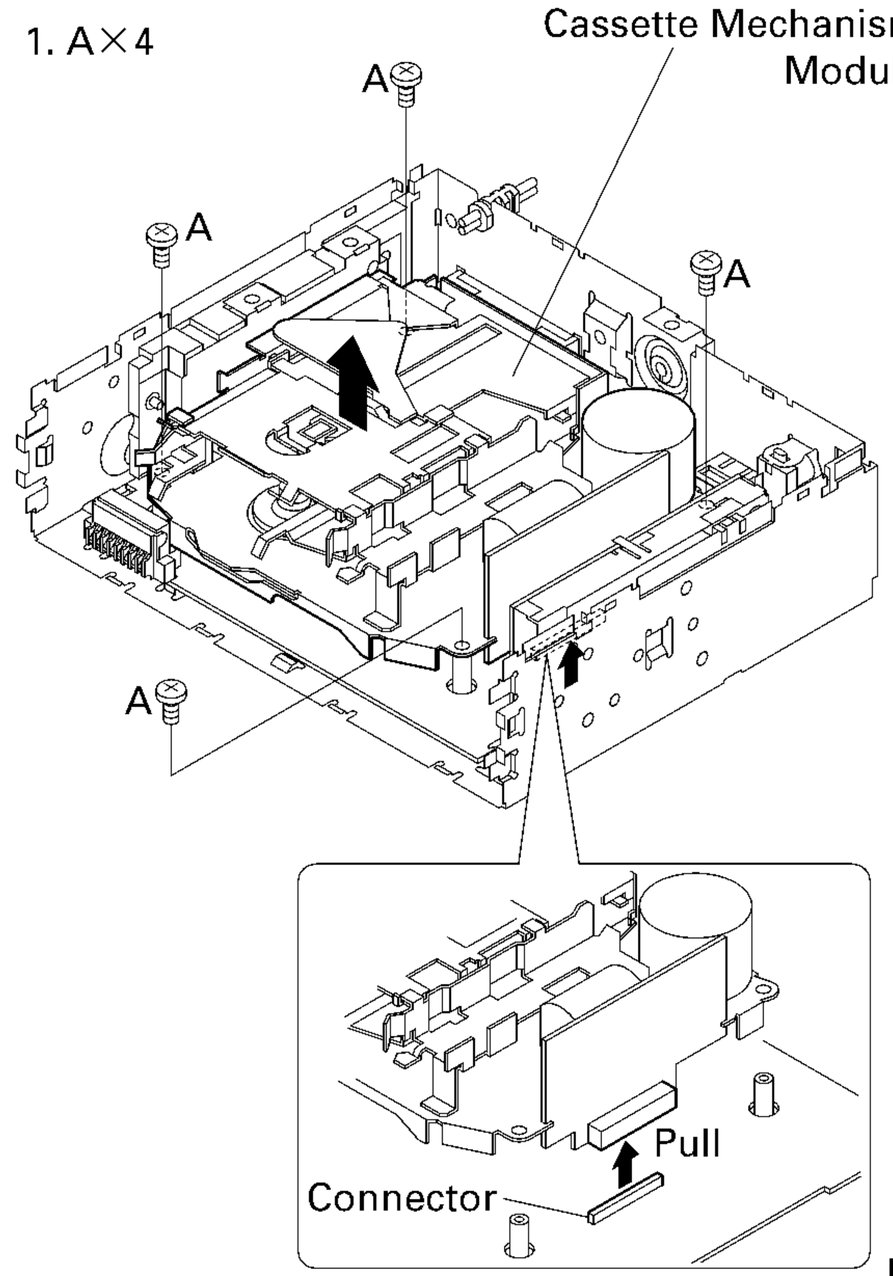

Fig. 35

4. Tuner Amp Unit

1. A×5
2. B×2

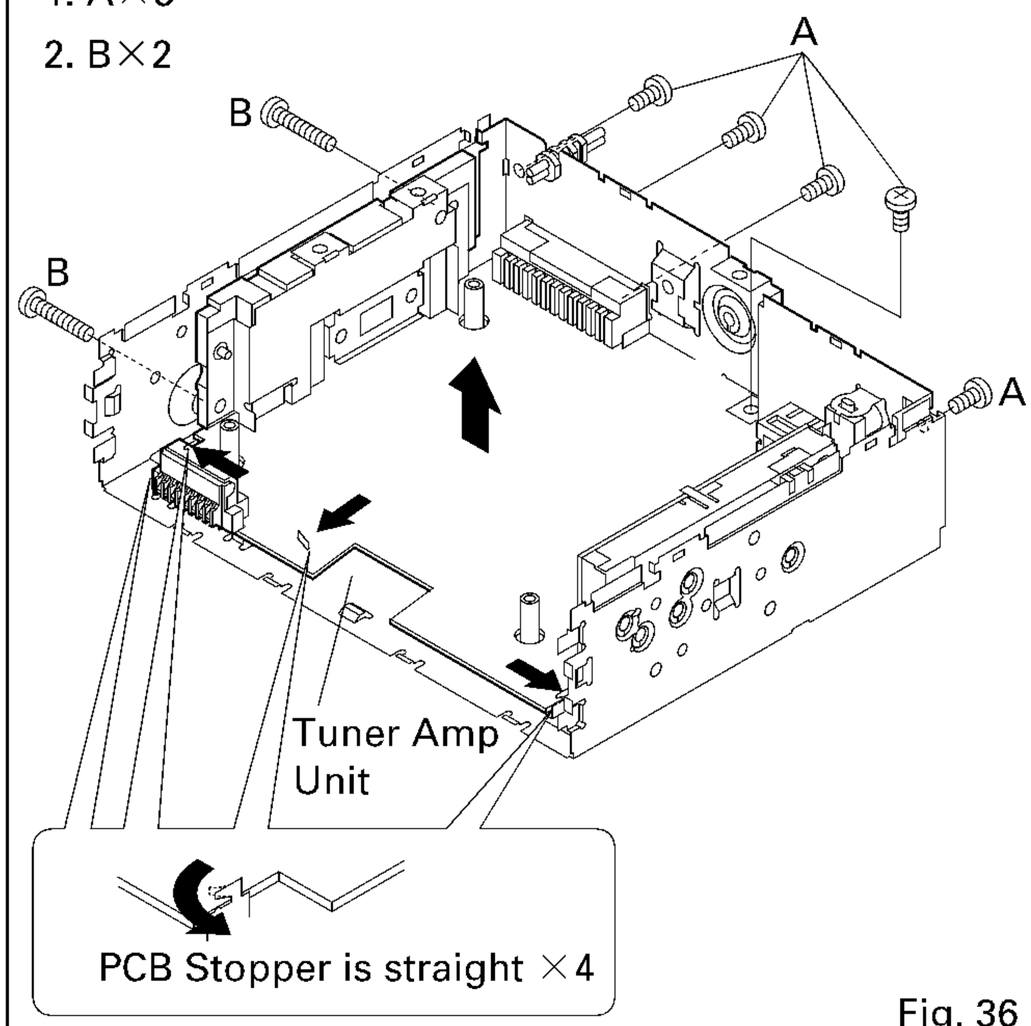

Fig. 36

ClibPDF - www.fastio.com

ClibPDF - www.fastio.com

KEH-P4500R,P4530R,P4510

7.3 BLOCK DIAGRAM

● **KEH-P4500R/X1M/EW**

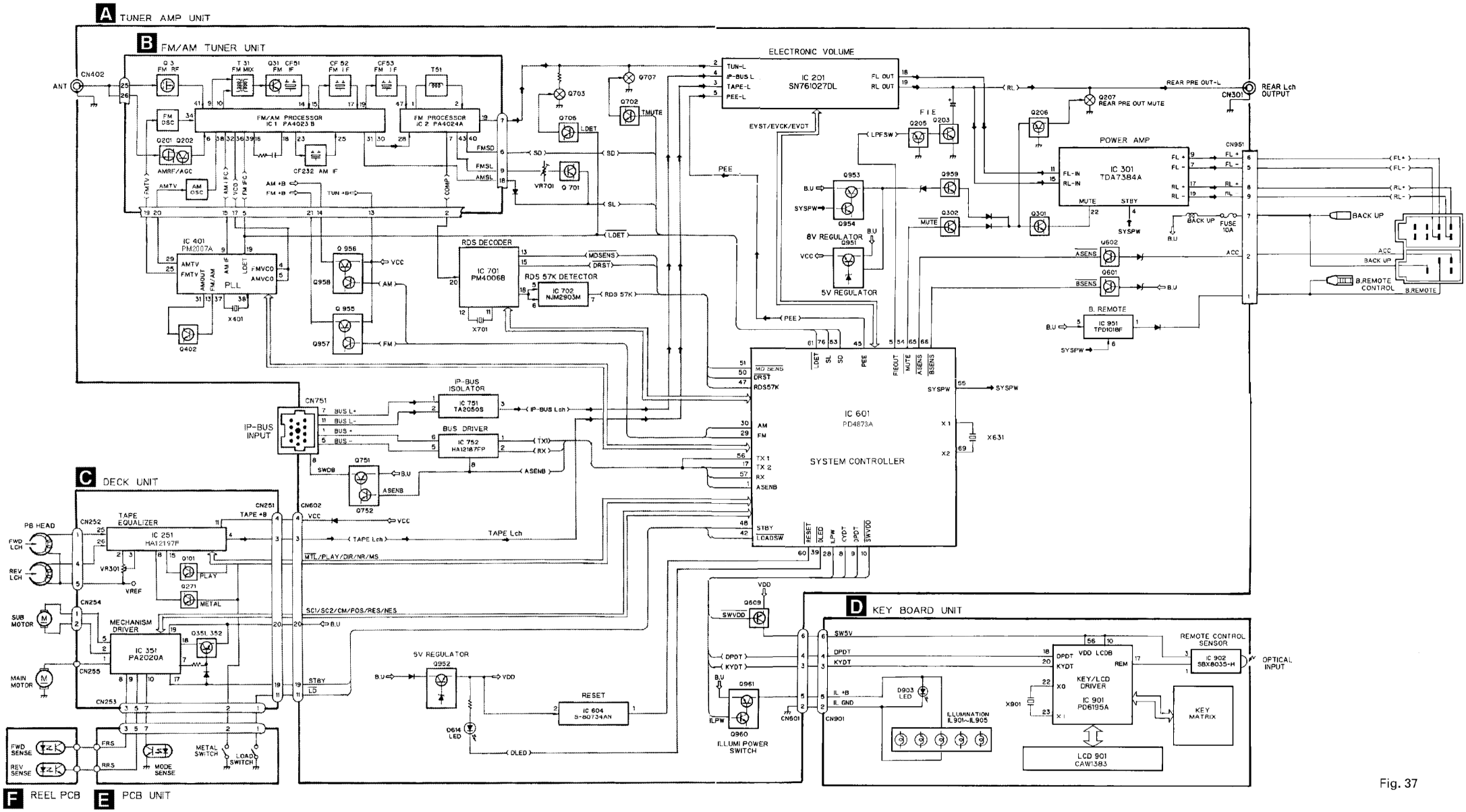

Fig. 37

8. OPERATIONS AND SPECIFICATIONS

8.1 OPERATIONS (KEH-P4500R/EW)

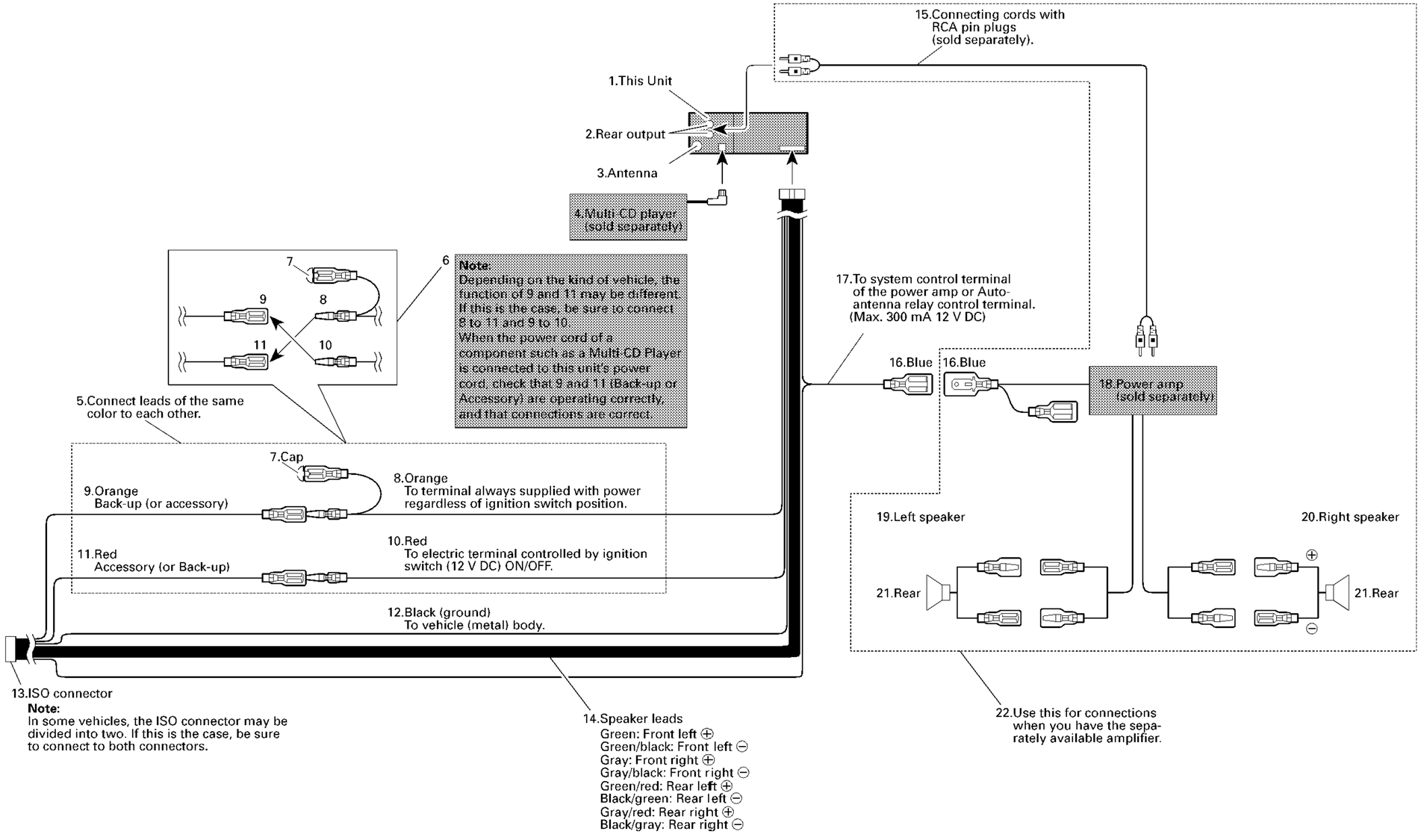

Fig. 38

Key Finder

■ Head Unit

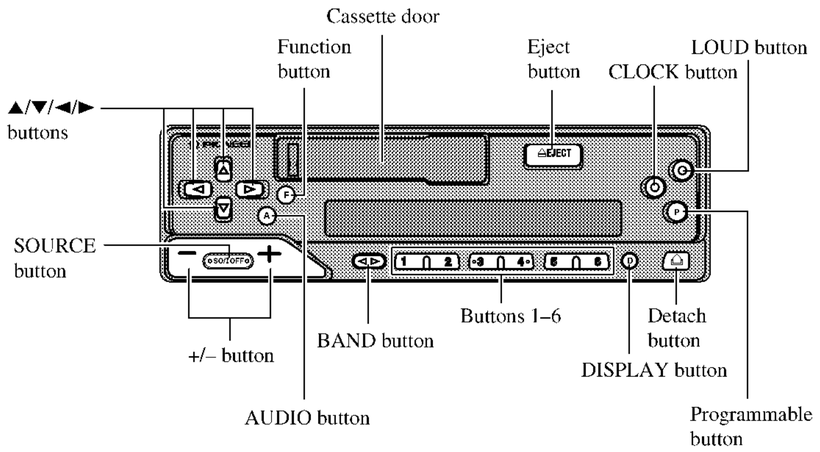

Fig. 39

■ Remote Controller (CD-R66)

The remote controller (CD-R66) is an option.

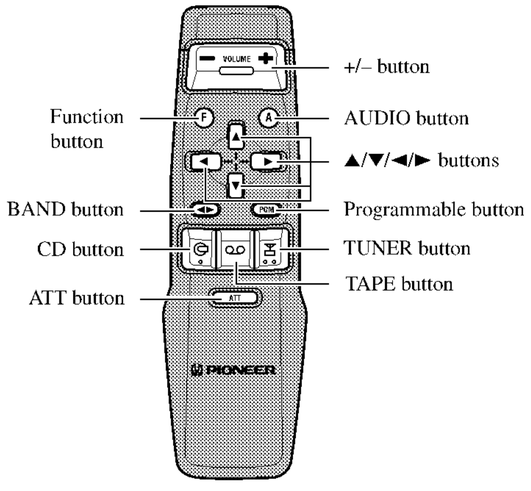

Fig. 40

Basic Operation

Switching Power ON/OFF

- **Select the desired source (such as the tuner).**

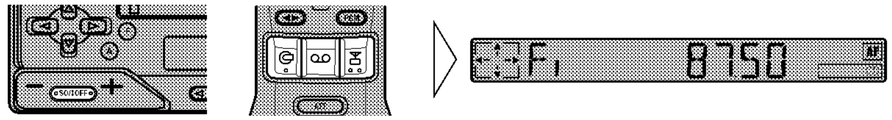

■ Head Unit

Each press of the SOURCE button selects the desired source in the following order:
Tuner → Tape → Multi-CD player → AUX

To switch the sources OFF, hold down the SOURCE button for 1 second or more.

■ Remote Controller

Each press of the button selects the desired source in the following order:
TUNER button : Tuner → OFF
TAPE button : Tape → OFF
CD button : Multi-CD player → OFF

Note:

- In the following cases, the sound source will not change:
  * No Multi-CD player is connected to this unit.
  * No cassette tape is set in this unit.
  * No magazine is set in the Multi-CD player.
  * AUX (external input) is set to OFF.

Using the Cassette Player

Basic Operation of Cassette Player

1. **Insert the cassette tape.**

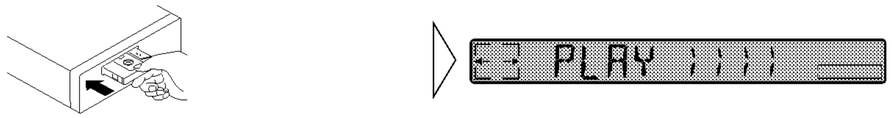

2. **Switch tape playback from side A to side B, or vice versa.**

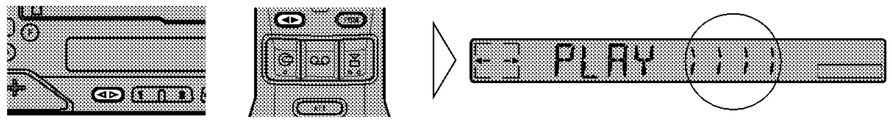

3. **Raise or lower the volume.**

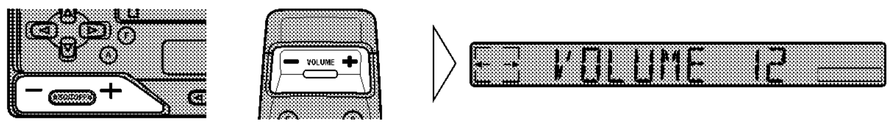

4. **Remove the cassette tape.**

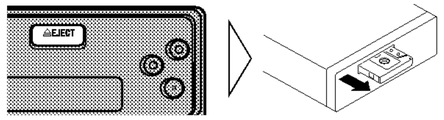

Note:
- The Tape function can be turned ON/OFF with the cassette tape remaining in this product.

Tuner Operation

Entering the Function Menu

In this menu you can select tuner functions.

Note:
- REG, TA, PTY, and AF are RDS functions. Refer to "Using RDS Function" for details and instructions on how to use these functions.

- **Select the desired mode in Function Menu.**

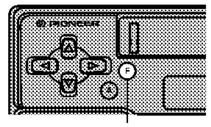

Each press changes the Mode ...

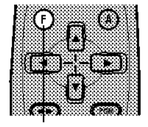

Each press changes the Mode ...

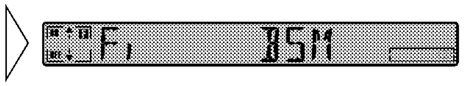

Each press of the Function button selects the mode in the following order:
BSM → REG → LOCAL → TA → PTY SELECT → AF

Note:
- You can cancel the Function Menu by pressing the BAND button.
- After selecting the Function Menu, if you do not perform an operation within about 30 seconds, the Function Menu is automatically canceled.

ClaPDF - www.fastio.com

Using the Cassette Player

Fast Forward/Rewind and Music Search

■ Fast Forward and Forward-Music Search

While "FF" is displayed, the system fast-forwards the cassette tape to the end of the current side.

While "F-MS" is displayed, the system winds the cassette tape forward to the beginning of the next song, then play begins from that point.

- **Select the desired mode in the following order:**

FF → F-MS → Normal playback

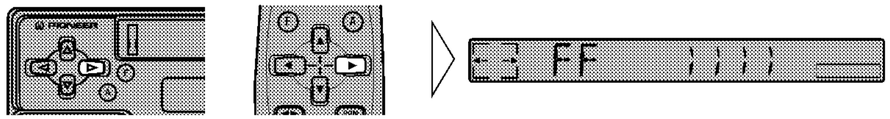

Note:
- Fast Forward (FF) and Forward-Music Search (F-MS) can be canceled by pressing the BAND button during FF or F-MS operation.

■ Rewind and Rewind-Music Search

While "REW" is displayed, the system rewinds the cassette tape to the beginning of the current side.

While "R-MS" is displayed, the system rewinds the cassette tape to the beginning of the current song, then play begins from that point.

- **Select the desired mode in the following order:**

REW → R-MS → Normal playback

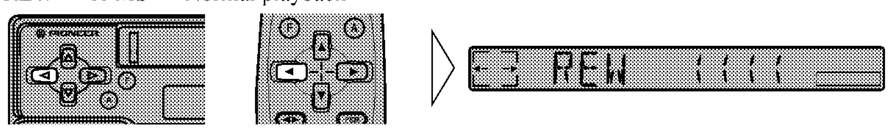

Note:
- Rewind (REW) and Rewind-Music Search (R-MS) can be canceled by pressing the BAND button during the REW or R-MS operation.

Using Multi-CD Players

This product can control one or more multi-CD players.

Basic Operation of Multi-CD Players

1. Select the multi-CD player source.

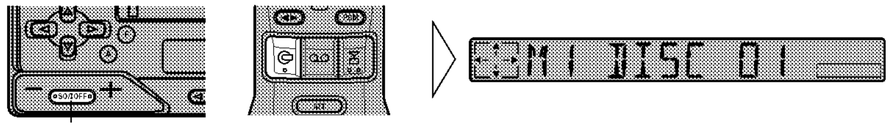

Each press changes the Source ...

Note:
- The multi-CD player may perform a preparatory operation, such as verifying the presence of a disc or reading disc information, when the power is turned ON or a new disc is selected for playback. "READY" is displayed.
- If the multi-CD player cannot operate properly, an error message such as "ERROR 14" is displayed. Refer to the multi-CD player owner's manual.

2. Select the desired disc.

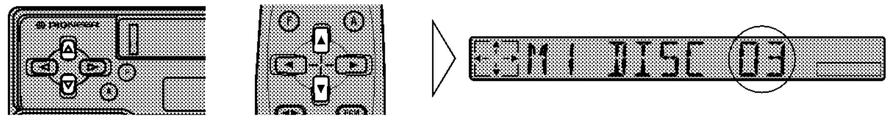

3. Reverse or advance track by track.

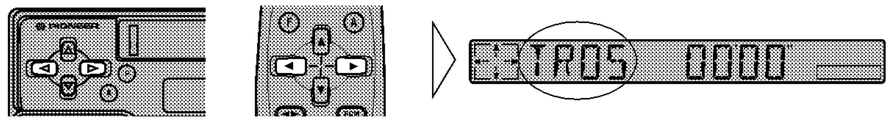

4. Raise or lower the volume.

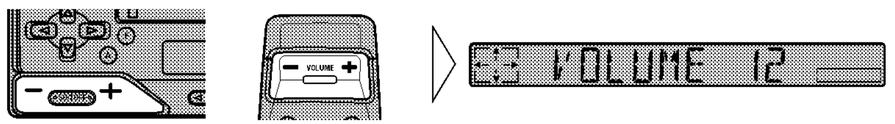

5. Turn the source OFF. (See page 8.)

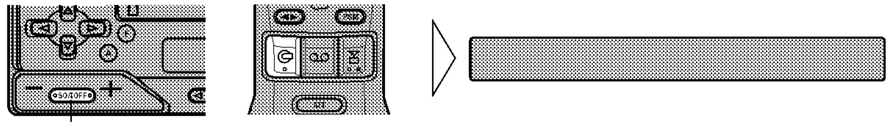

Hold for 1 second

Switching the Multi-CD Player

It is possible to connect up to three multi-CD players by means of a multiple installation adapter. When two or more multi-CD players are installed, their priorities must be specified. Follow the multi-CD player instructions carefully, and set the address switches properly.

- **Select the multi-CD player you want to use.**

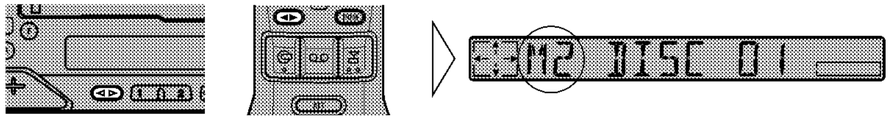

M1 → M2 → M3

Disc Number Search

■ Disc Number Search (for 6-Disc, 12-Disc types)

You can select discs directly with the 1 to 6 buttons. Just press the number corresponding to the disc you want to listen to.

Note:

- When a 12-Disc Multi-CD Player is connected and you want to select disc 7 to 12, press the 1 to 6 buttons for 2 seconds or longer.

- **Select the desired disc. (eg. Press button 3.)**

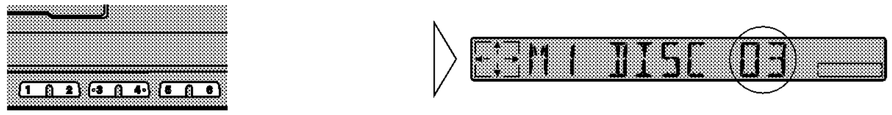

■ Disc Number Rough Search (for 50-Disc type only)

This handy function lets you select discs loaded in a 50-Disc Multi-CD Player using the 1 to 5 buttons. The 50 discs are divided into five blocks, with each of the 1 to 5 buttons assigned to a block.
For example, if you press button 1, discs 10 through 19 are searched in order, and then the disc with the lowest disc number is selected.

Note:

- Pressing button 5 lets you select the 50th disc only.
- Button 6 does not operate.
- Rough search of discs 1 to 9 is not possible. Use the ▲/▼ buttons to select a desired disc.

Specifications

General

Power source ..... 14.4 V DC (10.8 – 15.1 V allowable)
Grounding system ..... Negative type
Max. current consumption ..... 8.5 A
Dimensions
(mounting size) ..... 178 (W) × 50 (H) × 150 (D) mm
(front face) ..... 188 (W) × 58 (H) × 19 (D) mm
Weight ..... 1.2 kg

Amplifier

Maximum power output ..... 35 W × 4
Continuous power output ..... 22 W × 4
(DIN45324, +B = 14.4 V)
Load impedance ..... 4 Ω (4 – 8 Ω allowable)
Preout output level/output impedance ..... 500 mV/1 kΩ
Tone controls
(Bass) ..... ±12 dB (100 Hz)
(Treble) ..... ±12 dB (10 kHz)
Loudness contour ..... +10 dB (100 Hz), +7 dB (10 kHz)
(volume: –30 dB)

Cassette player

Tape ..... Compact cassette tape (C-30 – C-90)
Tape speed ..... 4.7 cm/sec.(+0.14cm/sec.,-0.05cm/sec.)
Fast forward/rewinding time .... Approx. 100 sec. for C-60
Wow & flutter ..... 0.09% (WRMS)
Frequency response ..... 30 – 16,000 Hz (±3 dB)
Stereo separation ..... 45 dB
Signal-to-noise ratio ..... 61 dB (IEC-A network)

FM tuner

Frequency range
(KEX-P400R, P4530R) .....87.5 – 108 MHz
(KEX-P4510) .....65 – 74 MHz
..... 87.5 – 108 MHz
Usable sensitivity
..... 11 dBf (1.0 µV/75 Ω, mono, S/N: 30 dB)
50 dB quieting sensitivity .... 16 dBf (1.7 µV/75 Ω, mono)
Signal-to-noise ratio ..... 70 dB (IEC-A network)
Distortion ..... 0.3% (at 65 dBf, 1 kHz, stereo)
Frequency response ..... 30 – 15,000 Hz (±3 dB)
Stereo separation ..... 40 dB (at 65 dBf, 1 kHz)

MW tuner

Frequency range ..... 531 – 1,602 kHz
Usable sensitivity ..... 18 µV (25 dB) (S/N: 20 dB)
Selectivity ..... 50 dB (±9 kHz)

LW tuner

Frequency range ..... 153 – 281 kHz
Usable sensitivity ..... 30 µV (30 dB) (S/N: 20 dB)
Selectivity ..... 50 dB (±9 kHz)

Note:

- Specifications and the design are subject to possible modification without notice due to improvements.