Pioneer

Service Manual

ORDER NO.
ARP3036

PROJECTION COLOUR TELEVISION

SD-T50W1

● **This service manual should be used together with the following manual(s):**

Model No.	Order No.	Remarks
SD-T50W1	ARP2932	

THIS MANUAL IS APPLICABLE TO THE FOLLOWING MODEL(S) AND TYPE(S).

Type	Model	Power Requirement	Remarks
	SD-T50W1		
WYZI7/2	◯	AC220–240V	

PIONEER CORPORATION 4-1, Meguro 1-Chome, Meguro-ku, Tokyo 153-8654, Japan
PIONEER ELECTRONICS SERVICE, INC. P.O. Box 1760, Long Beach, CA 90801-1760, U.S.A.
PIONEER ELECTRONIC (EUROPE) N.V. Haven 1087, Keetberglaan 1, 9120 Melsele, Belgium
PIONEER ELECTRONICS ASIACENTRE PTE. LTD. 253 Alexandra Road, #04-01, Singapore 159936
©PIONEER CORPORATION 1999

O–ZZR JULY 1999 Printed in Japan

2. SCHEMATIC DIAGRAM

Note: When ordering service parts, be sure to refer to "EXPLODED VIEWS AND PARTS LIST" or "PCB PARTS LIST".

2.1 OVERALL WIRING DIAGRAM

Only the differences in the overall wiring diagram between WYZI7/2 type and SL type are shown.

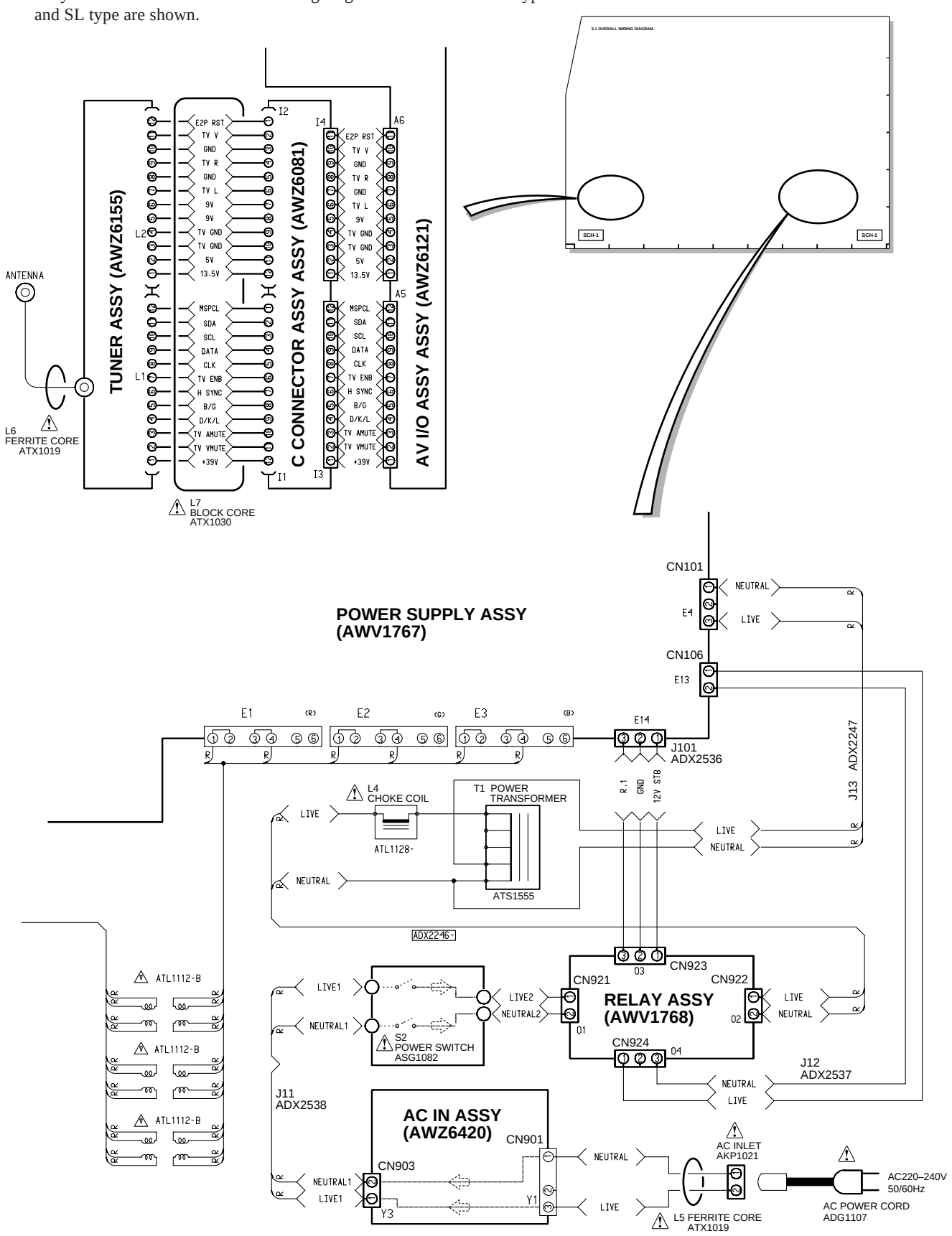

2.2 POWER SUPPLY and RELAY ASSEMBLIES

Only the differences in the power supply assy between WYZI7/2 type and SL type are shown.

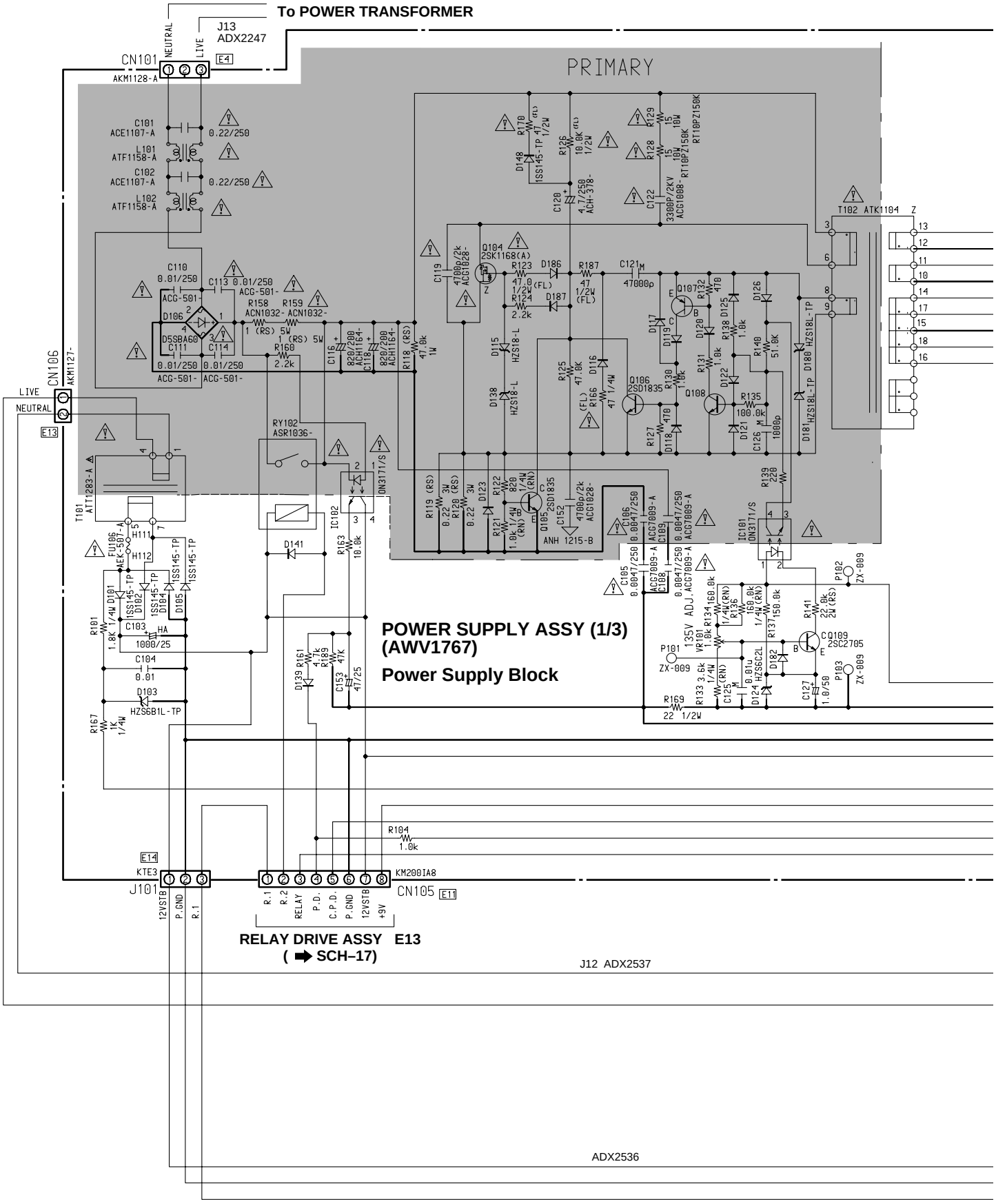

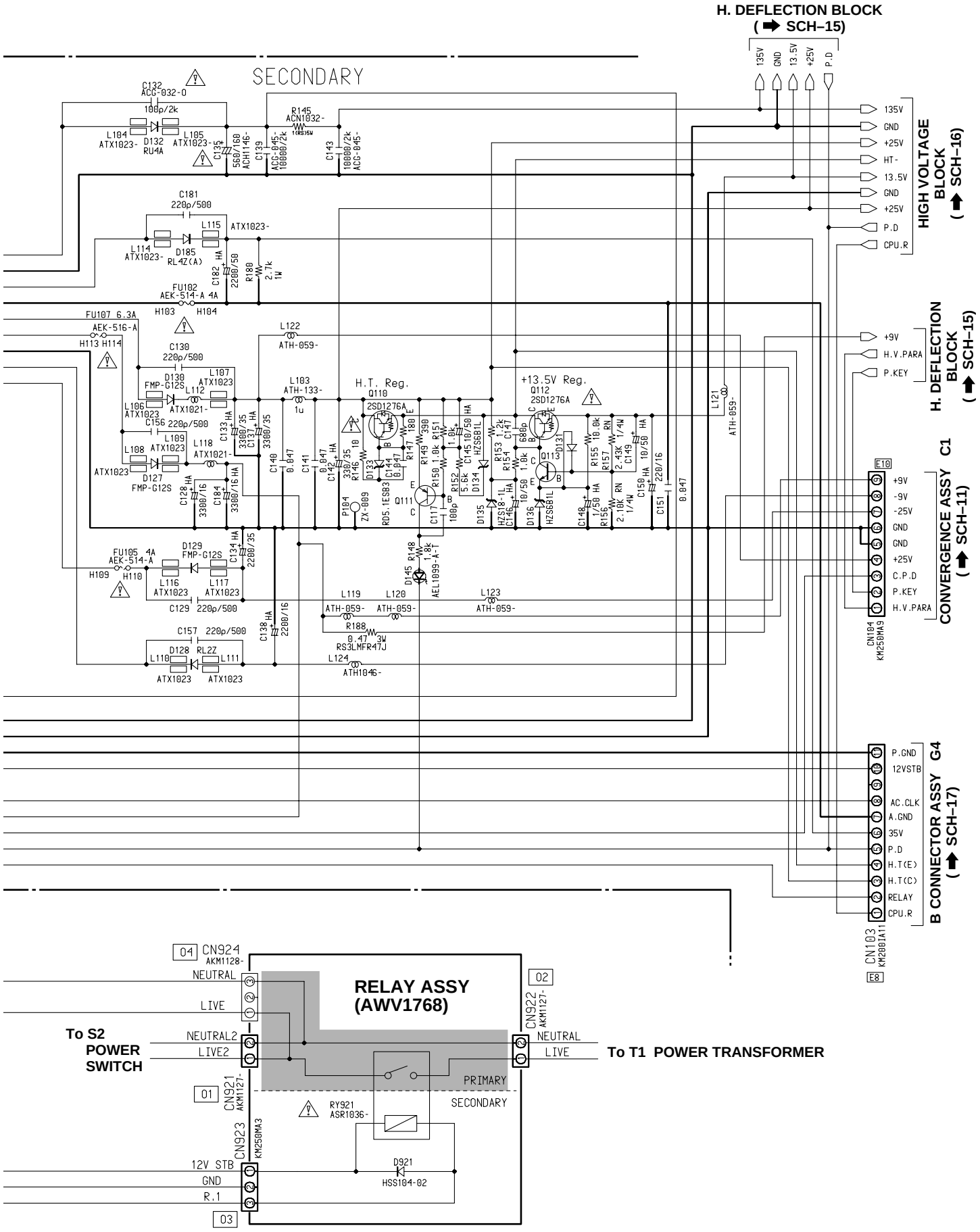
H. DEFLECTION BLOCK
(➡ SCH–15)
135V
GND
13.5V
+25V
P.D
SECONDARY
HIGH VOLTAGE BLOCK
(⬆ SCH–16)
135V
GND
+25V
HT-
13.5V
GND
+25V
P.D
CPU.R
H. DEFLECTION BLOCK
(⬆ SCH–15)
+9V
H.V.PARA
P.KEY
CONVERGENCE ASSY C1
(⬆ SCH–11)
CN104
KM250MA9
+9V
-9V
-25V
GND
GND
+25V
C.P.D
P.KEY
H.V.PARA
B CONNECTOR ASSY G4
(⬆ SCH–17)
CN103
KM2001A11
P.GND
12VSTB
AC.CLK
A.GND
35V
P.D
H.T(E)
H.T(C)
RELAY
CPU.R
H.T. Reg.
+13.5V Reg.
RELAY ASSY
(AWV1768)
CN924
AKM1128-
NEUTRAL
LIVE
To S2
POWER
SWITCH
NEUTRAL2
LIVE2
CN921
AKM1127-
CN923
KM250MA3
12V STB
GND
R.1
CN922
AKM1127-
NEUTRAL
LIVE
To T1 POWER TRANSFORMER
PRIMARY
SECONDARY
RY921
ASR1036-
D921
HSS104-02

2.3 TUNER ASSY

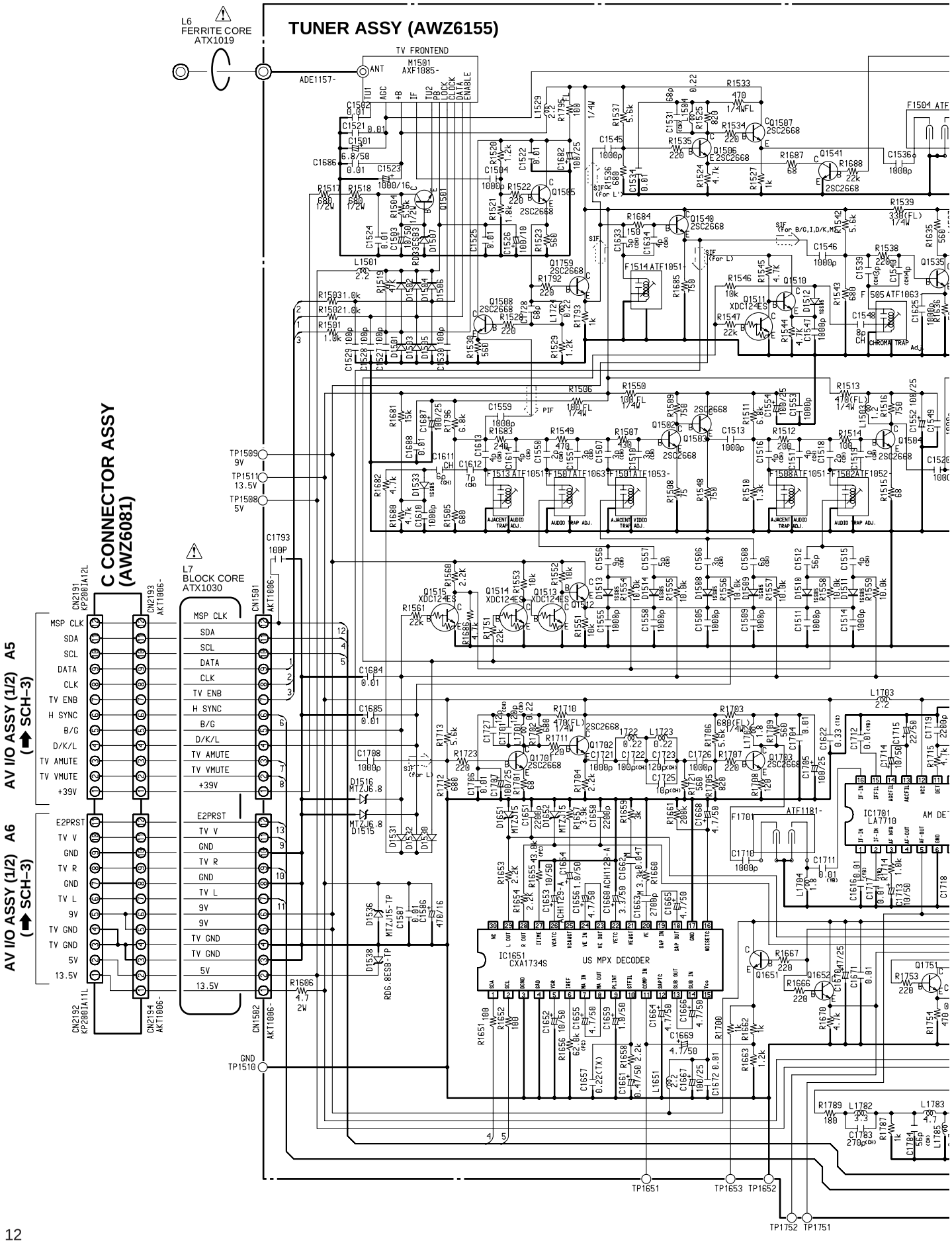

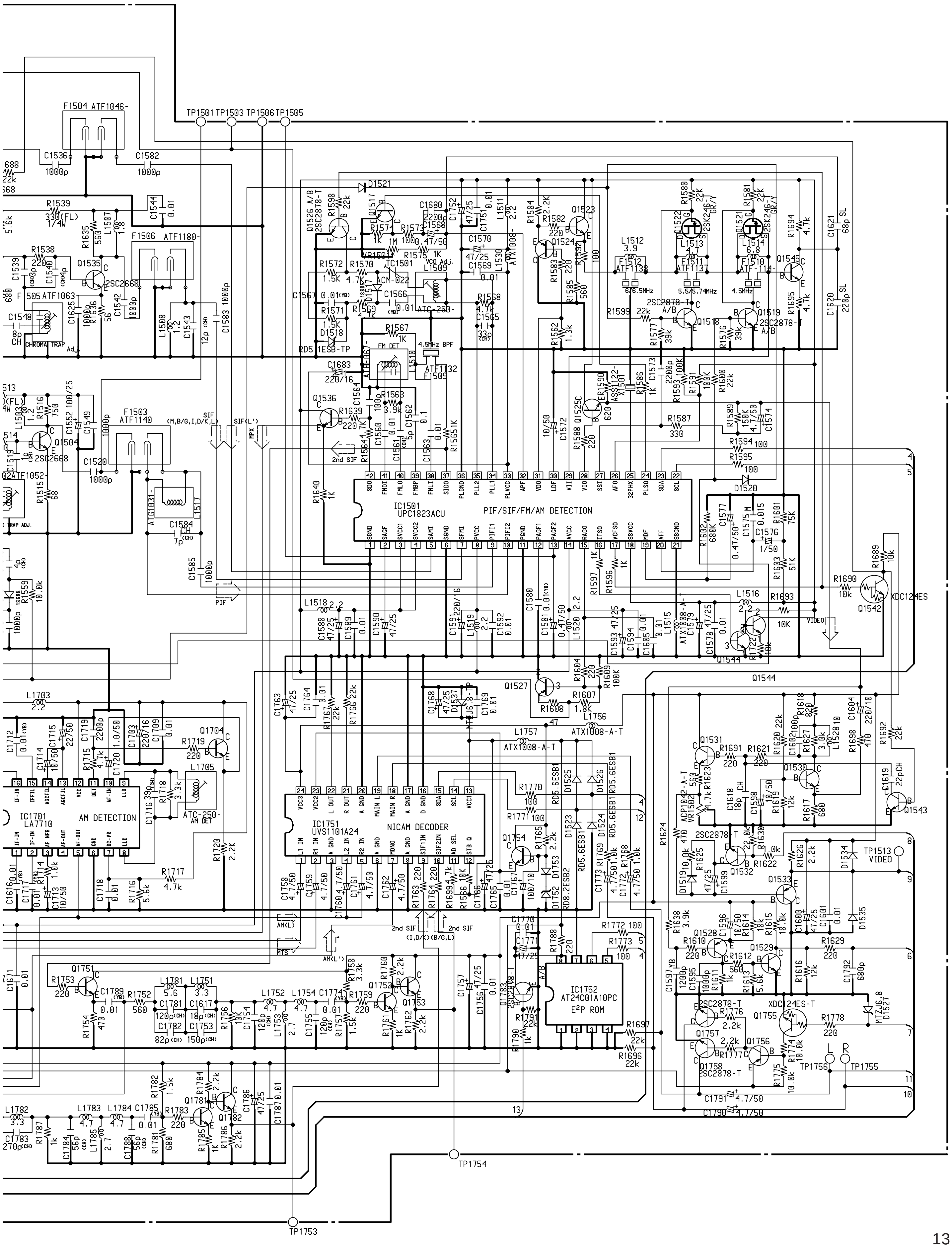
IC1501
UPC1823ACU
PIF/SIF/FM/AM DETECTION
IC1701
LA7710
AM DETECTION
IC1751
UVS1101A24
NICAM DECODER
IC1752
AT24C01A10PC
E2P ROM
F1504 ATF1046-
F1506 ATF1180-
F1503 ATF1140
F1509 ATF1132
4.5MHz BPF
FM DET
CHROMA TRAP Adj.
VCO Adj.
ATC-250-
ATC-250- AM DET
F1512 ATF1138
F1511 ATF1137
F1510 ATF-114-
6/6.5MHz
5.5/5.74MHz
4.5MHz
TP1501
TP1503
TP1506
TP1505
TP1513 VIDEO
TP1753
TP1754
TP1755
TP1756
2nd SIF
PIF
MTS
AM(L)
AM(L')
VIDEO

2.4 AV I/O ASSY

Only the differences in the AV I/O assy between WYZI7/2 type and SL type are shown.

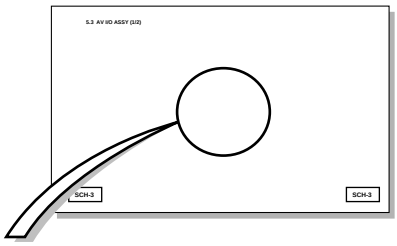

AV I/O ASSY (1/2) (AWZ6121)

AV I/O BLOCK

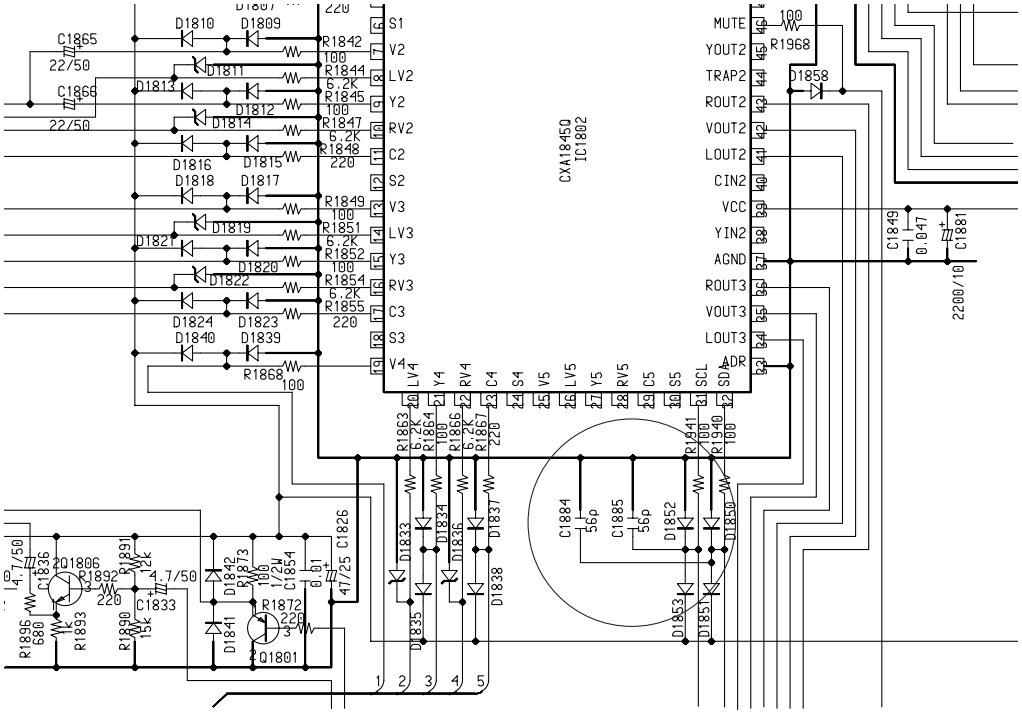

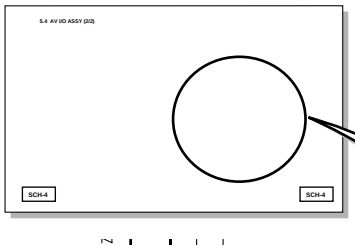

AV I/O ASSY (2/2) (AWZ6121)

TELETEXT BLOCK

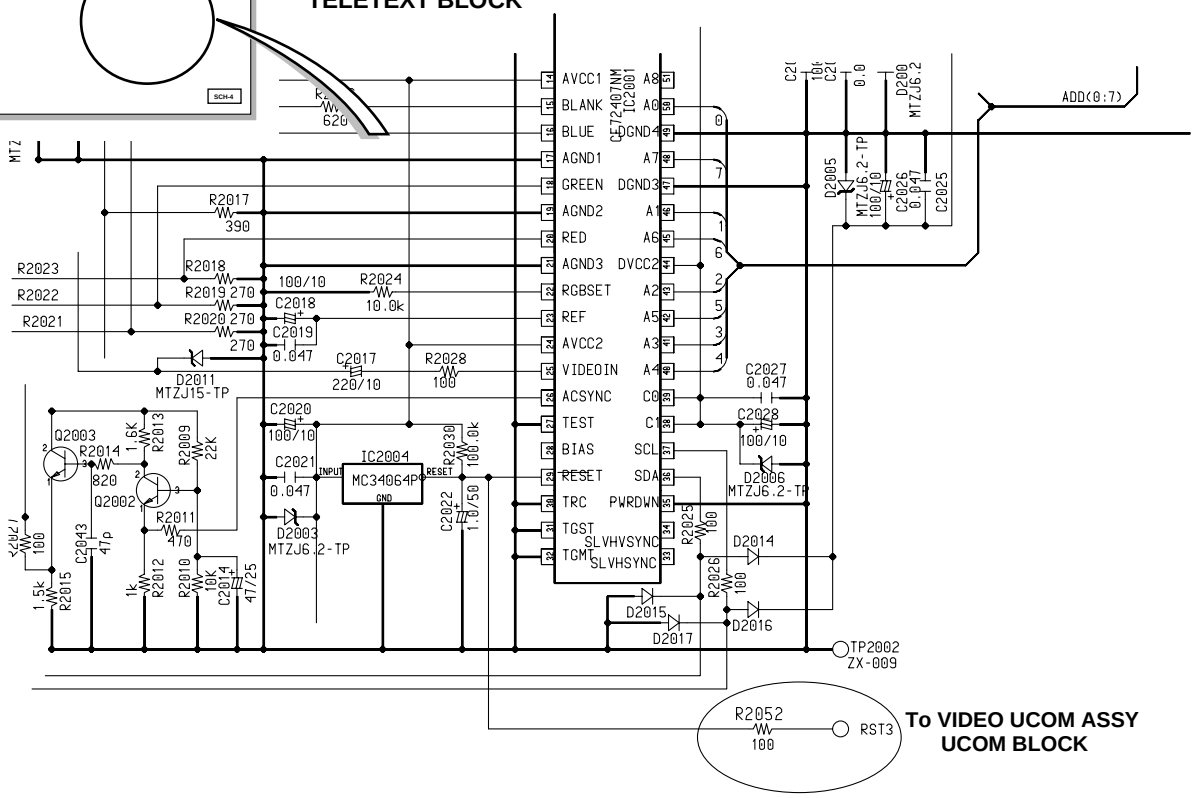

2.5 VIDEO • UCOM ASSY (1/2)

Only the differences in the VIDEO • UCOM assy (1/2) between WYZI7/2 type and SL type are shown.

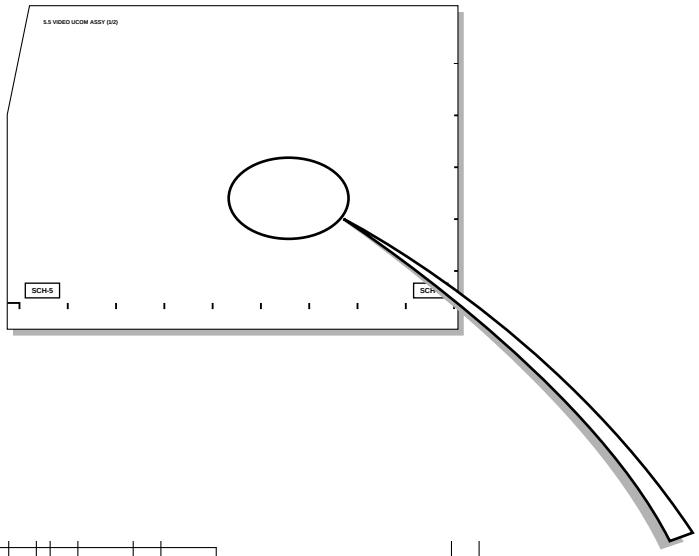

VIDEO • UCOM ASSY (1/2)
(AWV1566)

VIDEO BLOCK

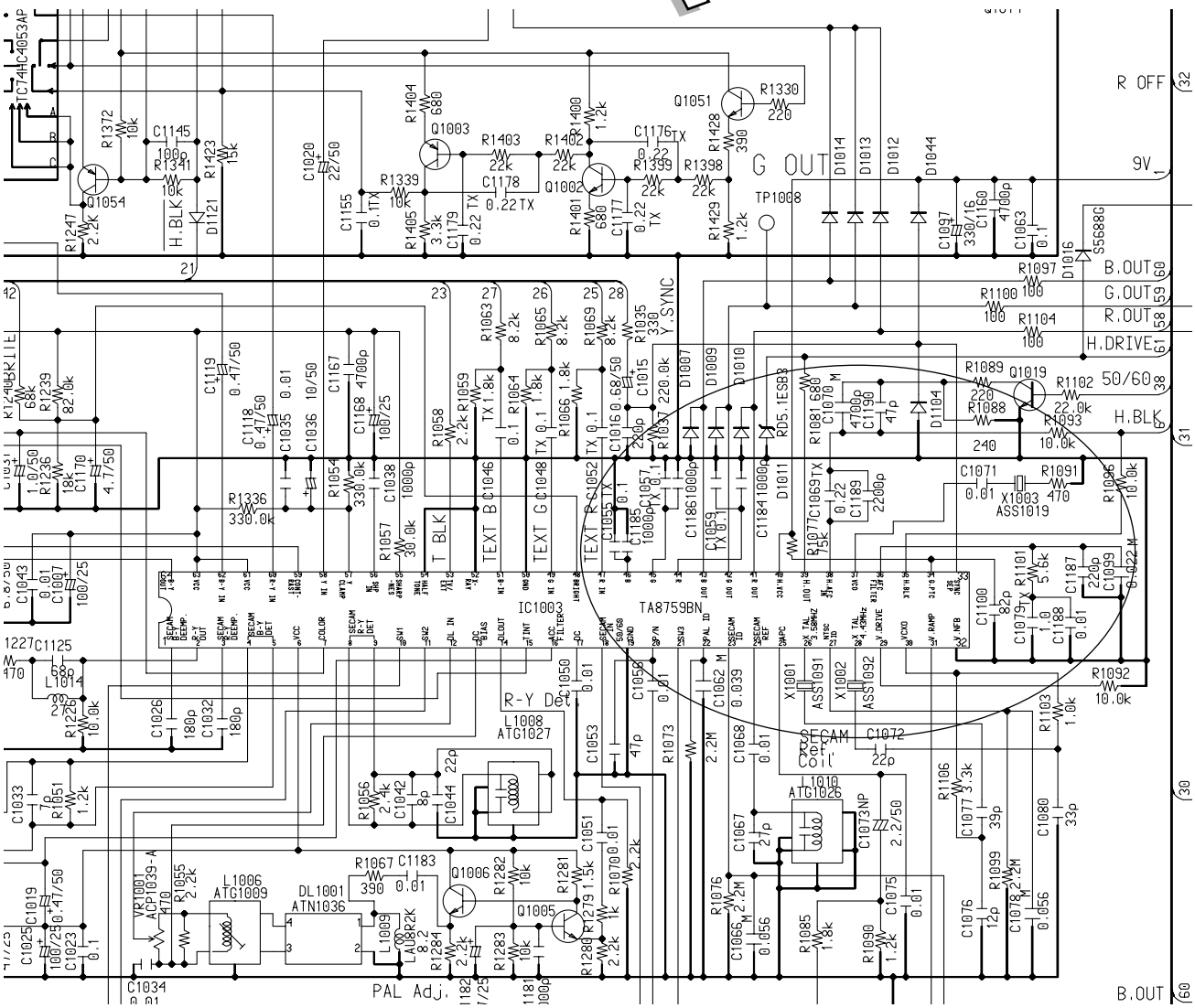

2.6 VIDEO • UCOM ASSY (2/2)

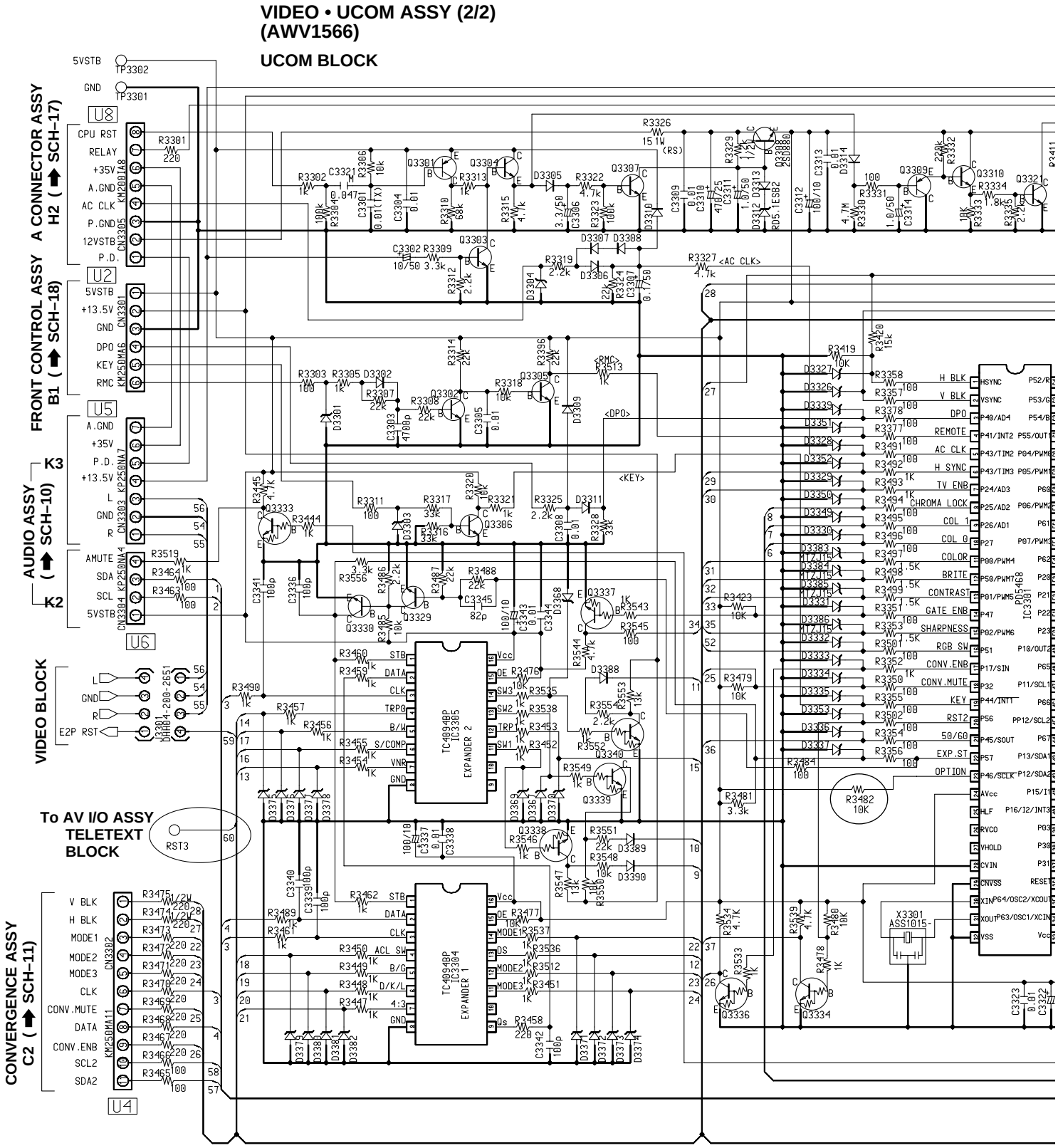

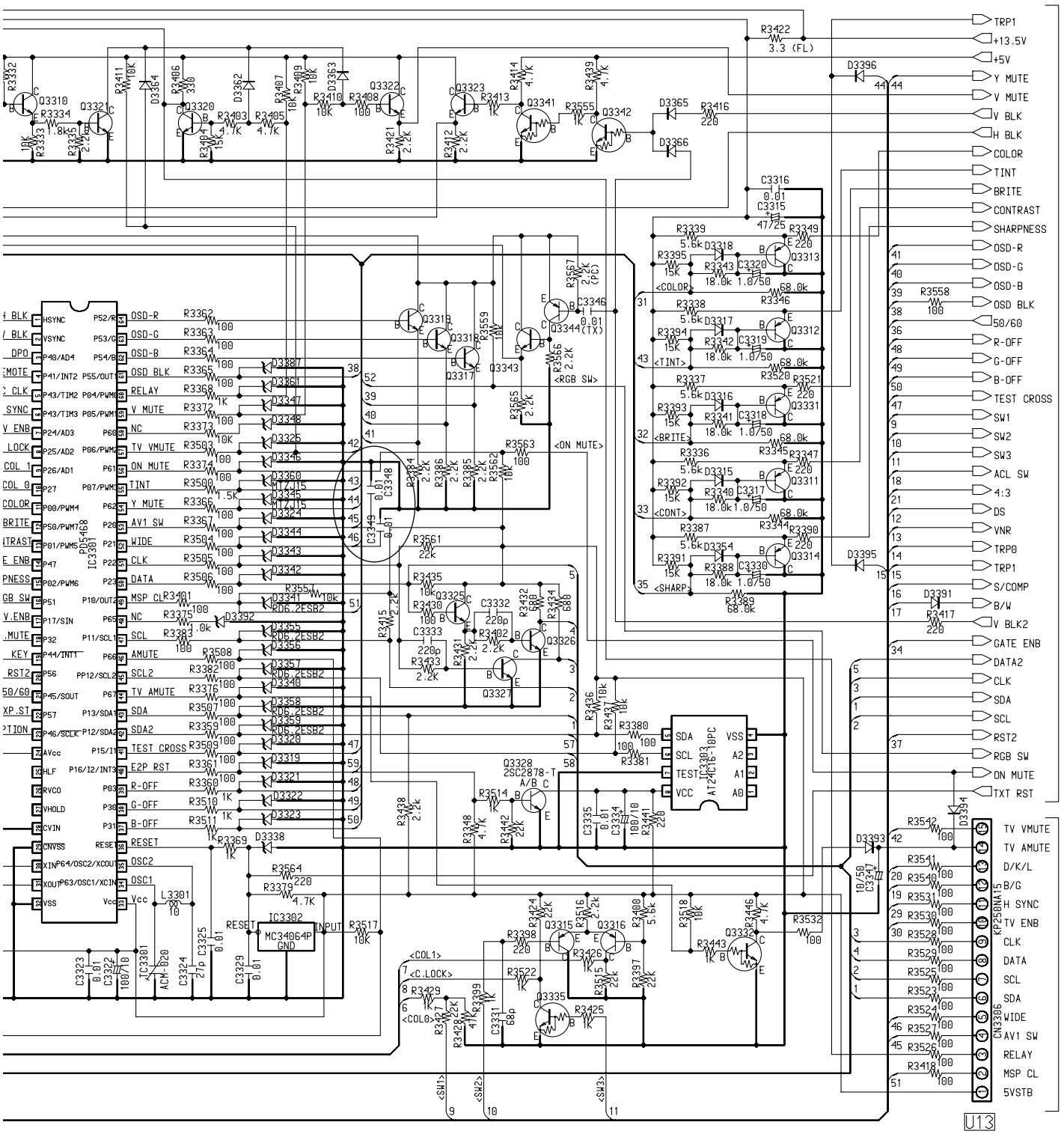
VIDEO BLOCK
AV I/O ASSY (1/2)
A10 (➡ SCH-3)
IC3301
PD5468
IC3302
MC34064P
IC3303
AT24C16-10PC
CN3306
KP250NA15
U13
TRP1
+13.5V
+5V
Y MUTE
V MUTE
V BLK
H BLK
COLOR
TINT
BRITE
CONTRAST
SHARPNESS
OSD-R
OSD-G
OSD-B
OSD BLK
50/60
R-OFF
G-OFF
B-OFF
TEST CROSS
SW1
SW2
SW3
ACL SW
4:3
DS
VNR
TRP0
S/COMP
B/W
V BLK2
GATE ENB
DATA2
CLK
SDA
SCL
RST2
RGB SW
ON MUTE
TXT RST
TV VMUTE
TV AMUTE
D/K/L
B/G
H SYNC
TV ENB
CLK
DATA
SCL
SDA
WIDE
AV1 SW
RELAY
MSP CL
5VSTB
<RGB SW>
<ON MUTE>
<COLOR>
<TINT>
<BRITE>
<CONT>
<SHARP>
<COL1>
<C.LOCK>
<COL0>
<SW1>
<SW2>
<SW3>

2.7 AUDIO ASSY

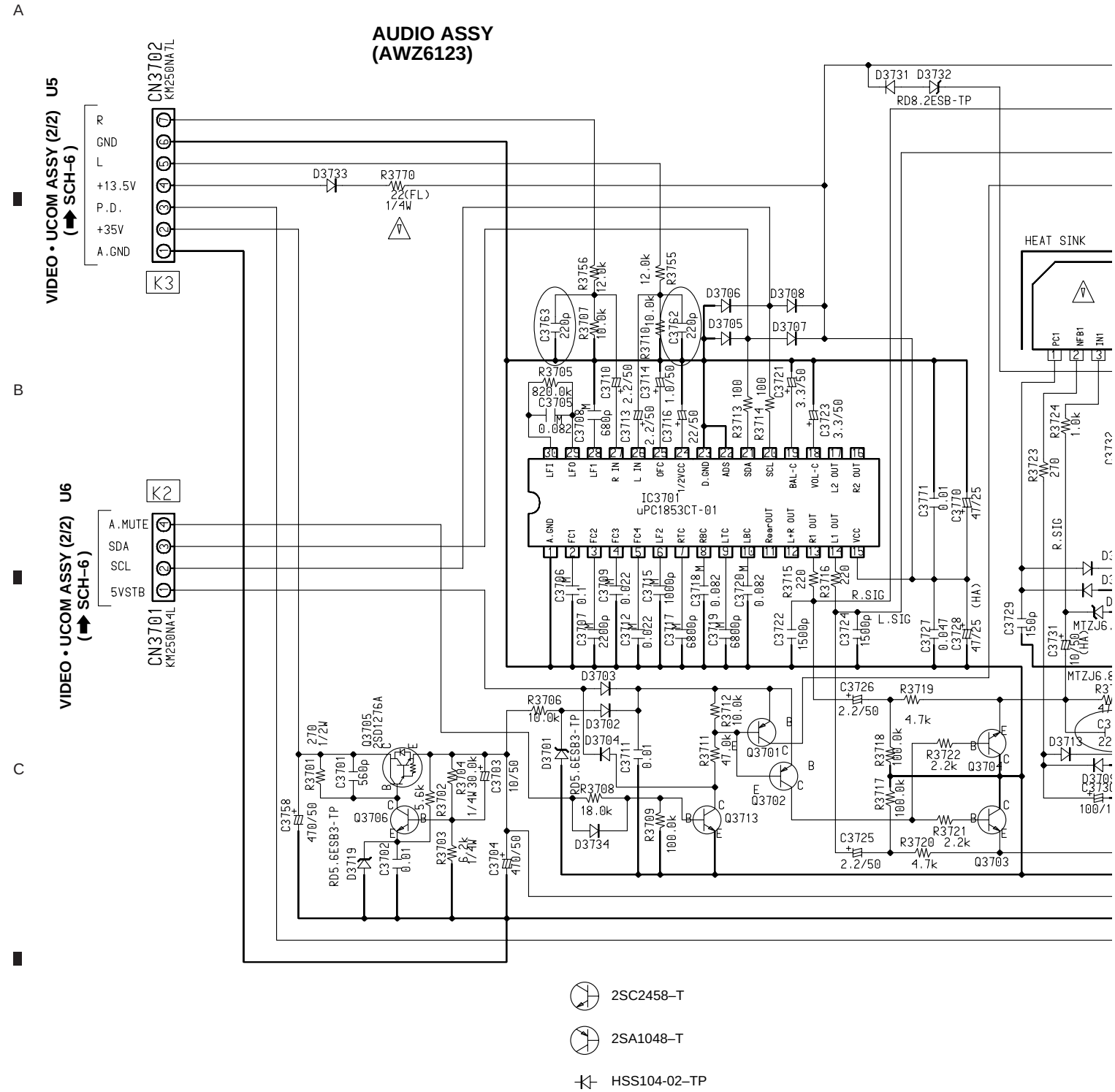

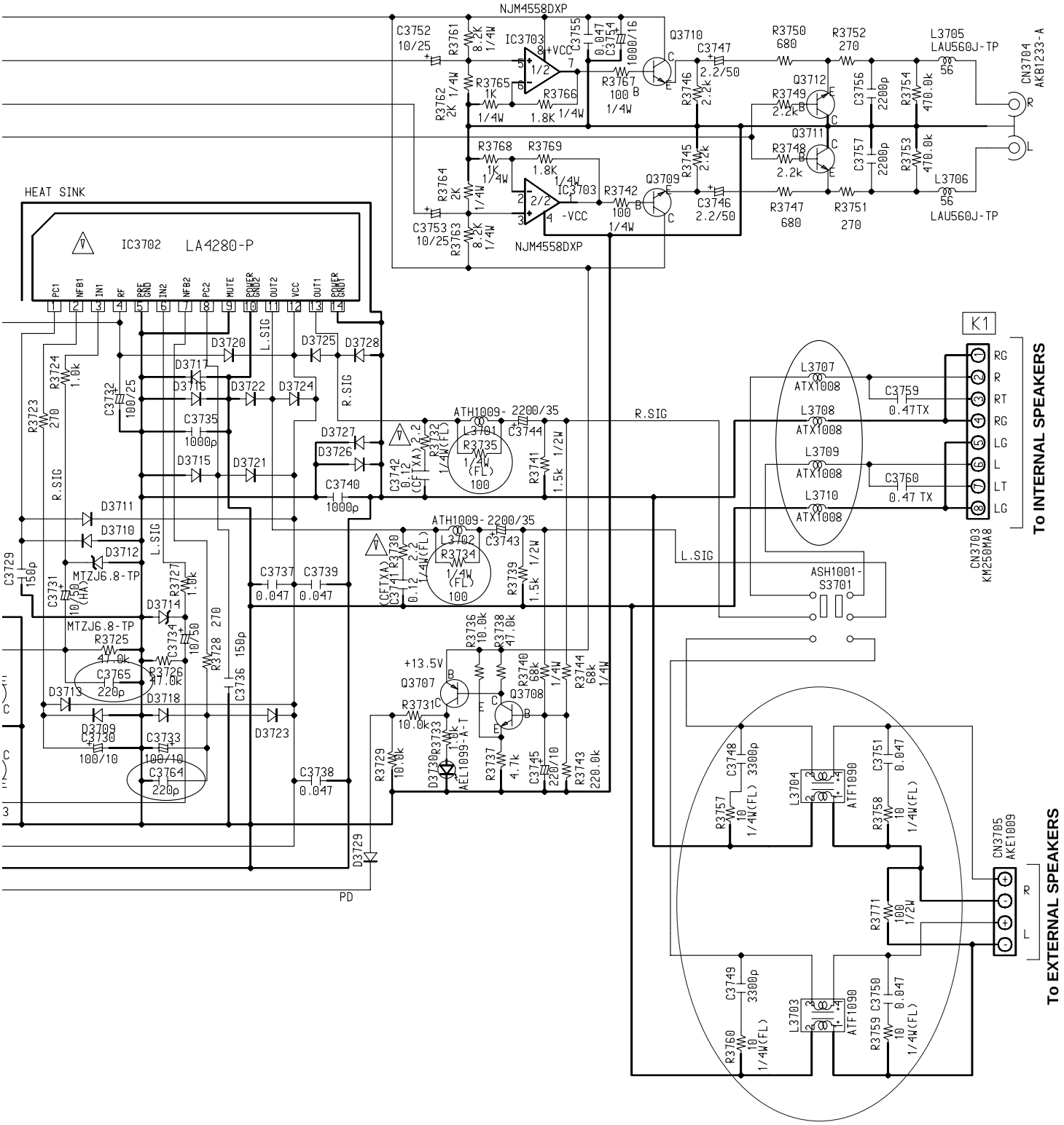
NJM4558DXP
IC3703
+VCC
-VCC
Q3710
Q3712
Q3711
Q3709
Q3707
Q3708
CN3704
AKB1233-A
L3705
LAU560J-TP
L3706
LAU560J-TP
HEAT SINK
IC3702
LA4280-P
PC1
NFB1
IN1
RF
PRE GND
IN2
NFB2
PC2
MUTE
POWER GND2
OUT2
VCC
OUT1
POWER GND1
L.SIG
R.SIG
PD
ATH1009-2200/35
L3701
L3702
ASH1001-S3701
K1
CN3703
KM250MA8
To INTERNAL SPEAKERS
L3707
ATX1008
L3708
ATX1008
L3709
ATX1008
L3710
ATX1008
RG
R
RT
RG
LG
L
LT
LG
CN3705
AKE1009
To EXTERNAL SPEAKERS
L3704
ATF1090
L3703
ATF1090
+13.5V
AEL1099-A-T
MTZJ6.8-TP

2.8 CONVERGENCE ASSY

Only the differences in the convergence assy between WYZI7/2 type and SL type are shown.

CONVERGENCE ASSY (AWV1547)

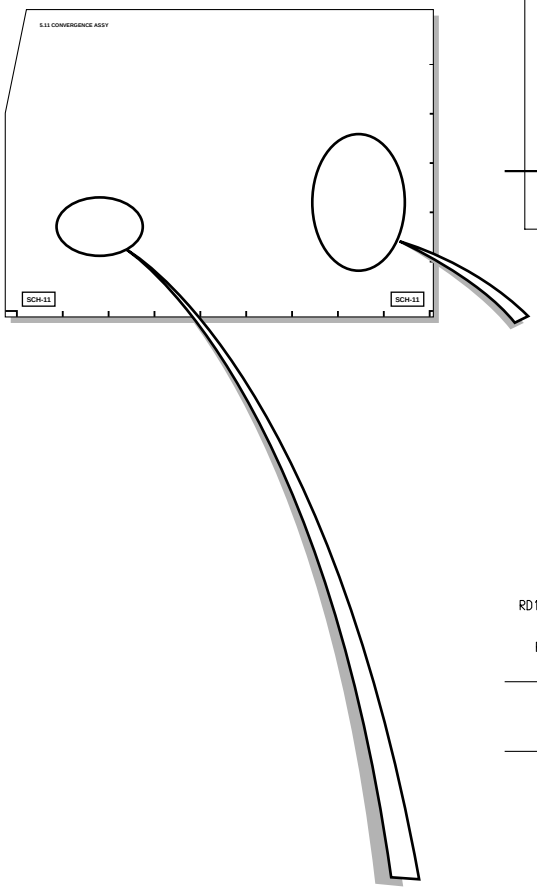

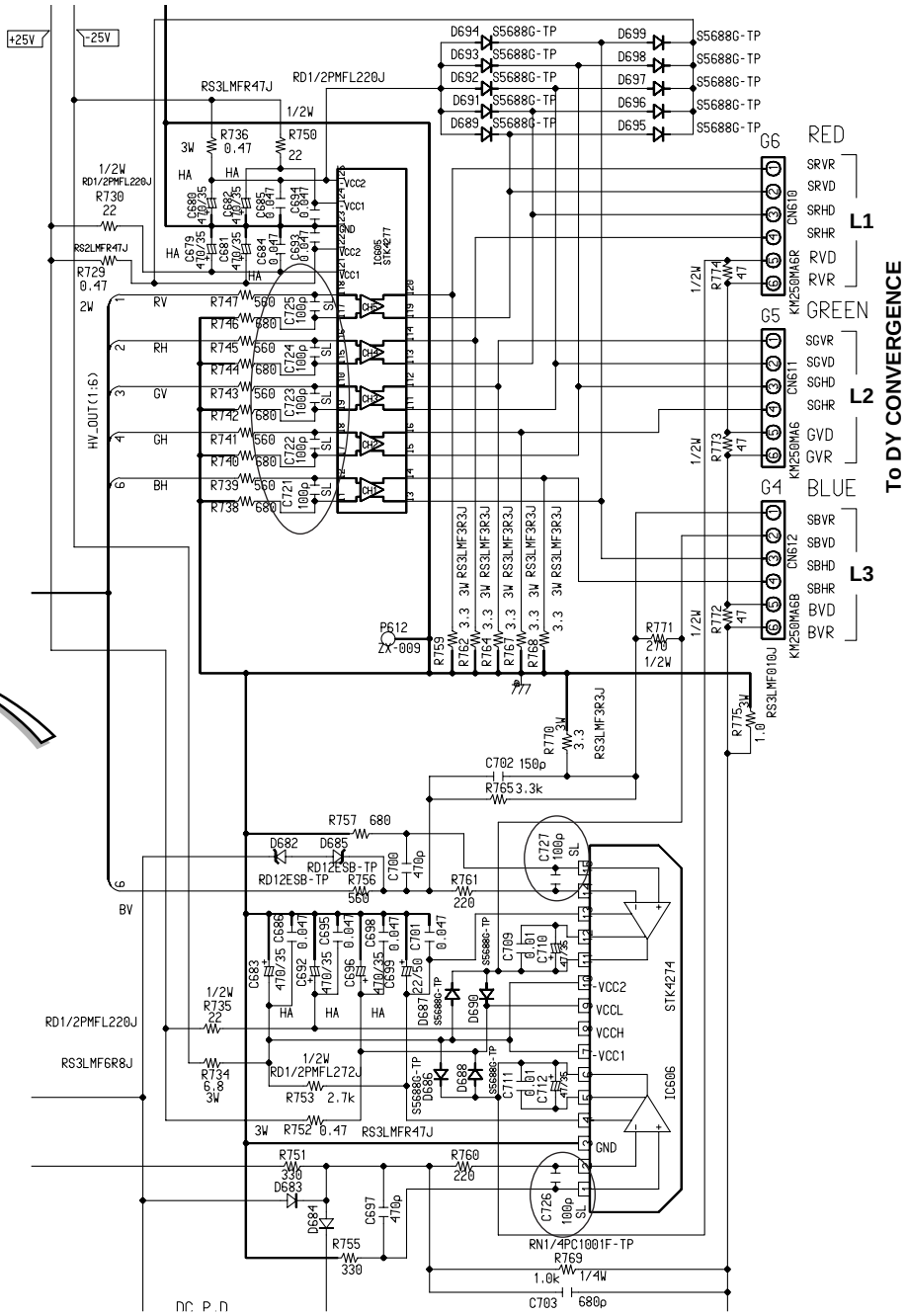

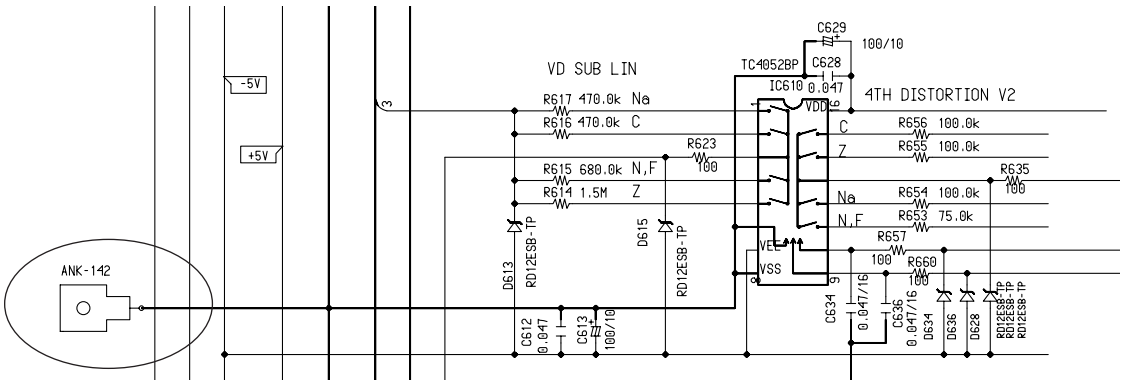

4. ADJUSTMENT

Note: Only the differences in the adjustment between WYZI7/2 type and SL type are shown.

4.1 WHEN TUNER ASSY WAS REPAIRED

● For System B/G

Step No.	Adjustment Item	Input Signal	Adjustment Point	Adjustment Procedure
4	Adjacent audio trap adjustment for system B	③ B	F1508 (T)	Adjust so that the 40.4 MHz carrier level of TP1501 (SAW IN) becomes minimum.

4.2 WHEN POWER SUPPLY ASSY WAS REPAIRED

● 135V Power Supply Adjustment
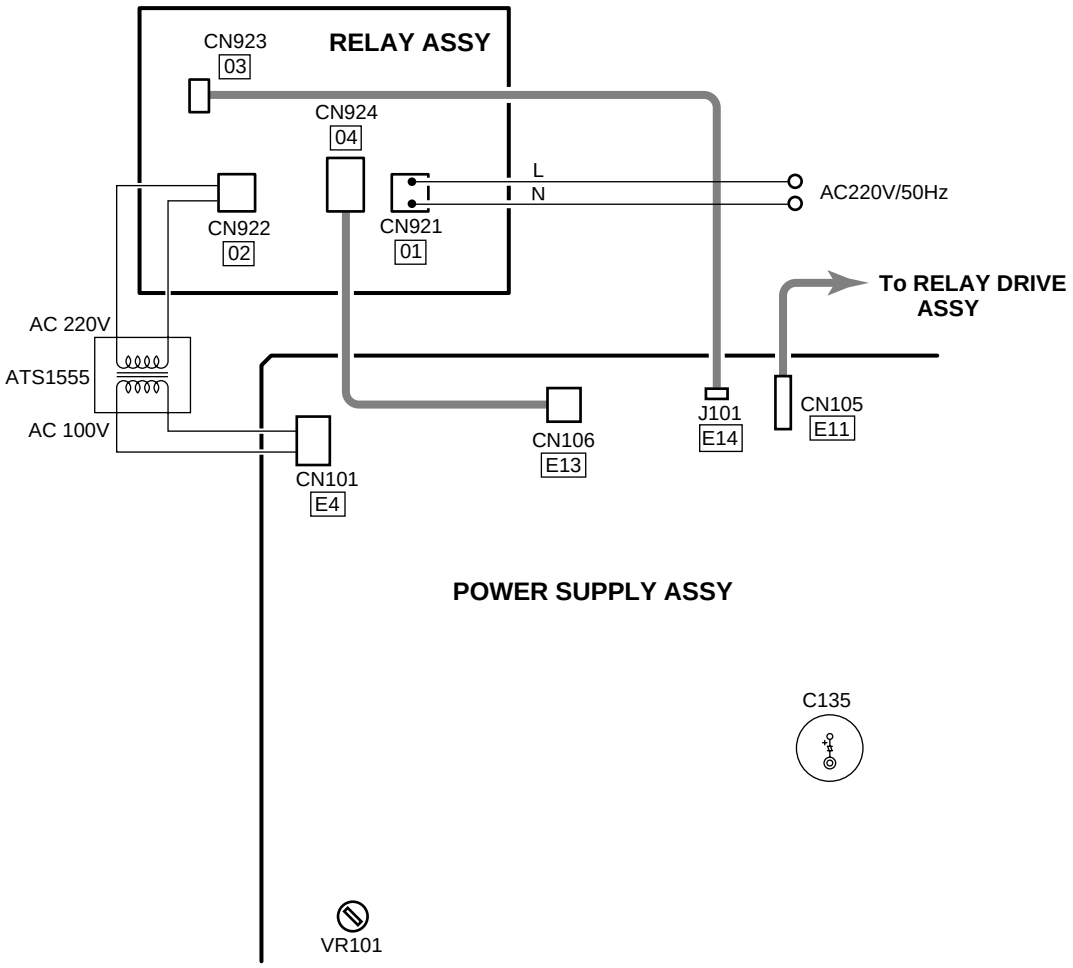
Step No.	Adjustment Item	Input Signal	Adjustment Point	Adjustment Procedure
1	135V power supply adjustment	Monoscope signal	VR101	Adjust so that the voltage of both sides of C135 becomes 135 V ±0.5 V.