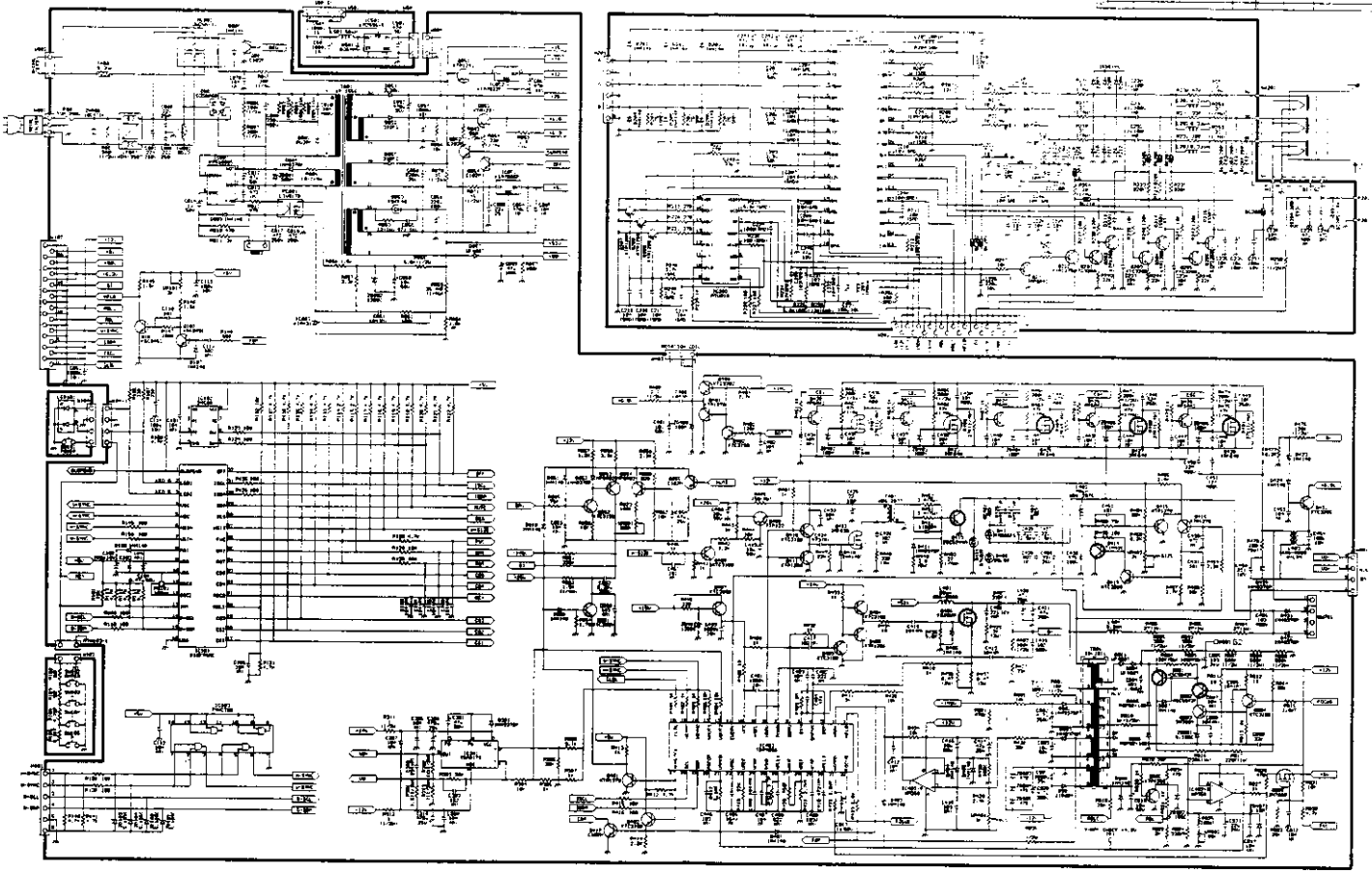

▶ NOTICE FOR PARTS MARKED "!", PARTS SPECIFIED BY THE PRODUCT COMPANY SHOULD BE USED TO PREVENT IT FROM ELECTRICAL SHOCK

▶ NOTE

1. THE UNIT OF RESISTANCE "OHM" IS OMITTED.
2. THE UNIT OF CAPACITANCE "FARAD" IS OMITTED.
3. (M) REPRESENTS MYLER CAPACITOR. (R) REPRESENTS AXIAL CAPACITOR.
4. TOLERANCE OF ALL RESISTOR VALUE IS +/-5%, OTHERWISE NOTED.
5. POWER RATING OF RESISTER IS 1/6W OTHERWISE NOTED.
6. TOLERANCE RATING OF CAPACITOR IS INDICATED BY MEANS OF [illegible]
7. FOR PARTS MARKED "*", VALUE OF PARTS VARIES WITH EACH DIFFERENT TYPE CAR.

DRAWING	DESIGN	CHECK	APPROVAL	MODEL NAME	KE-1910	STEP	LPP
				DESCRIPTION	MAIN, MECH	UNIT	mm
				DRAWING NO.	SCH-1GAAN-R	SCALE	
				ROT NO.	K-38025	DATE	99.8.31

© PIONEER CORPORATION SYSTEMS CO., LTD. SCH