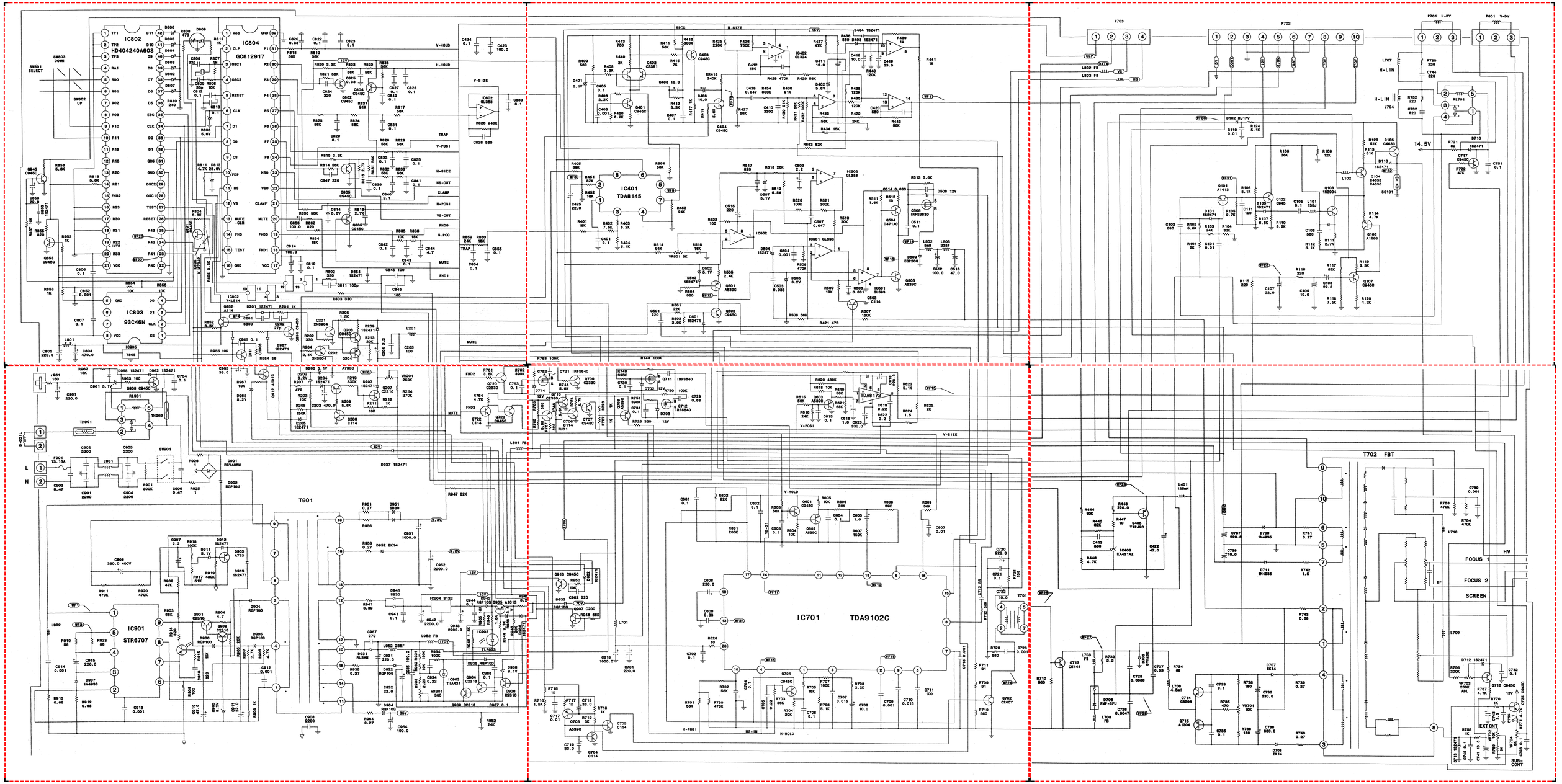
IC802
HD404240A60S
IC804
GC812917
IC803
93C46N
IC401
TDA8145
IC701
TDA9102C
IC901
STR6707
T901
T702 FBT
FOCUS 1
FOCUS 2
SCREEN
HV
EXT CNT
SUB-CONT
14.5V
V-HOLD
H-HOLD
V-SIZE
H-SIZE
TRAP
V-POSI
H-POSI
HS-IN
MUTE
H-LIN
P701 H-DY
P601 V-DY
P703
P702

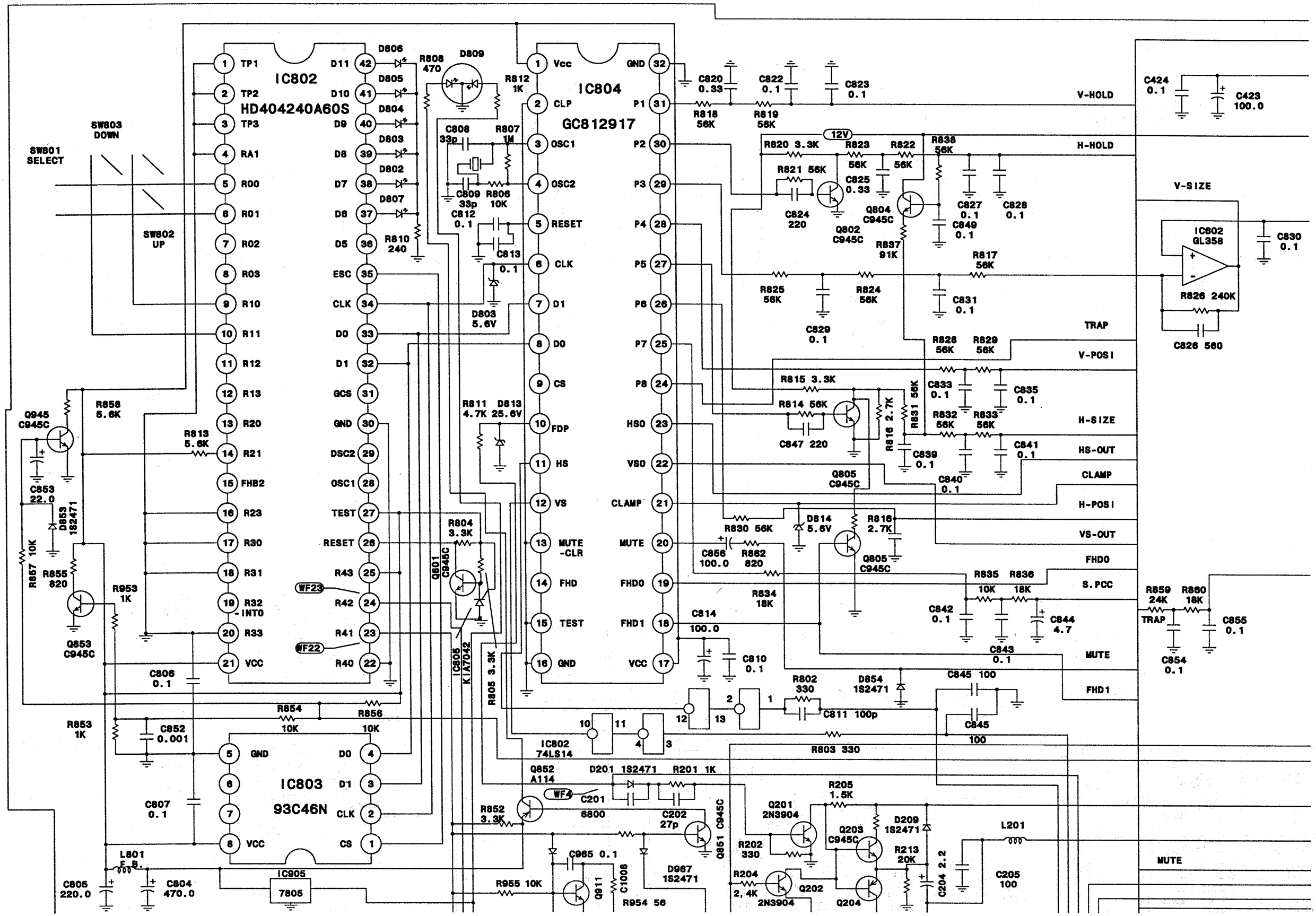

IC802
HD404240A60S
IC804
GC812917
IC803
93C46N
IC802
74LS14
IC805
KIA7042
IC905
7805
SW801
SELECT
SW802
UP
SW803
DOWN
V-HOLD
H-HOLD
V-SIZE
TRAP
V-POSI
H-SIZE
HS-OUT
CLAMP
H-POSI
VS-OUT
FHD0
S.PCC
MUTE
FHD1
IC802
GL358

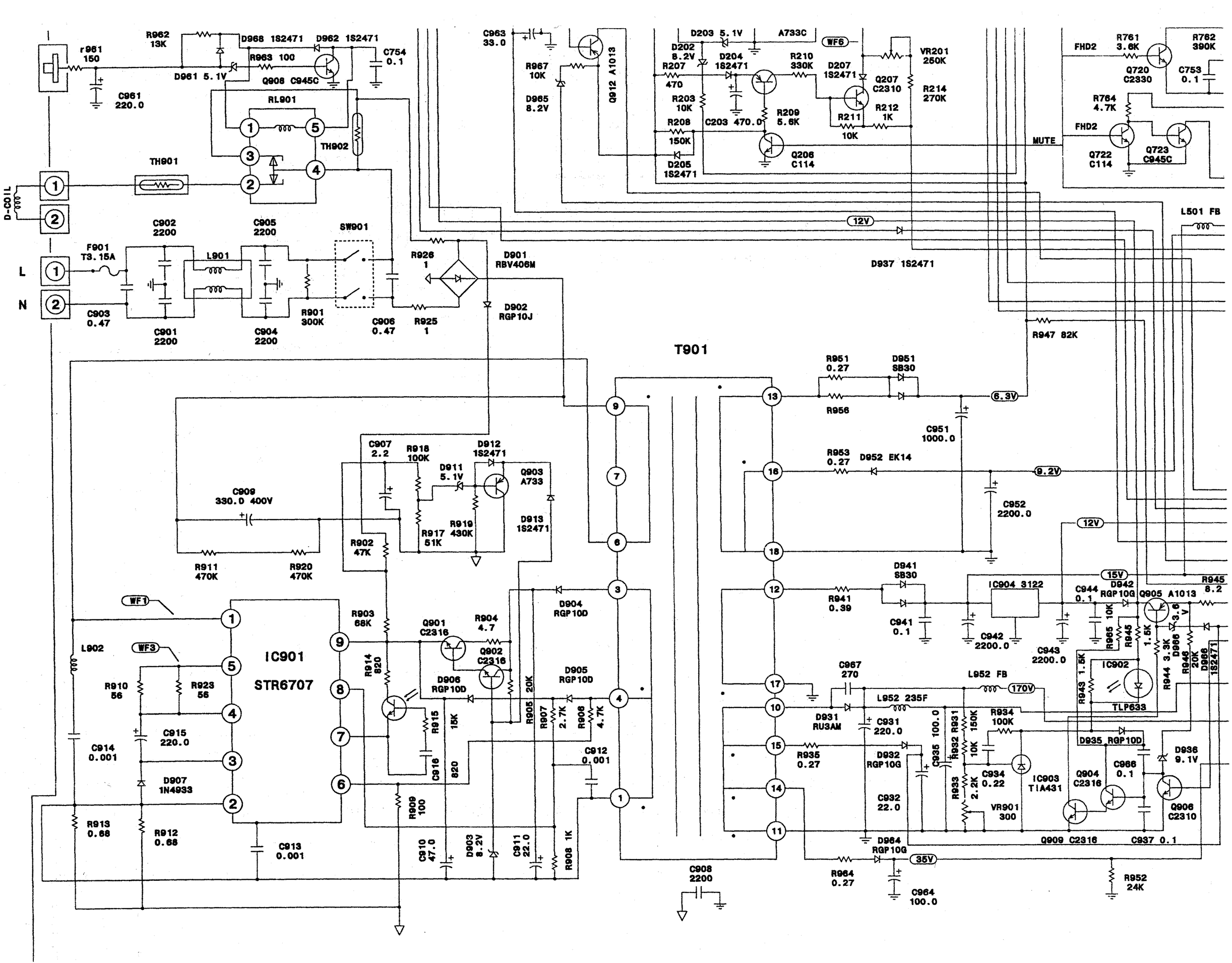

r961 150
C961 220.0
R962 13K
D968 1S2471
D962 1S2471
R963 100
D961 5.1V
Q908 C945C
C754 0.1
RL901
TH902
TH901
D-COIL
L
N
F901 T3.15A
C903 0.47
C902 2200
C901 2200
L901
C905 2200
C904 2200
R901 300K
SW901
C906 0.47
R926 1
R925 1
D901 RBV406M
D902 RGP10J
C963 33.0
R967 10K
D965 8.2V
Q912 A1013
D203 5.1V
A733C
WF6
D202 8.2V
R207 470
D204 1S2471
R210 330K
D207 1S2471
Q207 C2310
VR201 250K
R214 270K
R203 10K
C203 470.0
R209 5.6K
R211 10K
R212 1K
R208 150K
D205 1S2471
Q206 C114
MUTE
FHD2
R761 3.6K
R762 390K
Q720 C2330
C753 0.1
R764 4.7K
Q722 C114
Q723 C945C
12V
D937 1S2471
L501 FB
R947 82K
T901
R951 0.27
D951 SB30
R956
6.3V
C951 1000.0
R953 0.27
D952 EK14
9.2V
C952 2200.0
C907 2.2
R918 100K
D912 1S2471
D911 5.1V
Q903 A733
C909 330.0 400V
R917 51K
R919 430K
D913 1S2471
R902 47K
R911 470K
R920 470K
WF1
WF3
L902
IC901
STR6707
R903 68K
Q901 C2316
R904 4.7
Q902 C2316
D904 RGP10D
R914 820
D906 RGP10D
D905 RGP10D
R910 56
R923 56
C915 220.0
C914 0.001
D907 1N4933
R915 15K
C916 820
R905 20K
R907 2.7K
R906 4.7K
C912 0.001
R909 100
R913 0.68
R912 0.68
C913 0.001
C910 47.0
D903 8.2V
C911 22.0
R908 1K
C908 2200
D941 SB30
R941 0.39
C941 0.1
IC904 3122
C942 2200.0
C943 2200.0
C944 0.1
D942 RGP10G
Q905 A1013
R945 8.2
R965 10K
R945 1.5K
R944 3.3K
D966 3.6V
R946 20K
D966 1S2471
IC902
TLP633
R943 1.5K
C967 270
L952 FB
170V
L952 235F
D931 RU3AM
C931 220.0
R935 0.27
D932 RGP10G
C935 100.0
R932 R931 150K
R934 100K
R933 2.2K
C934 0.22
IC903 TIA431
VR901 300
C932 22.0
D935 RGP10D
D936 9.1V
C966 0.1
Q904 C2316
Q906 C2310
Q909 C2316
C937 0.1
D964 RGP10G
35V
R964 0.27
C964 100.0
R952 24K

SPCC
H.SIZE
15V
D404 1S2471
D403 1S2471
R436 560
R437 47K
R439 1M
R441 1K
R425 220K
R426 750K
IC402 GL324
C411 10.0
C412 180
C418 10.0
C419 33.0
R440 120K
R428 470K
R429 56K
R413 750
R411 56K
R416 300K
Q403 C945C
R415 75
R449 3K
R409 560
R408 3.3K
Q402 C3381
D401 5.1V
C405 0.1
C406 10.0
RR418 240K
C408 10.0
R412 3.3K
R406 2.2K
Q401 C945C
C403 0.001
R450 8.2K
C407 0.1
R417 1K
R419
5.6K
Q404 C945C
WF10
C428 0.047
R454 300K
R430 91K
C410 3300
R427 56K
D402 5.6V
R438 120K
R435 120K
R433 56K
R434 15K
R422 24K
C420 560
R443 56K
WF1
R863 82K
R405 39K
R864 56K
WF8
R451 82K
IC401 TDA8145
R452 16K
C425 22.0
R453 24K
WF9
R401 18K
R402 7.5K
R403 6.2K
C401 0.1
R404 5.1K
R514 91K
VR501 5K
R516 16K
R517 820
R518 20K
C509 2.2
IC502 GL358
D507 5.1V
R519 6.8M
R520 100K
R521 300K
C507 0.047
R510 20K
R522 100
C515 220
IC502
D502 5.1V
D503 1S2471
R505 2.4K
Q501 A539C
R504 560
WF12
R501 22K
C501 220
R502 3.9K
D501 1S2471
Q502 C945C
R513 5.6K
C514 0.033
D508 12V
R511 1.6K
R512 10
Q506 IRFS9630
Q504 D471AC
C511 0.1
WF14
L502 5mH
L503 235F
D509 EGP20G
C512 100.0
C513 47.0
WF13
Q505 A539C
IC501 GL393
D504 1S2471
C504 0.001
R506 470K
D505 8.2V
C503 0.033
R509 10K
C506 0.001
IC501 GL393
Q503 C114
R507 150K
R508 56K
R421 470
R763 100K
R748 100K

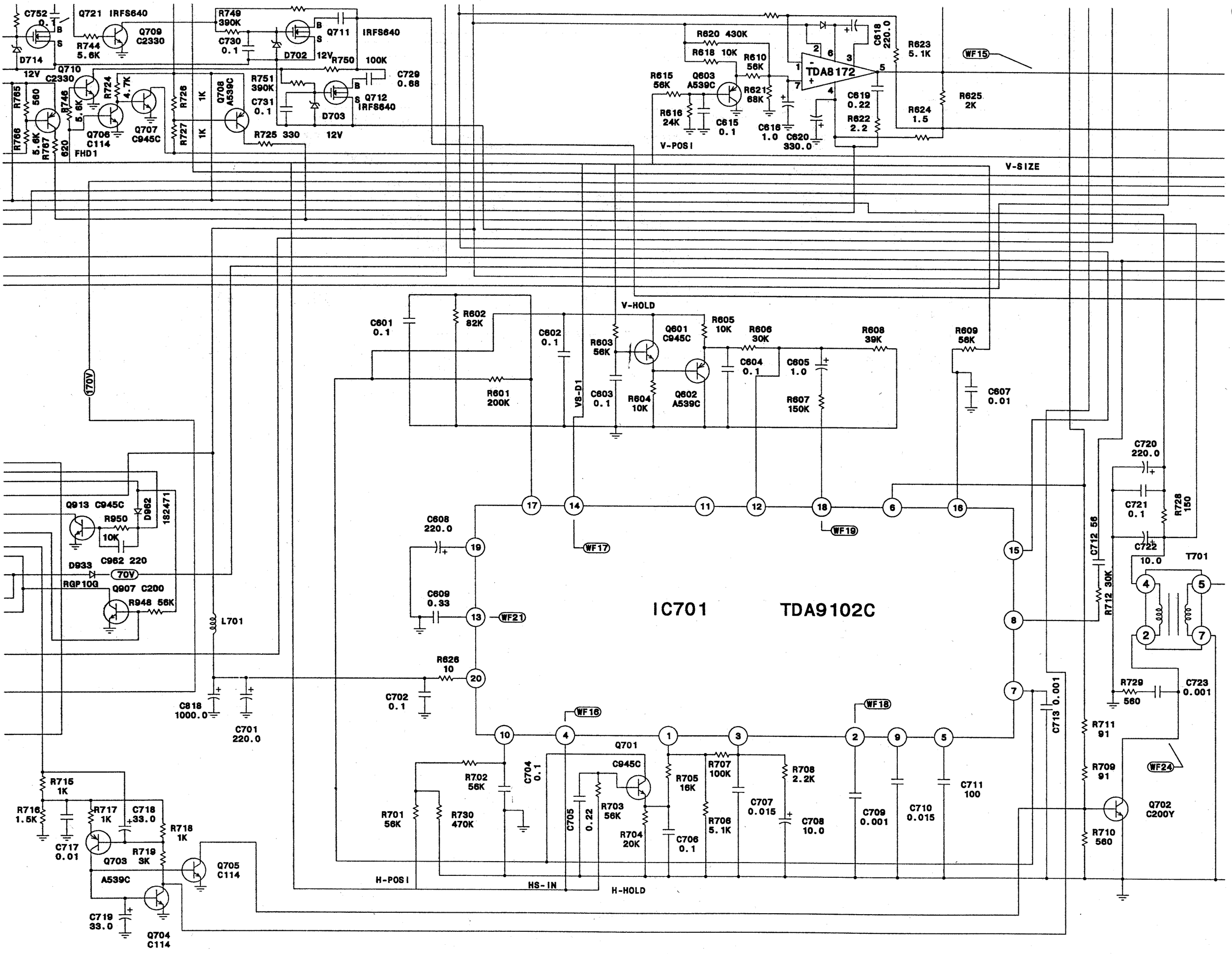
C752 0.1
Q721 IRFS640
R744 5.6K
Q709 C2330
D714 12V
Q710 C2330
R765 560
R766 5.6K
R767 620
R746 5.6K
R724 4.7K
Q706 C114 FHD1
Q707 C945C
R726 1K
R727 1K
Q708 A539C
R749 390K
C730 0.1
Q711 IRFS640
D702 12V
R750 100K
C729 0.68
R751 390K
C731 0.1
Q712 IRFS640
D703
R725 330
12V
R620 430K
R618 10K
R610 56K
R615 56K
Q603 A539C
R621 68K
R616 24K
C615 0.1
V-POSI
C616 1.0
C620 330.0
TDA8172
C618 220.0
R623 5.1K
WF15
C619 0.22
R622 2.2
R624 1.5
R625 2K
V-SIZE
C601 0.1
R602 82K
R601 200K
C602 0.1
V8-D1
V-HOLD
R603 56K
C603 0.1
R604 10K
Q601 C945C
Q602 A539C
R605 10K
R606 30K
C604 0.1
C605 1.0
R607 150K
R608 39K
R609 56K
C607 0.01
170V
Q913 C945C
R950 10K
D962 182471
D933 RGP10G
C962 220
70V
Q907 C200
R948 56K
L701
C818 1000.0
C701 220.0
C608 220.0
C609 0.33
R626 10
C702 0.1
IC701 TDA9102C
WF16
WF17
WF18
WF19
WF21
Q701
C945C
R702 56K
C704 0.1
R701 56K
R730 470K
C705 0.22
R703 56K
R704 20K
R705 16K
R707 100K
C706 0.1
R706 5.1K
C707 0.015
R708 2.2K
C708 10.0
C709 0.001
C710 0.015
C711 100
C713 0.001
H-POSI
HS-IN
H-HOLD
R715 1K
R716 1.5K
R717 1K
C718 33.0
R718 1K
C717 0.01
Q703
R719 3K
A539C
Q705 C114
C719 33.0
Q704 C114
C720 220.0
C721 0.1
R728 150
C722 10.0
T701
C712 56
R712 30K
R729 560
C723 0.001
R711 91
R709 91
WF24
Q702 C200Y
R710 560

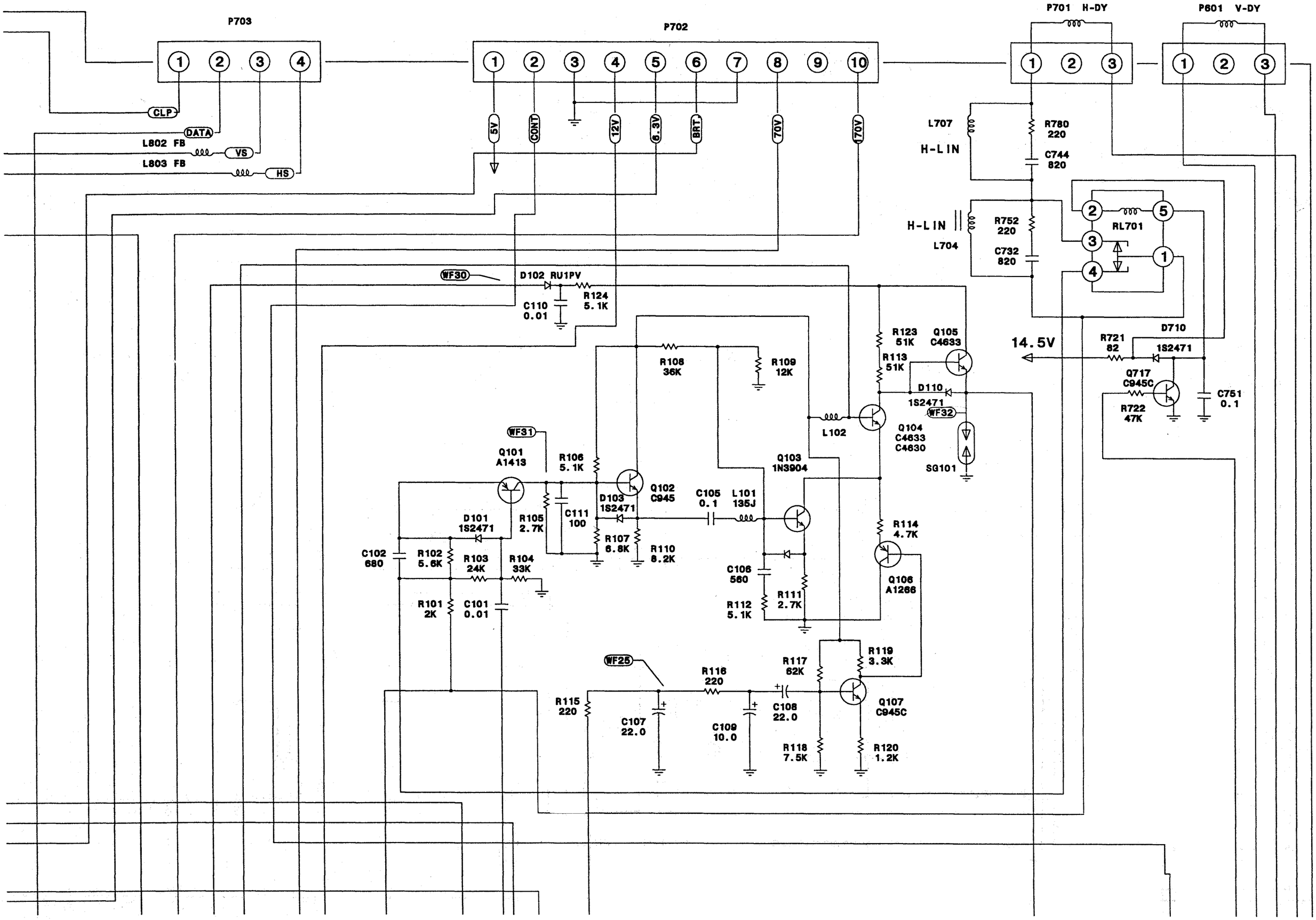
P703
P702
P701 H-DY
P601 V-DY
CLP
DATA
VS
HS
L802 FB
L803 FB
5V
CONT
12V
6.3V
BRT
70V
170V
L707
H-LIN
R780 220
C744 820
H-LIN
L704
R752 220
C732 820
RL701
WF30
D102 RU1PV
R124 5.1K
C110 0.01
R108 36K
R109 12K
R123 51K
Q105 C4633
R113 51K
D110 1S2471
WF32
Q104 C4633 C4630
SG101
L102
14.5V
D710
R721 82
1S2471
Q717 C945C
R722 47K
C751 0.1
WF31
Q101 A1413
R106 5.1K
Q102 C945
D103 1S2471
C105 0.1
L101 135J
Q103 1N3904
R114 4.7K
D101 1S2471
R105 2.7K
C111 100
R107 6.8K
R110 8.2K
C102 680
R102 5.6K
R103 24K
R104 33K
C106 560
R111 2.7K
R112 5.1K
Q106 A1266
R101 2K
C101 0.01
WF25
R116 220
R117 62K
R119 3.3K
R115 220
C107 22.0
C109 10.0
C108 22.0
Q107 C945C
R118 7.5K
R120 1.2K

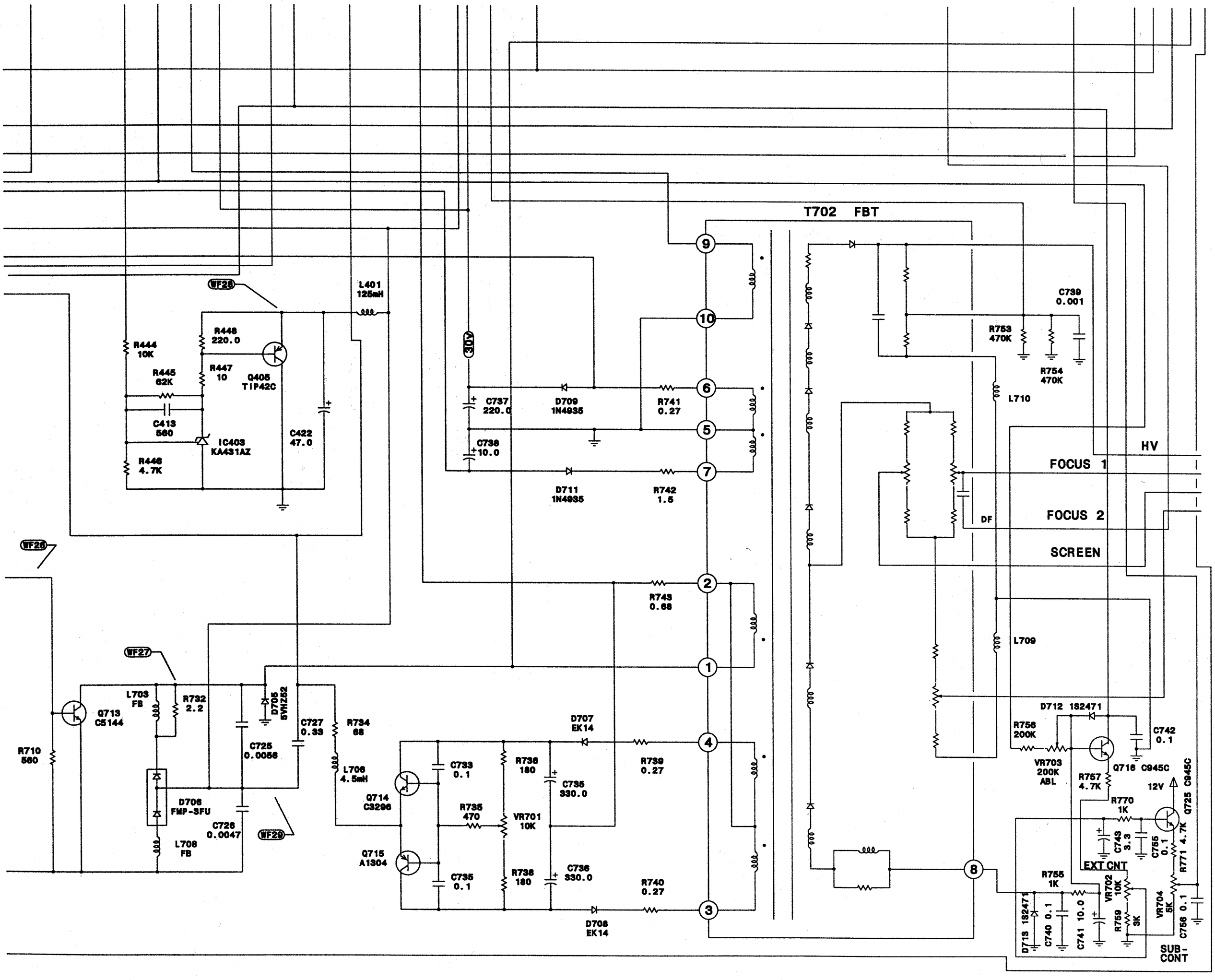
T702 FBT
WF25
L401
125mH
R444
10K
R448
220.0
R445
62K
R447
10
Q405
TIP42C
C413
560
IC403
KA431AZ
C422
47.0
R446
4.7K
30V
C737
220.0
D709
1N4935
R741
0.27
C738
10.0
D711
1N4935
R742
1.5
R743
0.68
D707
EK14
R739
0.27
C733
0.1
R736
180
C735
330.0
Q714
C3296
R735
470
VR701
10K
Q715
A1304
C735
0.1
R738
180
C736
330.0
R740
0.27
D708
EK14
C739
0.001
R753
470K
R754
470K
L710
HV
FOCUS 1
DF
FOCUS 2
SCREEN
L709
WF26
WF27
WF29
L703
FB
R732
2.2
D705
5VHZ52
C727
0.33
R734
68
C725
0.0056
L706
4.5mH
D706
FMP-3FU
C726
0.0047
L708
FB
Q713
C5144
R710
560
D712 1S2471
R756
200K
C742
0.1
VR703
200K
ABL
Q716 C945C
R757
4.7K
12V
R770
1K
Q725 C945C
C743
3.3
C755
0.1
R771 4.7K
EXT CNT
R755
1K
VR702
10K
D713 1S2471
C740 0.1
C741 10.0
R759
3K
VR704
5K
C756 0.1
SUB-
CONT
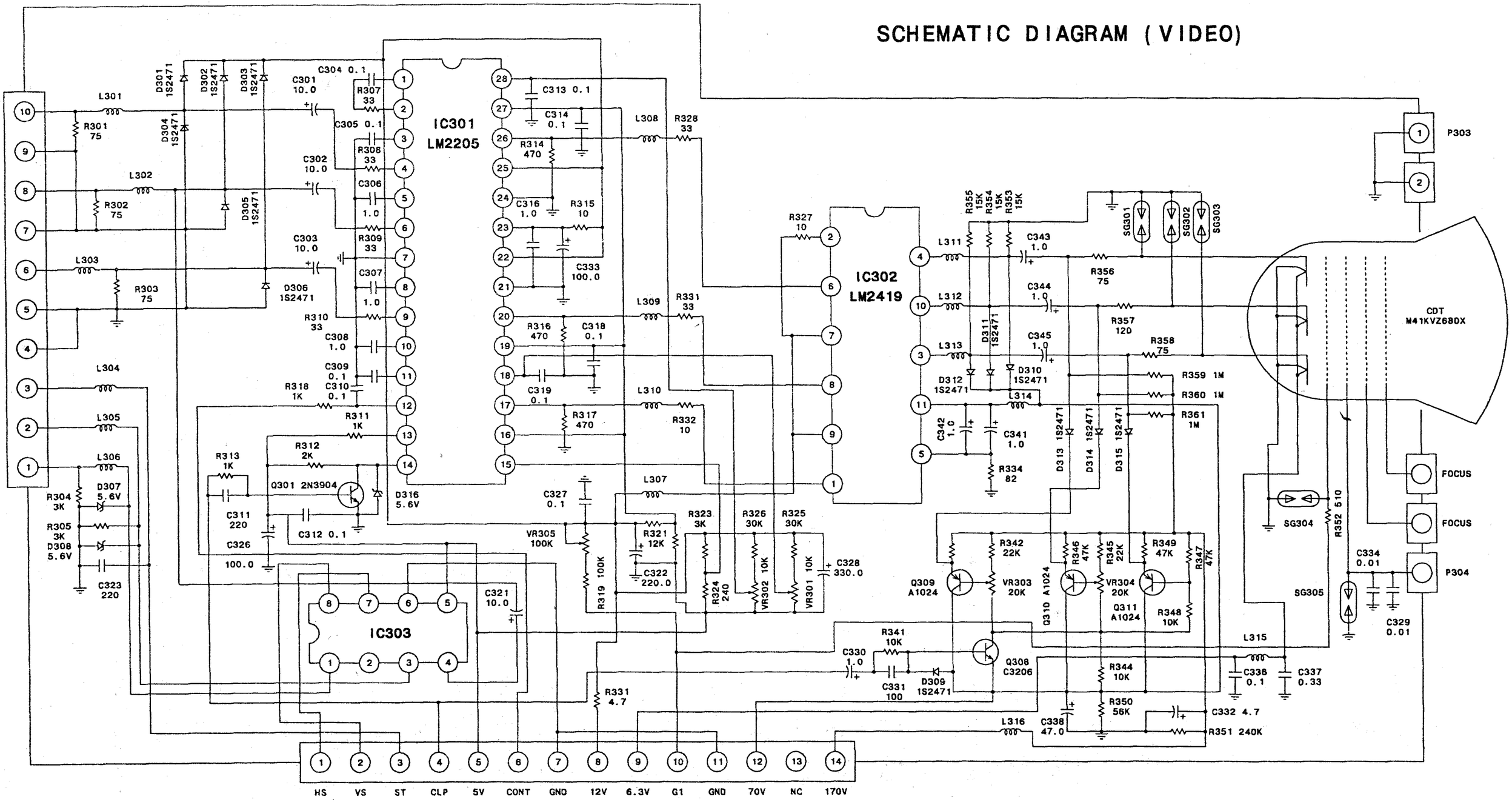
SCHEMATIC DIAGRAM (VIDEO)