AUDIO NAVIGATION SYSTEM

FZDA07ELEF2
FZDA07EREF2
FZDA07MRHF2
SERVICE MANUAL

KENWOOD

Kenwood Corporation

© 2007-8 CREATED IN JAPAN
B53-0559-00 (N) 0

SUBARU GENUINE

Model	Model Name	Parts No.
FZDA07ELEF2	FZDA07ELEF2	86271AG100
FZDA07EREF2	FZDA07EREF2	86271AG200
FZDA07MRHF2	FZDA07MRHF2	86271AG400

DC cord for service	E30-3801-15
ANT extension cord for service	E30-6255-05

FZDA07ELEF2

PANEL ASSY
(Y33-2872-72)

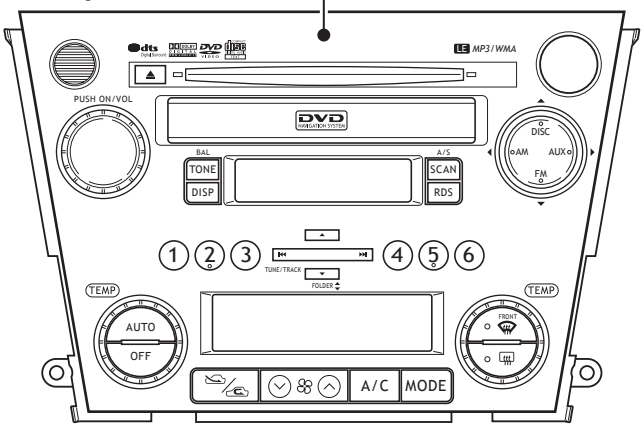

FZDA07MRHF2

PANEL ASSY
(Y33-2870-21)

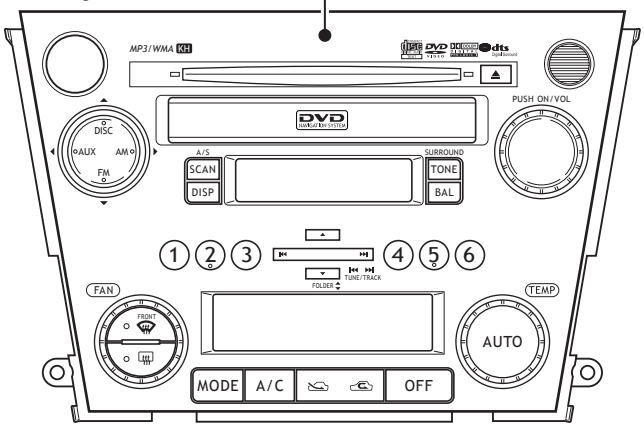

FZDA07EREF2

PANEL ASSY
(Y33-2872-71)

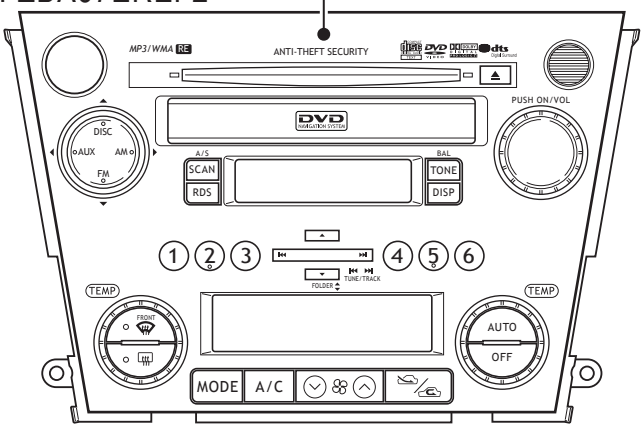

- The knobs with numbers larger than 700 on exploded view are not supplied for service parts because it is difficult to apply grease.
  Please change to panel assy when you need repair to the knob.
- The CN503 in the ELECTRIC UNIT (X34-485x-xx) is not a replaceable component.
  In case of defective of this IC, replace the entire unit (X34-485x-xx).
- The IC5, 9, IC21, and IC60 in the DVD unit (X37-1120-03) are not replaceable components.
  When these ICs are defective, replace the whole DVD mechanism assembly (X92-5910-01).
  You cannot replace only the board.
- The IC3, and IC11 in the DVD unit (X37-1100-00) are not replaceable components.
  When these ICs are defective, replace the whole DVD mechanism assembly (X92-5500-00).
  You cannot replace only the board.

This product uses Lead Free solder.
This product complies with the **RoHS** directive for the European market.

GEAR POSITION IN A DVD MECHANISM

In assembling the Traverse UD arm, Drive cam assembly, Drive gear 5 and Drive gear 4C, align register marks on these components.

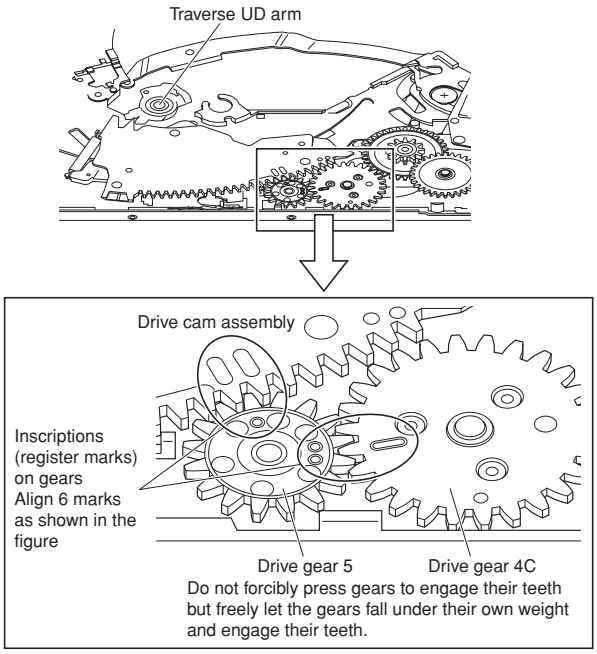

BLOCK DIAGRAM

DVS-8000V BLOCK DIAGRAM (X37-1100)

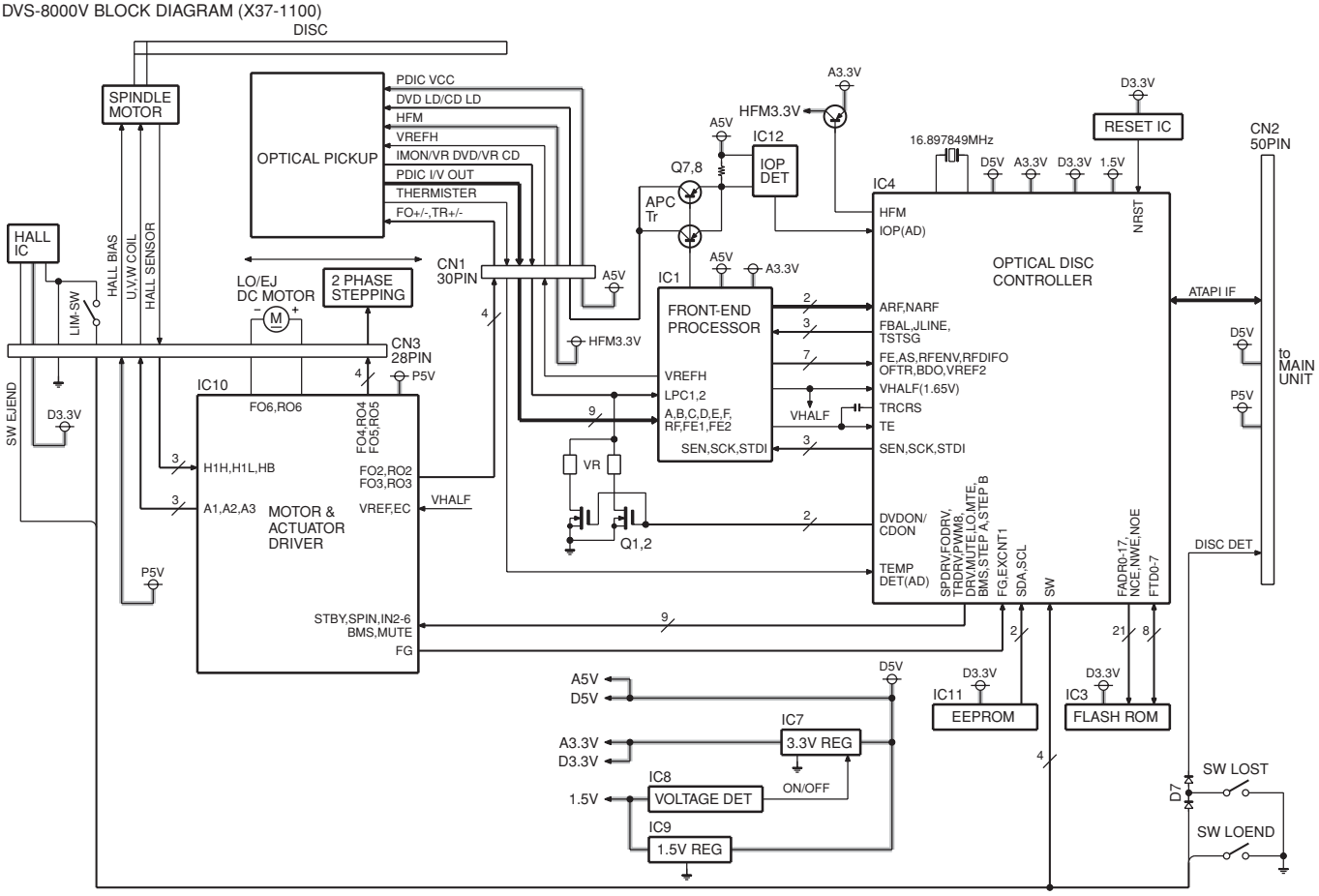

FZDA07ELEF2/EREF2/MRHF2

BLOCK DIAGRAM

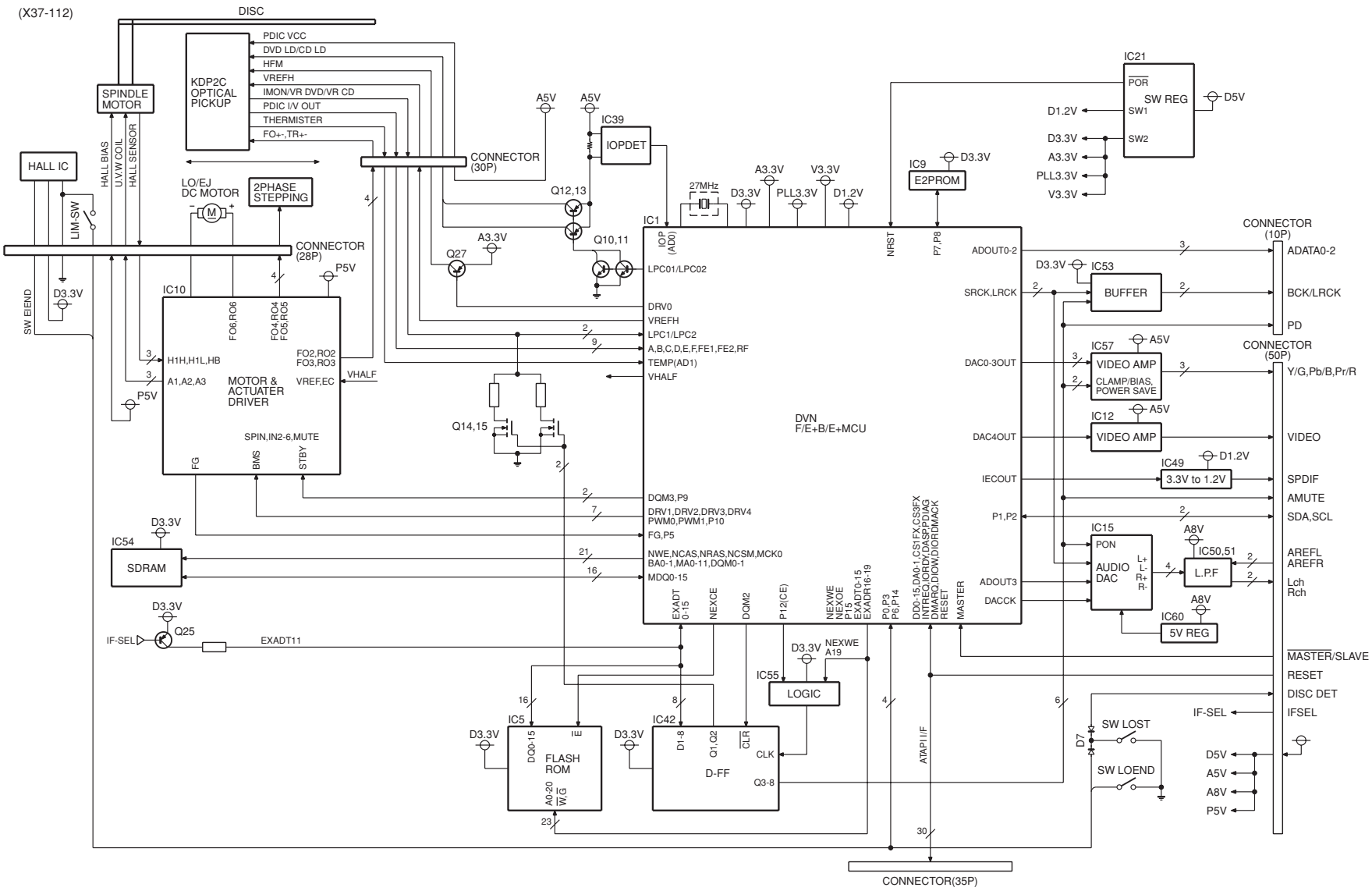

BLOCK DIAGRAM

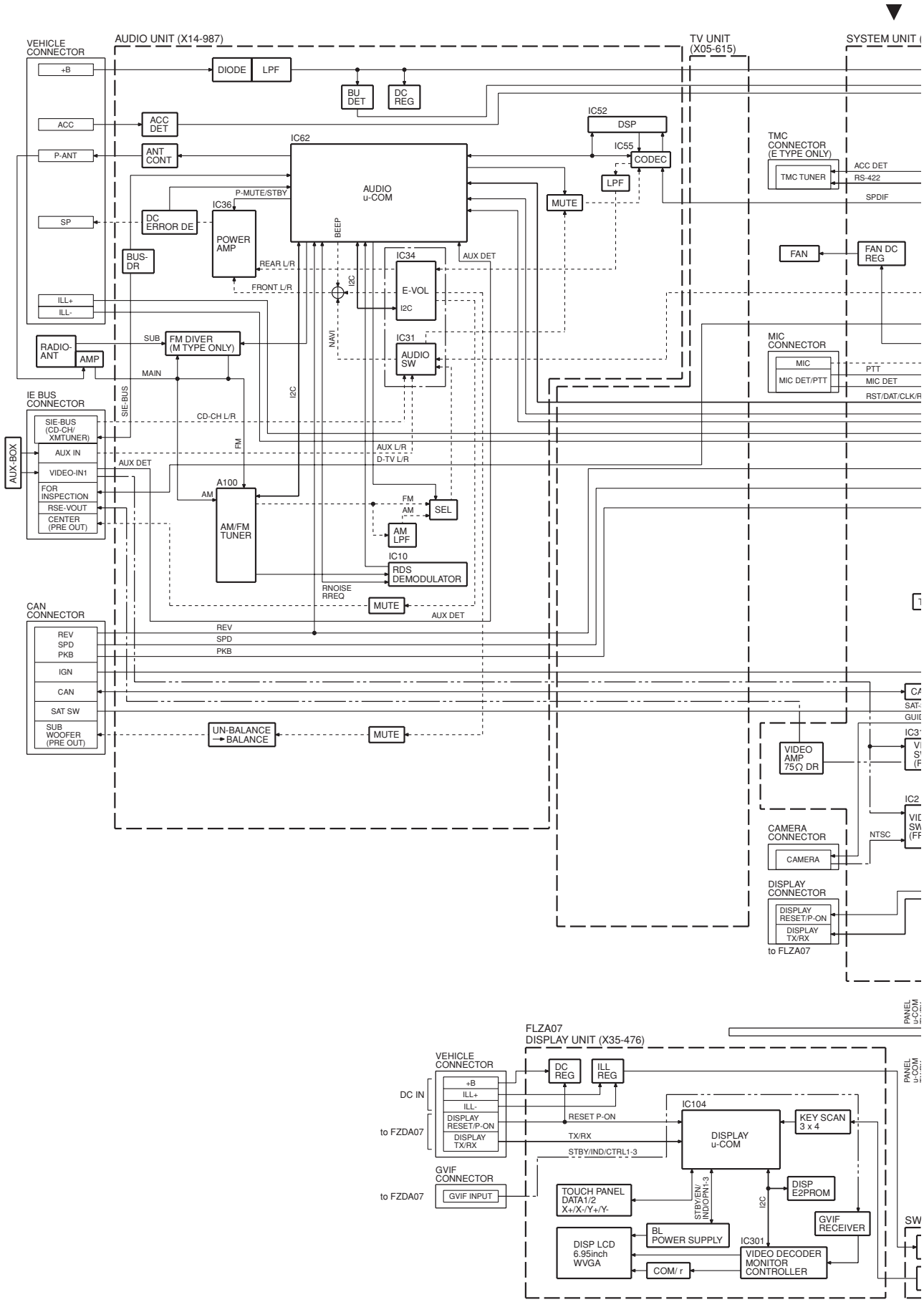

BLOCK DIAGRAM

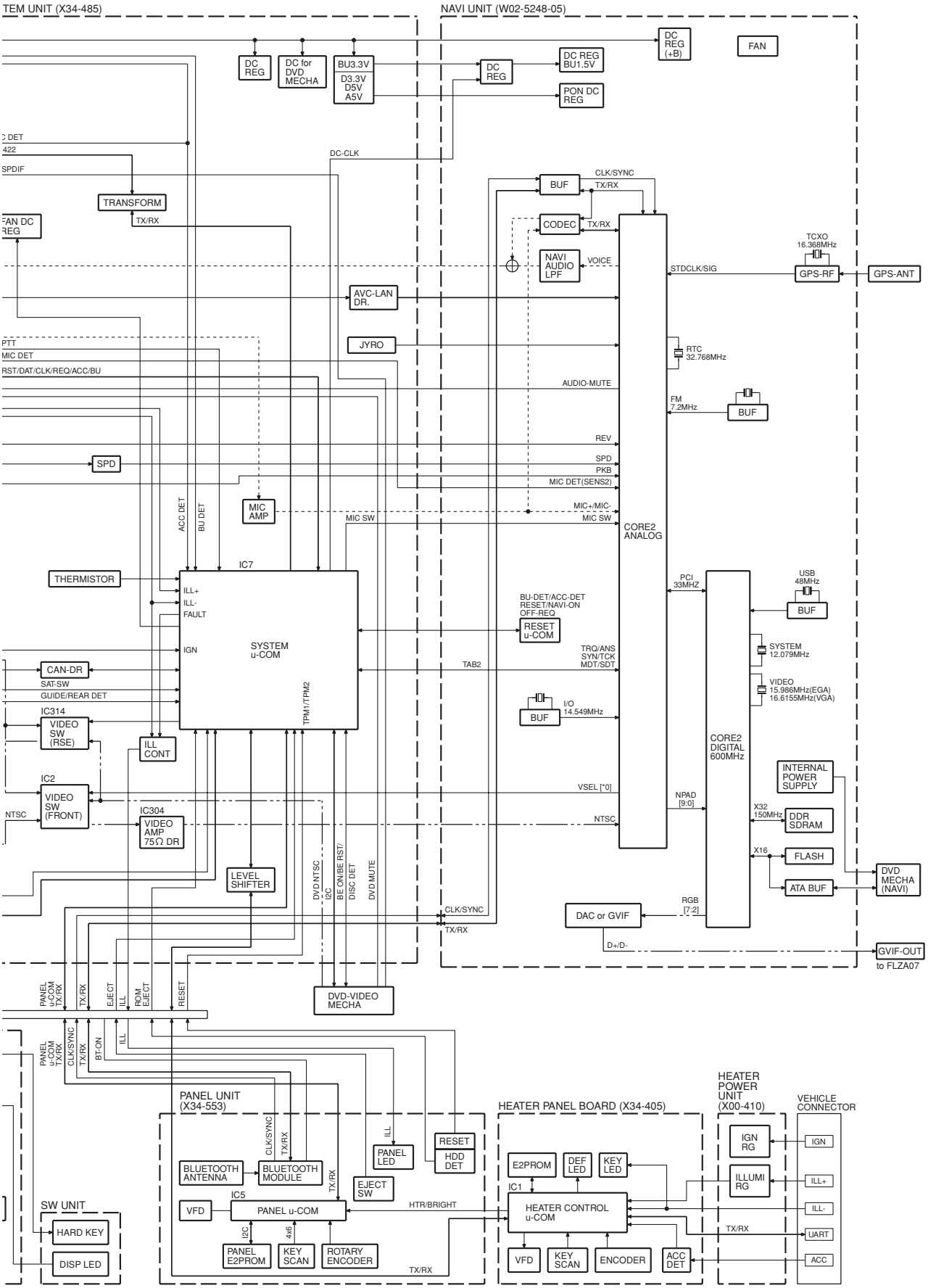

LEVEL DIAGRAM

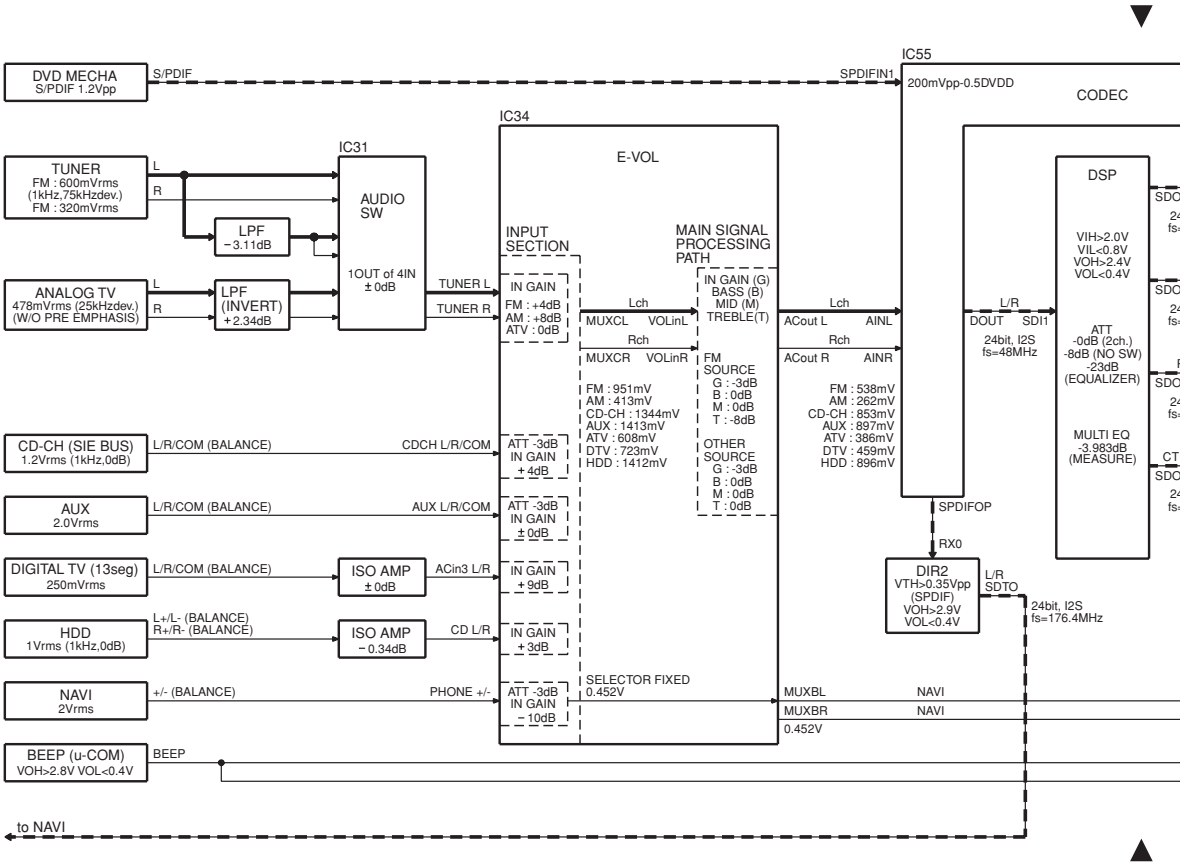

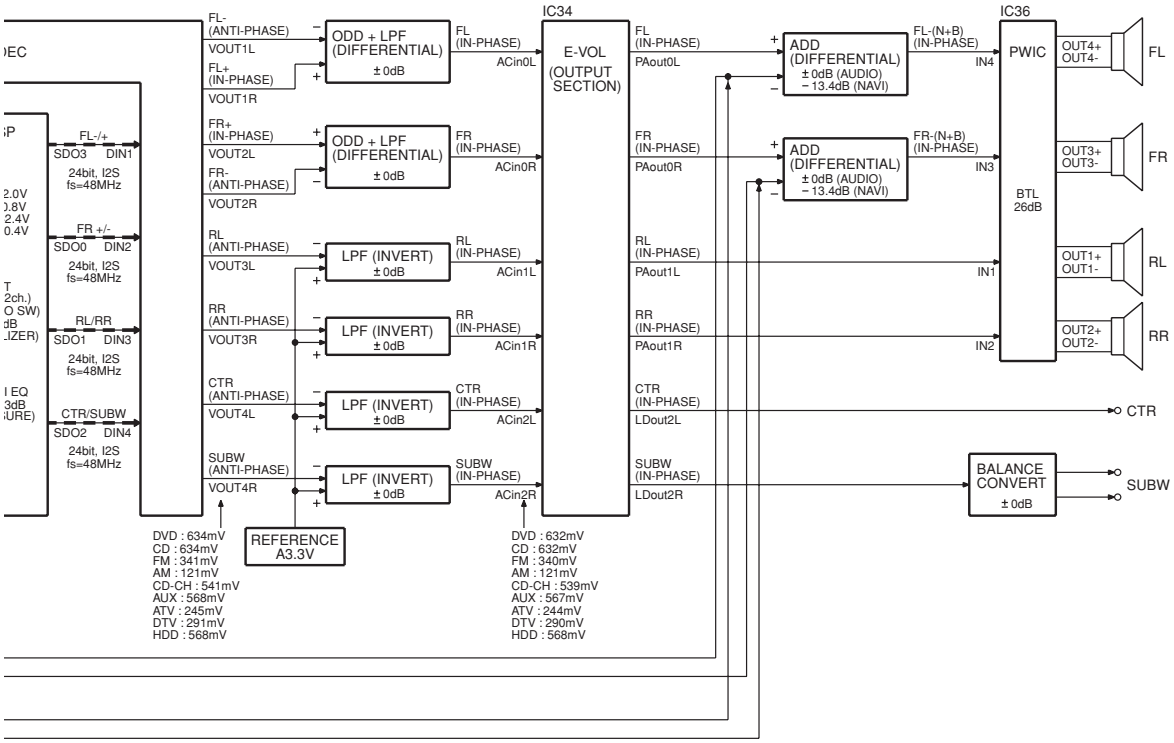

COMPONENTS DESCRIPTION

● POWER SUPPLY UNIT (X00-4100-00)

Ref. No.	Application / Function	Operation / Condition / Compatibility
Q31	Power supply for illumination LED	Stabilizes illumination LED voltage (8.1V) and supplies required current.
Q41	Power supply for IGN5V	Stabilizes IGN5V voltage (5.1V) and supplies required current.
Q51	Step-down DC/DC switching	Converts voltage by switching.
Q53	Power supply for VFD filament	Stabilizes VFD filament voltage (2.9V) and supplies required current.
Q54	Power supply for VFD filament	Configures Darlington with Q53.
Q55	Power supply SW for VFD filament	ON/OFF filament power supply by µ-com FL_FIL_ON signal. (ON with µ-com L output)
Q61	Power supply for DC/DC converter	Stabilizes DC/DC input voltage (9.5V) and supplies required current.
Q62	Power supply for DC/DC converter	Configures Darlington with Q61.
Q71	Step-up DC/DC timing control	Controls step-up DC/DC switching.
Q72	Step-up DC/DC switching	Converts voltage by switching.
Q73	Step-up DC/DC output voltage switching	Detects output voltage and controls switching timing.

● TUNER UNIT (X05-6150-62)

Ref. No.	Application / Function	Operation / Condition / Compatibility
Q1,2	TILT Power supply SW	ON/OFF of TILT power supply

● SYNTHESIZER UNIT (X14-987x-xx)

Ref. No.	Application / Function	Operation / Condition / Compatibility
IC1	Bu3.3V power supply IC	Input: BU 8V, Output when +B on
IC2	Analog 5V power supply IC for CODEC	Input: +B, Output when A_PON is H
IC3	3.3V power supply IC for CODEC	Input: Analog 5V for CODEC, Output when A_PON is H
IC4	8V power supply IC for radio	Input: +B, Output when A_PON is H
IC5	8V power supply IC for audio	Input: +B, Output when A_PON is H
IC6	1.25V power supply IC for DSP	Input: N_D 3.3V, Output when N_D 3.3V is being applied
IC7	3.3V power supply IC for DSP	Input: N_D 5V, Output when N_D 5V is being applied
IC10	RDS demodulation IC	Demodulation of RDS signal
IC11	FM diversity IC	Radio antenna MAIN/SUB switching
IC31	4-input audio switch	Switching between FM, AM and Analog TV
IC32	Midpoint potential output amplifier for audio	Midpoint potential (8V and 3.3V) output for sound quality
IC34	Audio control IC	Selector, BASS/MID/TRE, Mute, Electric volume
IC35	Adding circuit for NAVI audio signal	Mix NAVI audio signal in the front L/R ch
IC36	Power amplifier IC	4-channel BTL amplifier integrated power IC (Gain=26dB)
IC37	DAC output ODD circuit (For front channel)	Convert CODEC balance output to the single end output (Second order LPF)
IC38	DAC output Low Pass Filter (For rear channel)	Second order LPF
IC39	DAC output Low Pass Filter (For center/SW)	Second order LPF
IC40	For SUBW audio signal balance transfer	SUBW signal single end input → Balance output conversion
IC52	DSP	Acoustic field control
IC55	CODEC	Combination IC for DIR, ADC (2ch), and DAC (8ch)
IC62	µ-com IC for audio	System control of audio board
IC63	Reset IC	System reset detection (2.9V)

COMPONENTS DESCRIPTION

Ref. No.	Application / Function	Operation / Condition / Compatibility
IC64	IE-BUS interface driver/receiver	Sie-BUS communication interface
IC65	Reset logic IC	OR logic of power reduction, system µ-com reset request and flash writer reset request
IC66	Level shift logic IC	Level-shifting (3.3V → 5V)
	For hardware mute	OR logic of reset and momentary power down detection
IC67	Flash writing SW	Transfer the data from the writer when the µ-com FLMD0_CNT is L
Q1	Transistor for controlling the external radio ANT power supply	ON when ACC_ON
Q2	Transistor for driving the external radio ANT power supply	Output P-ANT power supply
Q3	Transistor for driving the external radio ANT power supply	ON when Q1 is ON
Q4	Transistor for external radio ANT power supply shortage protection circuit	ON when Q9 and Q51 are turned on and when P-ANT output is shorted
Q5	Bu8V power supply transistor	Input: +B, Output BU8V power supply
Q6	Bu8V power supply transistor	On when +B is on
Q7	Bu5V power supply transistor	Input: +B, Output BU5V power supply
Q8	Bu5V power supply transistor	On when +B is on
Q9,10	Transistor for external radio ANT power supply shortage protection circuit	Turn ON to activate the protection circuit when system µ-com TUN_ANTC output is H
Q11	Transistor to control the system board power supply SW	ON when the system µ-com P_ON output is H
Q12	System board power supply SW	P_ON: ON when Q11 is ON while the output is H
Q13	Bu8V power supply transistor	Input: +B, Output BU8V power supply
Q14	Bu5V power supply transistor	Input: +B, Output BU5V power supply
Q16	Transistor for detecting abnormal voltage	Protection for the abnormal condition when the output from IC5 is exceeding 10V
Q17	Transistor for detecting abnormal voltage	Protection for the abnormal condition when the output from IC4 is exceeding 10V
Q50	Mid-point circuit power supply SW	ON when A_PON
Q51,52	Transistor for external radio ANT power supply shortage protection circuit	Is turned On and activates the protection circuit when the system µ-com P_ON
Q53	Digital transistor for BU5V switch	ON when µ-com A_PON
Q54	Transistor for BU3.3V switch	ON when µ-com A_PON
Q55	Digital transistor for BU5V switch control	ON when µ-com A_PON
Q56	Digital transistor for BU3.3V switch control	ON when µ-com A_PON
Q57	Transistor for BU detection	Output L when the BU voltage is 9.8V or more
Q58	Digital transistor for over voltage detection	Detect the over voltage when the BU voltage is 19.6V or more
Q59	ACC detection transistor	Output L when the ACC voltage is 9.8V or more
Q60	Control 1/2 Vcc and distributor power supply circuits	Detect APON5V and turn ON 1/2 Vcc circuit and distributor
Q100	FET for FM diversity IC input S meter switch	OFF when AM
Q101	Digital transistor for AM power supply switch	ON when AM
Q102	Digital transistor for IF counter detection	L: When station is found, H: When station is not found
Q104	Digital transistor for FM diversity IC power supply switch control	ON when AM
Q106	Digital transistor for AM power supply switch control	ON when AM
Q108	Digital transistor for FM diversity IC power supply switch	OFF when AM

COMPONENTS DESCRIPTION

Ref. No.	Application / Function	Operation / Condition / Compatibility
Q109	Digital transistor for FM diversity IC main antenna fixture	Fix the main antenna when the µ-com TUN_DIVER is Hi
Q301,302	DC offset detection transistor	Detect DC offset in SP output line
Q303	DC offset temperature compensation transistor	Offset the fluctuation of output voltage from the detection circuit caused by temperature characteristics of Q301 and Q302
Q304,305	Digital transistor for PWIC standby control	On when the standby cancel is requested from the µ-com
Q306	Digital transistor for PWIC mute control	On when the mute cancel is requested from the µ-com
Q307	Transistor to control EVOL output mute	ON when the mute is requested from the Sie-BUS
Q308	Transistor to control EVOL output mute	On when the mute is requested from the µ-com
Q309	Digital transistor to drive the center speaker / subwoofer mute	On when the mute is requested from Momentary power down, Reset, Mute request from Sie-BUS or DIR error
Q310	Transistor to mute the center speaker output	On (Mute is activated) when the mute is requested from Momentary power down, Reset, Mute request from Sie-BUS, DIR error, or µ-com CENTER_MUTE_H
Q311	Transistor to mute the subwoofer output	On (Mute is activated) when the mute is requested from Momentary power down, Reset, Mute request from Sie-BUS, DIR error, or the µ-com SUBW_MUTE_H
Q312,313	Digital transistor to drive the subwoofer mute	On when the mute is requested from the µ-com
Q314	Digital transistor to drive the center speaker / subwoofer mute	ON when the mute is requested from Momentary power down or Reset
Q315	Transistor for CODEC (ADC input) mute control	ON when the µ-com ADC_MUTE_H
Q316	Transistor for PWIC mute control	ON (hard mute) when the mute is requested from Momentary power down or Reset
Q317	Digital transistor for PWIC mute control	ON when the mute is requested from Momentary power down or Reset
Q318	Digital transistor for PWIC mute control	On when the mute cancel is requested from the µ-com
Q319	Digital transistor for NAVI audio mute control	ON in other case than NAVI interrupt
Q320,321	Digital transistor to drive the center mute	On when the mute is requested from the µ-com
Q500	Digital transistor to detect the CODEC (DIR section) error	On when DIR error
Q501,502	Transistor for CODEC (ADC input) mute	ON (Mute is activated) when the µ-com ADC_MUTE_H
Q503	Transistor for CODEC (ADC input) mute control	ON when the µ-com ADC_MUTE_H
Q601	Transistor for reverse detection reverse buffer	Detect the reverse and reverse-output 3.3V
Q602	Digital transistor for Sie-BUS communication request	ON when the communication is requested from this unit to the vehicle (Unit → Vehicle)
Q603	Digital transistor for Sie-BUS communication termination request	ON when the communication termination is requested from this unit to the vehicle (Unit → Vehicle)
Q604	Digital transistor for Sie-BUS communication request	On when communication is requested from vehicle to this unit (Vehicle → Unit)
Q605	Digital transistor for Sie-BUS communication termination request	On when communication termination is requested from vehicle to this unit (Vehicle → Unit)
Q606	Digital transistor for BUDET logic reverse	OFF (output L) when momentary power down
Q607	Digital transistor for Sie-BUS reset communication drive	ON (output H) when reset
Q901	Digital transistor for subwoofer control switch control	ON when the µ-com SUB_CNT output H
Q902	Transistor for subwoofer control switch	ON when the µ-com SUB_CNT output H

COMPONENTS DESCRIPTION

● SWITCH UNIT (X34-405x-xx) (H/C)

Ref. No.	Application / Function	Operation / Condition / Compatibility
IC1	Heater control panel µ-com	Vehicle ECU, communication with audio-side µ-com, key import, display data transmission, illumination control
IC2	Reset IC	When µ-com power supply voltage is 4.2V or less, reset the µ-com.
IC3	E2PROM	Stores ROM correction data
Q1	UART+	Interface for UART communication (transmission) with vehicle.
Q2	UART-	Interface for UART communication (reception) with vehicle.
Q3	Power switch	ON/OFF VH voltage application of VFD.
Q4	Power switch	ON/OFF Q3 by taking IGN_DET and DD_ON logic.
Q5	ILL- signal detection	Transmit ILL- signal from vehicle to µ-com and Q13.
Q7	ACC voltage detection	Detects ACC voltage from the vehicle.
Q11	Illumination LED control switch	Controls ON/OFF and the luminance of LED for front DEF.
Q12	Illumination LED control switch	Controls ON/OFF and the luminance of LED for rear DEF.
Q13	Illumination LED control switch	Controls ON/OFF and the luminance of LED for key illumination.

● ELECTRIC UNIT (X34-485x-xx)

Ref. No.	Application / Function	Operation / Condition / Compatibility
IC2	Video switching SW for navigation	P-ON5V drive
IC4	CAN driver	P-ON5V drive for CAN-BUS communication with the vehicle
IC6	BUS driver for ETC communication (Only for J-type)	P-ON5V drive
IC7	System µ-com	Pins from #1~#47 and from #123~#144 are 5V-driven and pins from #48~#122 are 3.3V-driven
IC201	TV8V power supply IC	Input: SW_BU, Output when TV5V is ON
IC261	DVD_A5V power supply IC	Input: SW8V, Output when SW8V is being applied
IC281	N_A5V power supply IC	Input: SW8V, Output when SW8V is being applied
IC300	Amplifier for sound recognition microphone	P-ON8V drive
IC304	6dB video amplifier for navigation video and RSE video	75Ω drive, P-ON5V drive
IC305	BUS-driver for TMC communication	P-ON5V drive
IC307	Buffer for audio reference voltage	4V output, P-ON8V drive
IC310	BU5V power supply monitor	Output Lo (Reset) when BU5V is less than 4.3V
IC313	E2PROM (P-ON period of time, TILT correction value, number of DVD_EJECT)	1kbit, I2C-BUS, BU5V drive
IC314	Video switching SW for RSE output	P-ON5V drive
IC315	For SECURITY communication level conversion	P-ON3.3V drive
IC321	N_BU3.3V power supply IC	Input: N_BTT, Output when N_BTT is being applied
IC361	REAR6V power supply IC	Input: SW8V, Output when SW8V is being applied
IC501	P-ON5V and P-ON3.3V generation switching regulator	(250k~550kHz), 3.3V: 5A, 5V: 5A, BU drive
IC601	P-ON8V generation switching regulator	250kHz, 8V: 2.2A, BU drive
IC603	Buffer for DC/DC CLK and navigation CLK	P-ON3.3V drive
IC605	Watch dog monitor	Output Lo (Reset) when the smoothed voltage of the watch dog pulse is 2.5V or less
IC606	Buffer for SPDIF	P-ON3.3V drive

COMPONENTS DESCRIPTION

Ref. No.	Application / Function	Operation / Condition / Compatibility
IC611	Power supply IC for VFD	SW8V input, 16V output
IC612	Buffer power supply IC for SPDIF	ND3.3V input, 1.2V output
Q2	For LED9V power supply drive	ON when ILL+ is Hi and ILL- is Lo
Q3	Switch for ILL_DET-	ON when Q2 is ON
Q6	For IGN detection	ON when Hi input, open collector
Q8	For navigation RST	ON when Hi input (RST)
Q9,10	For watch dog drive	OFF when the watch dog pulse is stopped
Q341	For FAN10.5V power supply drive	ON when P-ON is Hi
Q342	Transistor for FAN10.5V power supply	Input: SW_BU, Output FAN10.5V power supply
Q343	Transistor for FAN10.5V power supply	ON when Q341 is ON
Q344	For FAN10.5V power supply shortage protection circuit	Q608 ON, ON when FAN10.5V output shortage
Q451	For LED9V power supply drive	On when Q2 is ON or when FAULT is Hi
Q452,453	Transistor for LED9V power supply	Input: N_BTT, Output LED9V power supply
Q454	Transistor for LED9V power supply	ON when Q451 is ON
Q501	FET for P-ON5 switching regulator (Two FETs)	
Q502	FET for P-ON3.3 switching regulator (Two FETs)	
Q504	For N_D3.3V output over voltage protection	On when N_D3.3V output is over voltage
Q505	For N_D5V output over voltage protection	On when N_D5V output is over voltage
Q601	P-ON2 SW (For P-ON8V)	SW of Q602
Q602	P-ON2 SW (For P-ON8V)	Turn ON P-ON8V
Q603	Transistor for P-ON8V switching	
Q604	FET for P-ON8V switching	
Q605	For SW8V output over voltage protection	On when SW8V output is over voltage
Q606	Switch for ILL_DET+	On when ILL+ is Hi
Q607	For FAN10.5V power supply shortage protection circuit	On when PON_FAN is Hi
Q608	For FAN10.5V power supply shortage protection circuit	ON when Q607 is ON
Q609	For video µ-com RST	
Q610	For stopping the watch dog function (while writing software)	ON while writing software
Q611	For stopping the watch dog function (while resetting)	ON while resetting
Q615	SW for parking	PKG: Low ON
Q616	SW for vehicle speed sensor	SPD: Low ON
Q617	SW for parking	PKG: Low ON
Q618	SW for vehicle speed sensor	SPD: Low ON
Q621	SW for reverse signal	REV: Hi ON
Q622	For V-MUTE	VMUTE: Hi ON (MUTE)
Q624	Reset SW for A07	SMRST: Hi, Reset: ON
Q626,627	SW for ND5V and ND3.3V	P-ON2: Hi OFF (P-ON)
Q628	SW for ND5V and ND3.3V	P-ON2: Hi ON
Q629	SW for reverse signal	REV: Hi ON
Q630	For LED9V power supply drive	ILLPWM: Hi ON or FULT: Hi ON
Q634	For rear camera power supply switching	REV: Hi ON
Q636	SW8VIC frequency switching	F0SC: Hi ON 340kHz, Low 248kHz

COMPONENTS DESCRIPTION

● SWITCH UNIT (X34-553x-xx)

Ref. No.	Application / Function	Operation / Condition / Compatibility
IC1	2KEEPROM, Retain µ-com setup conditions	N_D3.3V operation, Communicate with µ-com (IC5)
IC2	3.3V linear power supply, Used in BT module	N_D5V input, 3.3V output, Supplied to BT module (A1)
IC3	2.2V linear power supply, Used in VFD filament	N_D5V input, 2.2V output, Supplied to VFD filament (ED1)
IC4	Communication between µ-com and VFD (Level shift)	Level shift communication between µ-com (3.3V) and VFD(5V)
IC5	Panel control µ-com	N_D3.3V operation, SW, VOL input & VFD control processing (System µ-com)
Q1	ON/OFF control of VFD driver 16V power supply	Control the timing to terminate the start to protect VFD
Q2	Switching driver of VFD driver 16V power supply control	Driver to control Q1 with the µ-com
Q3	ON/OFF control of VFD logic 5V power supply	Control the timing to terminate the start to protect VFD
Q4	Switching driver of VFD logic 5V power supply control	Driver to control Q3 with the µ-com
Q5	Level shifter for communication between system µ-com and panel µ-com	Level shifter for communication between system µ-com (5V) and panel µ-com (3.3V)
Q8	BRIGHT signal level shifter for HTR communication	Communication level shifter between HTR (5V) and panel µ-com (3.3V)
Q10	HTR communication HTR signal level shifter	Communication level shifter between HTR (5V) and panel µ-com (3.3V)

● DVD UNIT (X37-1100-00)

Ref. No.	Application / Function	Operation / Condition / Compatibility
IC1	RF signal processing IC	RF signal processing
IC3	FLASH ROM	Maintain F/W for optical DISC control IC
IC4	Optical disc control IC in µ-com	Optical DISC general control / ATAPI interface
IC5	Voltage detection IC	For system resetting of optical DISC control IC
IC7	3.3V power supply	5V→3.3V
IC8	Voltage detection IC	For 1.5V power supply IC voltage monitor
IC9	1.5V power supply	5V→1.5V
IC10	Driver IC	Focus coil, Tracking coil, Spindle motor, Sled motor and Lo/Ej motor drive
IC11	EEPROM	Maintain data for optical DISC control IC
IC12	OP-AMP for Iop measurement	For IOP measurement
Q1	Register integrated transistor	SL. MUTE control
Q2	Register integrated transistor	For FG signal
Q3	Register integrated transistor	LO.MUTE control
Q4	Register integrated transistor	DRMU control
Q5	MOS-FET	Laser diode ON/OFF control for DVD
Q6	MOS-FET	Laser diode ON/OFF control for CD
Q12	Transistor for APC	Laser diode brightness control for CD
Q13	Transistor for APC	Laser diode brightness control for DVD
Q14	MOS-FET	For IOP measurement
Q15	Register integrated transistor	HFM ON/OFF control
Q16	Transistor for APC	For DVD laser diode protection (Current limit)
Q17	Transistor for APC	For CD laser diode protection (Current limit)
Q18,19	Register integrated transistor	3.3V power supply IC ON timing control

COMPONENTS DESCRIPTION

● DVD UNIT (X37-1120-02)

Ref. No.	Application / Function	Operation / Condition / Compatibility
IC1	One chip LSI for DVD player	RF signal processing / Servo processing / Decoding processing / AV decoding processing
IC5	FLASH ROM	To retain F/W for one chip LSI (Nonvolatile memory)
IC9	EEP ROM	To retain data for one chip LSI (Nonvolatile memory)
IC10	Driver IC	Fo coil / Tr coil / SP motor / SLD motor / LO-EJ motor drive
IC12	1ch video AMP	+6dB amplifier with internal composite video output filter
IC21	2-output switching REG	5V → 3.3V/1.2V
IC39	OP-AMP for Iop measurement	For Iop measurement
IC42	Logic IC for port extension	For port extension
IC49	Low voltage logic	For S/PDIF signal amplitude conversion (3.3V → 1.2V)
IC54	SDRAM	To retain data for one chip LSI (Nonvolatile memory)
IC55,56	Logic IC for port extension	For port extension
Q1	Transistor with internal resistor	LO_MUTE control
Q2	Transistor with internal resistor	For FG signal
Q3	Transistor with internal resistor	For BMS
Q4	Transistor with internal resistor	DRMUTE control
Q10	Front end transistor for APC	Control of CD laser diode emission
Q11	Front end transistor for APC	Control of DVD laser diode emission
Q12	Rear end transistor for APC	Control of CD laser diode emission
Q13	Rear end transistor for APC	Control of DVD laser diode emission
Q14	MOS-FET	ON/OFF control of CD laser diode
Q15	MOS-FET	ON/OFF control of DVD laser diode
Q20	MOS-FET for level shifter	Level shifter for I2C clock
Q21	MOS-FET for level shifter	Level shifter for I2C data
Q24	MOS-FET	For Iop measurement
Q25	Transistor with internal resistor	IFSEL control
Q27	Transistor with internal resistor	HFM ON/OFF control
Q28	Transistor for APC	For CD laser diode protection (Current limiter)
Q29	Transistor for APC	For DVD laser diode protection (Current limiter)

MICROCOMPUTER'S TERMINAL DESCRIPTION

● SYSTEM MICROCOMPUTER 30875FHAGP5Y0 (X34-485: IC7)

Pin No.	Pin Name	I/O	Application	Truth Value Table	Processing Operation Description
1	N.C. (TP_TX)	-	Not used		OPEN
2	ILL_DET+	I	ILL+ detection (small)		ILL ON: L
3	ILL_DET-	I	ILL- detection (pulse input)		H: ON, L: OFF, Pulse input Adjust luminance with duty ratio
4	IGN_DET	I	IGN detection		IGN ON: L, IGN OFF: H
5	SP_DATA_S	O	System μ-com → Panel μ-com data output		[A07 system] UART 19200bps (19330bps)
5	N.C.	-	Not used		[D07 system] OPEN
6	SP_DATA_P	I	Panel μ-com → System μ-com data output		[A07 system] UART 19200bps (19330bps)
6	N.C.	-	Not used		[D07 system] OPEN
7	N.C. (PAL_NT)	-	Not used (Reserved for discrimination between 50 and 60)		OPEN
8	SA_REQ_A	I	Audio μ-com → System μ-com transmission request input		
9	SA_REQ_S	O	System μ-com → Audio μ-com transmission request output		
10	A_RST	O	Reset to audio μ-com		H (Release): After the reset release initial setup
11	SA_ACC_S	O	ACC detection output to audio μ-com		H: Standby request
12	SA_BU_S	O	Reduced power detection output to audio μ-com		H: Momentary power down process request
13	PTT	I	PTT switch input		L: Key is pressed
14	WDP	O	Watch dog port		Self reset
15	BYTE	-	BUS width switching		Vss: In single chip mode
16	CNVSS	-	Processor mode setup		Vss: In single chip mode
17	XCIN	-	Not used		OPEN
18	XCOUT	-	Not used		OPEN
19	RESET	-	μ-com hard reset		RESET: L
20	XOUT	-	Main clock (10MHz crystal oscillator)		Multiplication with 3 (Internally 30MHz)
21	VSS	-			GND
22	XIN	-	Main clock (10MHz crystal oscillator)		Multiplication with 3 (Internally 30MHz)
23	VCC1	-			BU5V
24	NMI	I	Not used		Pull up through register
25	ACC_DET	I	ACC detection		ACC ON: L, ACC OFF: H
26	BU_DET	I	BU detection		L: BU ON, H: BU OFF (at momentary power down)
27	EJECT	I	Eject		[D07 system Oversea] Invalid when Acc is off [D07 system Domestic] Ejected by pressing and holding during OFF [A07 system] Forced ejection when Acc is off
28	CAN_EN	O	CAN transceiver enable output		H: Enable request
29	CAN_ERR	I	CAN transceiver ERROR input		H, L input, Error: L
30	CAN_IN	I	CAN transceiver DATA input		H, L input (125kbps)
31	CAN_OUT	O	CAN transceiver DATA output		H, L output (125kbps)
32	CAN_STB	O	CAN transceiver STANDBY output		L: Standby request
33	DC_DC_CLK	O	DC/DC clock output		385kHz/357kHz output
34	FAULT	O	FAULT indication		H: Key LED ON
35	DISC_DET	I	DVD mechanism DISC detection		L: DISC is found

MICROCOMPUTER'S TERMINAL DESCRIPTION

Pin No.	Pin Name	I/O	Application	Truth Value Table	Processing Operation Description
36	I2C_SCL	O	I2C clock output terminal		B/E communication
36	I2C_SCL	O	I2C clock output terminal		EEPROM communication
37	I2C_SDL	I/O	I2C data input/output terminal		B/E communication
37	I2C_SDL	I/O	I2C data input/output terminal		EEPROM communication
38	YBK_TXD	O	PC tool (YAMABIKO) communication / Flash writer TXD		
39	VCC1	-			BU5V
40	YBK_RXD	I	PC tool (YAMABIKO) communication / Flash writer RXD		
41	VSS	-			GND
42	YBK_CLK	O	PC tool (YAMABIKO) communication / Flash writer CLK		
43	YBK_MC_REQ	O	PC tool (YAMABIKO) communication / Flash writer BUSY		
44	TMC_TXD	O	Data output		[E destination] UART 19200bps (19330bps)
45	TMC_RXD	I	Data input		[E destination] UART 19200bps (19330bps)
46	NC (TMC_DET)	-	Not used		OPEN
47	YBK_SC_REQ	I	PC tool (YAMABIKO) communication		
48	N.C.	-	Not used		OPEN
49	TAB2_TCK	I	TAB2 communication clock		
50	TAB2_MDT	I	TAB2 receive data		
51	TAB2_SDT	O	TAB2 transmit data		
52	SP_RST	O	Reset to panel μ-com		[A07 system] L: Normal, H: Reset Immediately after reset, when communication reset occurs, RESET
52	N.C.	-	Not specified in Specification		[D07 system] OPEN
53	SP_BKUP	O	Power supply output to panel μ-com		[A07 system] H: ON
53	N.C.	-	Not specified in Specification		[D07 system] OPEN
54	EMP	I	Flash re-write mode terminal		Fixed to L (Connected to VSS)
55	DVD_RST	O	DVD mechanism reset terminal		
56	N.C.	O	Not used		OPEN
57	VSS	-			GND
58	N.C.	-	Not used		OPEN
59	VCC2	-			BU3.3V
60	HDD_DET	I	Lid detection		[Domestic] HDD rom
60	COVER_DET	I	Lid detection		[Oversea] DVD rom
61	N.C.	-	Not used		OPEN
62	R_SW_1	O	Rear monitor output switching 1	①	After PON, set to the video that is equivalent to the audio source
63	R_SW_2	O	Rear monitor output switching 2	①	After PON, set to the video that is equivalent to the audio source
64	R_SW_3	O	Rear monitor output switching 3	①	After PON, set to the video that is equivalent to the audio source
65	CE	I	Flash re-write mode terminal		Fixed to H (Connected to Vcc 2)
66	FAN_ON	O	FAN power supply SW		Same operations as PON2

MICROCOMPUTER'S TERMINAL DESCRIPTION

Pin No.	Pin Name	I/O	Application	Truth Value Table	Processing Operation Description
67	PON_FAN	O	FAN power supply shortage protection		FAN_ON: H in 100msec after Hi
68	PON_2	O	Peripheral power supply control		H: Power ON, L: OFF
69	PON_1	O	Power supply (+B SW)		DC/DC original power supply
70	V-MUTE	O	V-MUTE control for RSE		H: Mute, L: Mute cleared
71	(TYPE5)	I	Model information		
72	(TYPE4)	I	Model information		
73	TYPE3	I	Destination setting terminal 3	②	
74	VCC2	-			BU3.3V
75	TYPE2	I	Destination setting terminal 2	②	
76	VSS	-			GND
77	TYPE1	I	Destination setting terminal 1	②	
78	FOSC8V	O	8VDC/DC frequency switching SW		H: Only for European AM_LW, L: For others
79,80	N.C.	-	Not used		OPEN
81	MIC_DET	I	Voice recognition microphone connection detection		L: Connected
82~87	N.C.	-	Not used		OPEN
88	SH_DATA_H	I	HTR-C μ-com → System μ-com data output		[A07 system] UART 4800bps (4783bps)
88	N.C.	-	Not used		[D07 system] OPEN
89	N.C.	-	Not used		OPEN
90	SH_DATA_S	O	System μ-com → HTR-C μ-com data output		[A07 system] UART 4800bps (4783bps)
90	N.C.	-	Not used		[D07 system] OPEN
91	VCC2	-			BU3.3V
92	N.C.	-	Not used		OPEN
93	VSS	-			GND
94	N_CLK_ON	O	NAVI clock output SW		L: DCDCCLK OFF, H: DCDCCLK ON
95	NC	O	Not used		OPEN
96	NAV_RST	O	NAVI reset		RESET: H
97	NAV_BU_CON	O	NAVI backup control		H: Reduced power detection
98	NAV_ACC_CON	O	NAVI ACC control		ACC-ON: L
99	NAV_ON	O	NAVI power ON		ON: L
100	NAVI_OFF_REQ	I	SYS +B shutdown permission signal		L: OFF inhibited
101	N.C.	-	Not used		OPEN
102	SECURITY	I	GBOOKα security signal		[Valid only in domestic D system/A system]
102	N.C.	-	Not used		[D system/A system Oversea] OPEN
103	DC_ERR	-	Power supply error detection		Detection during PON1 ON
104	TAB2_SYN	I	TAB2 synchronization signal		
105	TAB_REQ	I	TAB2 transmission request		
106	TAB2_ANS	I	TAB2 answer signal		
107	SPACE	O	SPACE signal		[Destination to Japan] H: While playing back the music, L: Space between one music and another
107	N.C.	-	Not used		[Destination to oversea] OPEN
108	CAM_SW	I	Video switching of R-CAMERA (Pin reserved for the top view)		Not supported
109	TILT_SPD	O	Power supply control for TILT mechanism drive		H: Brake
110	N.C.	-	Not used		OPEN

MICROCOMPUTER'S TERMINAL DESCRIPTION

Pin No.	Pin Name	I/O	Application	Truth Value Table	Processing Operation Description
111	1SEG_RST	O	RESET of 1 SEG tuner		L: RESET
111	NC	-	Not used		[Other destination than J] OPEN
112	1.2V_ON	O	Power supply control for 1 SEG tuner		H: Power ON
112	NC	-	Not used		[Other destination than J] OPEN
113~115	N.C.	-	Not used		OPEN
116	SA_DATA_A	I	Audio → System μ-com data input		Communication between SYSTEM ↔ AUDIO
117	SA_CLK	O	Tx/Rx clock		Si/o 500kbps
118	SA_DATA_S	O	System μ-com → Audio data output		Communication between SYSTEM ↔ AUDIO
119	N.C.	-	Not used		OPEN
120	A_RST_IN	I	RESET input of AUDIO		L: RESET
121~124	N.C.	-	Not used		OPEN
125	REAR_DET	I	Rear camera connection input		H, L input, Connection: L
126	NC (REAR_GUIDE)	O	Rear camera setup input		H, L output
127	SM_RST	O	Reset to monitor μ-com		L: Normal, H: Reset, Immediately after reset, when communication reset occurs, RESET
128	SM_DATA_M	I	Monitor μ-com → System μ-com data output		UART 19200bps (19330bps)
129	SM_BKUP	O	Power supply output to the monitor μ-com		[A07 system] H: ON
129	N.C.	-	Not used		[D07 system] OPEN
130	VSS	-			GND
131	SM_DATA_S	O	System μ-com → Monitor μ-com data output		UART 19200bps (19330bps)
132	VCC1	-			BU5V
133	TILT_MODE	I	Panel angle detection		[D07 system]
133	C_PCB_DET	I	Capacitor board detection		[A07 system] 2.5V or more: Detection
134	T_PM1	O	Motor +		[D07 system] Normal rotation / Reverse rotation / Brake / Standby T_PM1: H / L / H / L T_PM2: L / H / H / L
134	N.C.	-	Not used		[A07 system] OPEN
135	T_PM2	O	Motor -		[D07 system] OPEN
135	N.C.	-	Not used		[A07 system] OPEN
136	REMOCON	I	Vehicle satellite switch input	③	Resistance dividing vehicle remote control
137	REMOCON2	I	Vehicle satellite switch input (For video control)	③	Resistance dividing vehicle remote control
138	BU_DET_AD	I	For voltage level detection		2ms period A/D detection
139	N.C.	-	Not used		OPEN
140	AVSS	-	A/D power supply		GND
141	TEMP_HOT	I	Temperature sensor input		2ms period A/D detection
142	VREF	-	A/D reference voltage		BU5V
143	AVCC	-	A/D power supply		BU5V
144	N.C. (TP_RX)	O	Not used		OPEN

MICROCOMPUTER'S TERMINAL DESCRIPTION

Truth Value Table

① VIDEO_SW logic for RSE

VIDEO_SW to be adopted: BA7649F (Manufactured by ROHM)

Video selection control signal			CORE2 input video		
R_SW1	R_SW2	R_SW3	JP	EU/US/AUS	← SYSTEM μ-com terminal name
CTL-A	CTL-B	CTL-C			← VIDEO_SW IC terminal name
L	L	don't care	TV	No setting	
L	H	don't care	VIDEO-IN	VIDEO-IN	
H	L	don't care	DVD	DVD	
H	H	don't care	(1seg)	No setting	
*	*	H	DTV-IN	(MUTE)	

"*": Can use any one of Lo or Hi

② Setup of destination

TYPE 1 (77Pin)	TYPE 2 (75Pin)	TYPE 3 (73Pin)	Type of vehicle	Destination
Information on the type of vehicles	Destination information			
L	L	L	D07	Japan
L	L	H		Europe
L	H	L		North America
L	H	H		Australia
H	L	L	A07	Japan
H	L	H		Europe (Right side steering wheel)
H	H	L		Europe (Left side steering wheel)
H	H	H		Australia

③ Satellite SW voltage specification

1) Rated voltage: 5V

2) Rated voltage: See the next table

3) Chattering period of time: 10ms or less

• Take the fluctuation in power supply voltage into account (4.75V~5.25V).

4) Range of output voltage

$V2=V1Ra/(Rp+Ra)$ $\quad Ra=R1+(1/((1/R8)+(1/R2+\ldots+R7)))$

$=R1+R8(R2+\ldots+R7)/(R2+\ldots R8)$

• Resistance of SRC: MAX 1.0Ω

• Resistance of BHD harness wire: MAX 0.2Ω

• Take the fluctuation in voltage into account (4.75V~5.25V).

• Calculate the range taking the tolerance in resister (±2%) into account to allow the margin in voltage determination

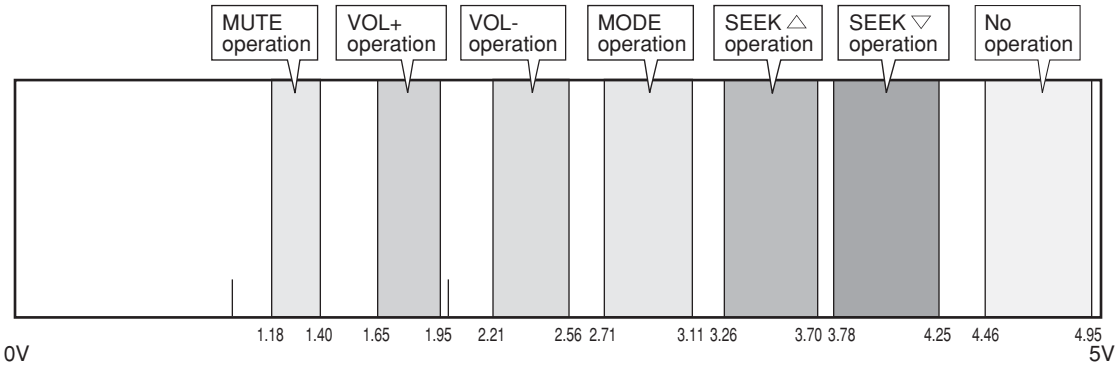

MICROCOMPUTER'S TERMINAL DESCRIPTION

● AUDIO MICROCOMPUTER 70F3334GC5Y1 (X14-987: IC62)

Pin No.	Pin Name	I/O	Application	Truth Value Table	Processing Operation Description
1	AVREF0		Power supply terminal		BU3.3V connection
2	AVSS		GND terminal		GND connection
3	ADC_RST→NC	O	ADC reset control → Unused pin		Output is fixed to L, Terminal OPEN
4	RDS_AFS	O	Time constant control in NOISE circuit during AFS (Other country than Japan)		L: During AF search H: In other case than the above (Normal case)
4	NC	O	Not used (Japan)		Output is fixed to L, Terminal OPEN
5	AVREF1		Power supply terminal		BU3.3V connection
6	CODEC_CSB	O	CODEC chip select control		L: Selected, H: Unselected
7	FLMD0_CNT	O	Control FLMD0 at pin 8 while re-writing the program		H: During re-writing DISC L: Output is normally fixed to L
8	FLASH_FLMD0		μ-com mode switching terminal * FLASH re-writing terminal	②	H: When re-writing L: Normally
9	VDD		Power supply terminal		BU3.3V connection
10	REGC		For regulator stabilization		4.7μF connection
11	VSS		GND terminal		GND connection
12	X1		Oscillation input		3.932160MHz
13	X2		Oscillation output		3.932160MHz
14	RESET	I	μ-com reset Reset control from system μ-com * Set to H while ACC OFF Reset control from the writing writer * Write while ACC OFF (plan)	③	L: Reset H: Reset is cleared
15	XT1		Not used		Not used, GND connection
16	XT2		Not used		Not used, Open
17	ON_REQ	I	ON request from Sie-BUS * Not used in the simplified Sie-BUS		L: System ON request H: Not requested
18	OFF_REQ	I	OFF request from Sie-BUS * Not used in the simplified Sie-BUS		L: System OFF request H: Not requested
19	RDS_CLK	I	RDS clock input (Other country than Japan) Interruption with noise removal		Normal input
19	NC	O	Not used (Japan)		Output is fixed to L, Terminal OPEN
20	CODEC_ERR	I	CODEC error detection		H: Error, L: Normally, Turn on MUTE in the rear stage within 5ms after detecting the error * Because the IC error sustained period of time is 5ms
21	DIR2_ERR	I	DIR2 error detection (Japan/HDD ripping)		H: Error, L: Normally
21	NC	O	Not used (Other country than Japan)		Output is fixed to L, Terminal OPEN
22	FLASH_SI	I	SIO_0 or SIO_3		H or L: Writing in, L: Output is normally fixed to L
23	FLASH_SO	O	SIO_0 or SIO_3		H or L: Writing in, L: Output is normally fixed to L
24	FLASH_CLK	I	SIO_0 or SIO_3		H or L: Writing in, L: Output is normally fixed to L
25	RDS_TXD	O	For debugging 9588bps		H: When debugging no communication, Communication speed is 9588bps, L: Output is normally fixed to L
25	NC	O	Not used		Output is fixed to L, Terminal OPEN

MICROCOMPUTER'S TERMINAL DESCRIPTION

Pin No.	Pin Name	I/O	Application	Truth Value Table	Processing Operation Description
26	RDS_RXD	I	For debugging 9588bps		H: When debugging no communication, Communication speed is 9588bps, L: Output is normally fixed to L
26	NC	O	Not used		Output is fixed to L, Terminal OPEN
27	BEEP	O	BEEP output		3kHz BEEP output (pulse), L: During no operation
28	DIR2_CS	O	DIR2 chip select control (Japan/HDD ripping) * Shared with RDS_MUTE		L: Selected H: Unselected
28	RDS_MUTE	O	MUTE circuit control during AFS Connected to MUTE C of E_VOL (Other country than Japan) * Presently, it is an independent control Shared with DIR2_CS		Nch open drain control L: During MUTE operation Hi-Z: When MUTE is cleared
29	DIR2_RST	O	DIR2 reset control (Japan/HDD ripping)		L: Reset, H: Reset is cleared
29	NC	O	Not used (Other country than Japan)		Output is fixed to L, Terminal OPEN
30	NC	O	Not used		Output is fixed to L, Terminal OPEN
31	BUS_DO	O	Sie-BUS data output		H: During no communication, Communication speed is about 17kHz
32	BUS_DI	I	Sie-BUS data input		Input (H): During no communication, Communication speed is about 17kHz
33	EVSS		GND terminal		GND connection
34	EVDD		Power supply terminal		BU3.3V connection
35	TUN_SDA	I/O	TUNER communication data		H (Hi-z): During no communication, Communication speed is 328kHz
36	TUN_SCL	I/O	TUNER communication clock		H (Hi-z): During no communication, Communication speed is 328kHz
37	SYS_ON	O	ON request to Sie-BUS		L: System ON request, H (Hi-z): Not requested
38	SYS_OFF	O	OFF request to Sie-BUS * Not used in the simplified Sie-BUS		L: When system OFF is requested H (Hi-z): Not requested
39	TUN_IF	I	Detection of station in the TUNER		L: When station is found , H: When station is not found
40	DSP_SI	I	DSP data input		H: During no communication, Communication speed is variable, During boot-up: 1.97MHz, Normal condition: 3.93MHz
41	DSP_SO	O	DSP data output		Input (H): During no communication, Communication speed is variable, During boot-up: 1.97MHz, Normal condition: 3.93MHz
42	DSP_SCL	O	DSP clock output		H: During no communication, Communication speed is variable, During boot-up: 1.97MHz, Normal condition: 3.93MHz
43	EVOL_SDA	I/O	I2C communication data of EVOL (To the entire destination) Shared with TV_SDA		H (Hi-z): During no communication, Communication speed is 328kHz
43	TV_SDA	I/O	I2C communication data of TV (Japan) Shared with EVOL_SDA		H (Hi-z): During no communication, Communication speed is 328kHz
44	EVOL_SCL	I/O	I2C communication clock of EVOL (To the entire destination) Shared with TV_SCL		H (Hi-z): During no communication, Communication speed is 328kHz

MICROCOMPUTER'S TERMINAL DESCRIPTION

Pin No.	Pin Name	I/O	Application	Truth Value Table	Processing Operation Description
44	TV_SCL	I/O	I2C communication clock of TV (Japan) Shared with EVOL_SCL		H (Hi-z): During no communication, Communication speed is 328kHz
45	TV_ST_DET	I	TV stereo detection		H: Stereo, L: Other than the above
45	NC	O	Not used (Other country than Japan)		Output is fixed to L, Terminal OPEN
46	TV_BL_DET	I	Detection of main/sub of TV (input)		H: Bilingual, L: Other than the above
46	NC	O	Not used (Other country than Japan)		Output is fixed to L, Terminal OPEN
47	TV_SD	I	Detection of station in TV		H: TV signal is found, L: TV signal is not found
47	NC	O	Not used (Other country than Japan)		Output is fixed to L, Terminal OPEN
48	TV_SYNC_DET	I	Detection of TV receive synchronization		H: Synchronized, L: Not synchronized
48	NC	O	Not used (Other country than Japan)		Output is fixed to L, Terminal OPEN
49	TV_ANT_DET	I	Detection of TV source connection (Source can be or cannot be selected depending on if there is TV antenna or not)		H: One or more antenna is connected L: Any one of 4 antennas is not connected
49	NC	O	Not used (Other country than Japan)		Output is fixed to L, Terminal OPEN
50	CODEC_DI	I	CODEC serial data input * Shared with DIR2_DI		Input (H): During no communication, Communication speed is 3.93MHz
50	DIR2_DI	I	DIR2 serial data input (Japan/HDD ripping) Pin shared with DIR1		Input (H): During no communication, Communication speed is 3.93MHz
51	CODEC_DO	O	CODEC serial data output * Shared with DIR2_DO		H: During no communication, Communication speed is 3.93MHz
51	DIR2_DO	O	DIR2 serial data output (Japan/HDD ripping) Pin shared with DIR1		H: During no communication, Communication speed is 3.93MHz
52	CODEC_SCLK	O	CODEC serial clock * Shared with DIR2_CLK		H: During no communication, Communication speed is 3.93MHz
52	DIR2_CLK	O	DIR2 serial clock (Japan/HDD ripping) Pin shared with DIR1		H: During no communication, Communication speed is 3.93MHz
53	SA_DATA_S	I	Data input from system µ-com		Input (H): During no communication, Communication speed is about 500kHz
54	SA_DATA_A	O	Data output to system µ-com		H: During no communication, Communication speed is about 500kHz
55	SA_CLK	I	CLK input from system µ-com		Input (H): During no communication, Communication speed is about 500kHz
56	SA_BU_S	I	Momentary power down notification from system µ-com		H: When the momentary power down is detected, L: Normally
57	SA_ACC_S	I	ACC notification from system µ-com		L: ACC-ON, H: ACC-OFF
58	SA_REQ_S	I	REQ request from system µ-com		H: When there is a request, L: Normally fixed to L
59	TV_ON	O	TV power supply control (Japan)		H: TV power ON, L: TV power OFF
59	NC	O	Not used (Other country than Japan)		Output is fixed to L, Terminal OPEN
60	TV_MAIN_SUB	O	TV main/sub control (Output) (Japan)		H: Main voice, L: Sub voice, H: For other broadcasting than the bilingual broadcasting, Don't care: When other source is used
60	NC	O	Not used (Other country than Japan)		Output is fixed to L, Terminal OPEN
61	TYPE2	I	Destination information	①	Refer to the True Value Table for the details
62	TYPE3	I	Destination information	①	Refer to the True Value Table for the details
63	TUN_ANTC	O	Radio antenna control (ON/OFF of protection circuit)		H (Protection ON): ACC ON, L: Other

MICROCOMPUTER'S TERMINAL DESCRIPTION

Pin No.	Pin Name	I/O	Application	Truth Value Table	Processing Operation Description
64	FMM_SW	O	VICS signal switching RF signal switching (RADIO pack or TV pack)	④	H: VICS-Radio, RF-TV L: VICS-TV, RF-Radio
64	NC	O	Not used		Output is fixed to L, Terminal OPEN
65	TUN_AM_PON	O	AM power supply control		H: For AM, L: Other
66	TUN_DIVER	O	Diversity switching (Japan and Australia)		ON/OFF switching in the test mode, L (Initial): ON, H: OFF, L (ON): In normal mode (J/M type only)
66	NC	O	Not used (Other country than Japan and Australia)		Output is fixed to L, Terminal OPEN
67	NC	O	Not used		Output is fixed to L, Terminal OPEN
68	SA_REQ_A	O	REQ notification to system µ-com		H: When there is a request, L: Normally
69	BVSS		GND terminal		GND connection
70	BVDD		Power supply terminal		BU3.3V connection
71	P_STBY	O	POWER IC standby control		L: During standby, H: When the standby is cleared
72	CAR_DET	I	Vehicle identification information		L: D07 (IMPREZA), H: FORESTER
73	P_MUTE	O	POWER IC mute		L: During MUTE operation H: When the mute is cleared
74	A_P_ON	O	Power supply control of AUDIO board		H: Power ON, L: Power OFF
75	TYPE1	I	Destination information	①	Refer to the True Value Table for the details
76	FLASH_FLMD1		µ-com mode switching terminal * FLASH re-writing terminal	②	Refer to the True Value Table for the details
77	AUX_DET	I	AUX connection detection		L: When AUX is detected (Can be detected after PON is stabilized)
78	REVERSE	I	Back gear detection * Allow one second for chattering There is 200Hz pulse input in the NAVI test mode This has to be processed in the µ-com side * This cannot be recognized as "Reverse" since there is the chattering process		L: Rolling backward H: Rolling forward
79	OFFDET	I	When AC signal or DC voltage in the Power_AMP output is outside of Window, set Lo in Power_AMP OFFDET output and detect		L: OFF_SET detection H: Normal
80	RDS_DATA	I	RDS data input (Other country than Japan)		Normal input
80	NC	O	Not used (Only in Japan)		Output is fixed to L, Terminal OPEN
81	RDS_QUAL	I	RDS receive status input (Other country than Japan)		Normal input
81	NC	O	Not used (Japan)		Output is fixed to L, Terminal OPEN
82	BUS_STBY	O	IE-BUS IC power supply control		H: System ON
83	AUDIO_SEL2	O	AUDIO selector 2	⑤	Refer to the True Value Table ⑤
84	AUDIO_SEL1	O	AUDIO selector 1	⑤	Refer to the True Value Table ⑤
85	NAVI_MUTE	O	NAVI audio mute		H: NAVI audio mute, L: When the mute is cleared
86	SUBW_MUTE	O	Subwoofer mute control		H: During MUTE operation L: When the mute is cleared
87	CENTER_MUTE	O	Center SP mute control		H: During MUTE operation L: When the mute is cleared
88	HDD_MUTE	I	MUTE request from HDD (NAVI) (Japan)		L: MUTE request

MICROCOMPUTER'S TERMINAL DESCRIPTION

Pin No.	Pin Name	I/O	Application	Truth Value Table	Processing Operation Description
88	NC	O	Not used (Other country than Japan)		Output is fixed to L, Terminal OPEN
89	BE_MUTE	I	MUTE request from the DVD		L: MUTE request
90	NC	O	Not used		Output is fixed to L, Terminal OPEN
91	SUB_CONT	O	Subwoofer ON/OFF control		H: When SubWoofer_ON, L: When SubWoofer_OFF
92	DSP_RST	O	DSP reset control		L: Reset, H: Reset is cleared
93	DSP_CS	O	DSP select control		L: Selected, H: Unselected
94	DAC_RST→NC	O	Not used		Output is fixed to L, Terminal OPEN
95	DAC_MUTE	O	DAC rear stage mute control (E-VOL MUTE0, 1)		H: During MUTE operation L: When the mute is cleared
96	ADC_MUTE	O	ADC front stage mute control		H: During MUTE operation L: When the mute is cleared
97	TV_S_METER	I	TV signal meter		A/D input, It will be decided that the station is found when the meter shows 1.3V or more (This is a draft proposal)
97	NC	I	Not used (Other country than Japan)		A/D input
98	RDS_NOISE	I	RDS noise input (Other country than Japan)		A/D input, Each threshold is decided depending on the data in PACK
98	NC	I	Not used (Japan)		A/D input
99	TUN_S_METER	I	TUNER signal meter		A/D input, Each threshold is decided depending on the data in PACK
100	DCERR	I	DC error detection		Vth: 1.6V, Error is detected by the "AND" operation with #79 (OFFDET)

Truth Value Table

① Destination switching port

TYPE 1 (75Pin)	TYPE 2 (61Pin)	TYPE 3 (62Pin)	Type of vehicle	Destination
Information on the type of vehicles	Destination information			
L	L	L	D07	Japan
L	L	H		Europe
L	H	L		North America
L	H	H		Australia
H	L	L	A07	Japan
H	L	H		Europe
H	H	L		Reserve
H	H	H		Australia

* Handle information is obtained from CAN
* Information on America and Canada is obtained from CAN

② FLASH writing switching port

FLMD0	FLMD1	Operation mode
0	Arbitrary	Normal operation mode
VDD	0	Flash memory programming mode
VDD	VDD	Setup is inhibited

MICROCOMPUTER'S TERMINAL DESCRIPTION

③ RESET terminal

BU3.3 voltage	External input		μ-com terminal	μ-com status
RST-IC_OUT	SA_RST_S	FLASH_RST	RESET	
L	L	L	L	μ-com reset status
L	L	H	L	μ-com reset status
L	L	OPEN	L	μ-com reset status
L	H	L	L	μ-com reset status
L	H	H	L	μ-com reset status
L	H	OPEN	L	μ-com reset status
L	OPEN	L	L	μ-com reset status
L	OPEN	H	L	μ-com reset status
L	OPEN	OPEN	L	μ-com reset status
H	L	L	L	μ-com reset status
H	L	H	L	μ-com reset status
H	L	OPEN	L	μ-com reset status
H	H	L	L	μ-com reset status
H	H	H	H	μ-com normal status
H	H	OPEN	H	μ-com normal status
H	OPEN	L	L	μ-com reset status
H	OPEN	H	L	μ-com reset status
H	OPEN	OPEN	L	μ-com reset status

④ Source and VICS information source

Source	FMM_SW	RF	VICS information source
FM	L	Radio	TV
AM (LW ,MW)	L	Radio	TV
DVD(CD)	H	TV	Radio
CD-CH	H	TV	Radio
AUX	H	TV	Radio
HDD	H	TV	Radio
Analog TV	H	TV	Radio
Digital TV	H	TV	Radio
One-seg digital TV	H	TV	Radio

⑤ Input source switching

Source	AUDIO_SEL2	AUDIO_SEL1
AM	L	L
FM	L	H
One-seg digital TV	H	L
Analog TV	H	H
Other	Don't Care	

● PANEL MICROCOMPUTER MB95F118AS105 (X34-553: IC5)

Pin No.	Pin Name	I/O	Application	Processing Operation Description
1	FL_CLK	O	FL clock output terminal	Communication speed: 1MHz (Max.)
2	FL_SO	O	FL data output terminal	Communication speed: 1MHz (Max.)
3	FL_CS	O	FL chip select terminal	L: Can transfer data, H: Cannot transfer data (Since the signal will be logically reversed in circuit.)
4	TYPE1	I	Destination determination	L: D07MONI, A07PANEL, H: A07MONI
5	TYPE2	I	Destination determination	L: D07MONI, A07MONI, H: A07PANEL
6,7	KR5, KR6	I	Key scan pulse input terminal	
8,9	NC	O	Not used	Output L fixed
10,11	NC	I	Not used	NC but set up input such that it is consistent with the other models.
12	AVSS	-		
13	AVCC	-		
14~17	KR1~KR4	I	Key scan pulse input terminal	
18	FL_RESET	O	FL reset terminal	H: FL reset, L: Clear FL reset
19	I2C_SDA	I/O	SDA of ROM correction E2P	
20	I2C_SCL	I/O	SCL of ROM correction E2P	
21	MOD	-	Operation mode specification terminal	4.7kΩ pull down
22	X0	-	4.0MHz (Multiply with 2.5 times =10MHz)	
23	X1	-	4.0MHz (Multiply with 2.5 times =10MHz)	
24	VSS	-	GND	
25	VCC	-	Power supply MAX3.3V	
26	5V_SW	O	FL logic power supply 5V	H: Logic power ON, L: Logic power OFF

MICROCOMPUTER'S TERMINAL DESCRIPTION

Pin No.	Pin Name	I/O	Application	Processing Operation Description
27	16V_SW	O	FL driver power supply 16V	H: Driver power ON, L: Driver power OFF
28	NC	O	Not used	Output L fixed
29	RST	-	Reset input from system µ-com	L: Reset
30	ENC_DW	I	Rotary encoder SW (B phase wave form)	Port monitoring of pulse with 1ms cycle timer
31	ENC_UP	I	Rotary encoder SW (A phase wave form)	Port monitoring of pulse with 1ms cycle timer
32	HTR	I	Notification of HTRCOM operation	H: HTRCOM operation, L: HTRCOM stop
33	BRIGHT	I	Notification of bright information	H: Bright ON, L: Bright OFF
34~36	KS1~KS3	O	Key scan pulse output terminal	
37	NC	I	Not used	NC but set up input such that it is consistent with the other models.
38	SP_DATA_S	I	Data input from system µ-com to panel µ-com	UART 19379bps
38	FLASH_UI0	I	Serial data input terminal	
39	SP_DATA_P	O	Data output from panel µ-com to system µ-com	UART 19379bps
39	FLASH_UO0	O	Serial data output terminal	
40	NC	O	Not used	Output L fixed
40	FLASH_UCK0	I	Serial clock input terminal	
41	NC	O	Not used	Output L fixed
41	FLASH_P13	I	Operation mode specification terminal	L: When used to write serial data
42	NC	O	Not used	Output L fixed
43~46	NC	I	Not used	NC but set up input such that it is consistent with the other models.
47	KS4	O	Key scan pulse output terminal	
48	POWER	I	Power key	L: Press key, H: Do not press key

● PANEL (HEATER CONTROL) MICROCOMPUTER MB89F538-1Y8 (X34-405: IC1)

Pin No.	Pin Name	I/O	Application	Processing Operation Description
1	SH_DATA_H	O	HTR-C µ-com → System µ-com data output	Communication speed: 4800bps
2	SH_DATA_S	I	System µ-com → HTR-C µ-com data output	Communication speed: 4800bps
3	MOD2	I	Memory access mode setting input terminal for when FLASH	Always L input
4	TYPE1	I	Destination setting	4V or higher: Left-hand steering 2V or lower: Right-hand steering
5	TYPE2	I	Destination setting	4V or higher: SINGLE, 2V or lower: DUAL
6	TYPE3	I	Destination setting	4V or higher: 15~29°C, 2V or lower: 18~32°C
7~11	NC	O	Not used	Output L fixed
12	AVCC	-	A/D converter power supply terminal	
13	AVR	-	A/D converter standard voltage input terminal	
14	AVSS	-	A/D converter power supply terminal	
15	NC	I	Not used	Input fixed
16	ACC_DET	I	ACC detection	L: ACC ON, H: ACC OFF, Detected voltage: 8.9V
17~19	NC	I	Not used	Input fixed
20	RST	-	Reset input terminal	L: Reset
21	MD0	-	Input terminal for memory access mode setting	H: When writing FLASH µ-com, L: Other
22	MD1	-	Input terminal for memory access mode setting	H: When writing FLASH µ-com, L: Other
23	X0	-	Oscillator connection terminal	12.288MHz
24	X1	-	Oscillator connection terminal	12.288MHz
25	VSS	-	Power supply terminal	

MICROCOMPUTER'S TERMINAL DESCRIPTION

Pin No.	Pin Name	I/O	Application	Processing Operation Description
26,27	NC	O	Not used	Output L fixed
28	HTR	O	Terminal for determining bright terminal valid/ invalid	Start operating when the heater control μ-com IGN ON, and at the point when the air-conditioner data is finalized at UART, ON. H: ON, L: OFF
29	BRIGHT	O	Output terminal for bright information from vehicle	At the point when the bright data is finalized at UART, ON. H: ON, L: OFF
30	FLASH_MOD	I	Input terminal for FLASH writing setting	Always L input
31	R-DEF	O	Rear DEF indicator control terminal	LED luminance control by PWM control, 2 steps brightness, 4ms cycle PWM
31	P22	I	Input terminal for FLASH writing setting	H: When writing FLASH μ-com
32	F-DEF	O	Front DEF indicator control terminal	LED luminance control by PWM control, 2 steps brightness, 4ms cycle PWM
33	KEY_DET	O	Panel key operation check	When key or encoder is input, "H" is output at 100ms (in test mode only)
34~36	ENC_L3~ENC_L1	I	Rotary encoder (left) pulse count input terminal	
37~39	ENC_R3~ENC_R1	I	Rotary encoder (right) pulse count input terminal	
40,41	KR3, KR2	I	Key scan pulse input terminal	
41	P10	I	Input terminal for FLASH writing setting	H: When writing FLASH μ-com
42,43	KR1, KR0	I	Key scan pulse input terminal	
44~46	KS2~KS0	I/O	Key scan pulse output terminal	
47	NC	O	Not used	Output L fixed
48	SCL	I/O	Outputs clock to E2PROM	
49	SDA	I/O	Outputs serial data to E2PROM	
50	FLASH: [C] MASK: [NC]	-	In FLASH products, connect 0.1μF, and in MASK products, NC (no connection)	
51,52	NC	O	Not used	Output L fixed
53	HTR_ECU_TX	O	HTR-C μ-com → HTR-C ECU	4800bps
54	HTR_ECU_RX	I	HTR-C ECU → HTR-C μ-com	4800bps
55	FL_BLK	O	FL display tube blank control terminal	FL display tube luminance control by PWM control H: Blank (display OFF)
56	ILL_DET-	I	ILL- detection (pulse input)	
57	VCC	-	Power supply terminal	
58	ILL_DET+	I	ILL+ detection	ILL ON: H
59	FL_FIL_ON	I/O	FL tube filament power supply control SW	Hi-Z: OFF, L: ON. Timing is the same as DC_DC_ON
60	FL_LAT	O	FL data latch control terminal	Execute output OFF count while not displayed.
61	FL_CLK	O	FL clock output terminal	Sync clock output while VFD serial communication
61	FLASH_CLK	O	Clock output to ROM writer (For FLASH μ-com only)	Clock transmission to ROM writer (communication speed is dependent on ROM writer)
62	FL_SO	O	FL data output terminal	Display data transmission to VFD
62	FLASH_SO	O	Data output to ROM writer (For FLASH μ-com only)	Data transmission to ROM writer (communication speed is dependent on ROM writer)
63	FLASH_SI	I	Data input from ROM writer (For FLASH μ-com only)	Data reception from ROM writer (communication speed is dependent on ROM writer)
63	NC	O	For mask μ-com, Not used	Output L fixed
64	DC_DC_ON	I/O	FL tube power supply control terminal	Hi-Z: ON, L: OFF

TEST MODE

Summary of functions (Engineering Diag)

■ Overview

This diag is intended to perform the following operations.

① This is used by KW quality assurance personnel and KW service person to check the status of the unit when it is malfunctioning, failed, etc.

■ How to enter commands

Engineering Diag Mode: On the AUDIO OFF (Full control) screen, pressing the touch panel in the following order of sequence makes the unit shift to the Engineering Diag mode.

AUDIO OFF (Full control) screen

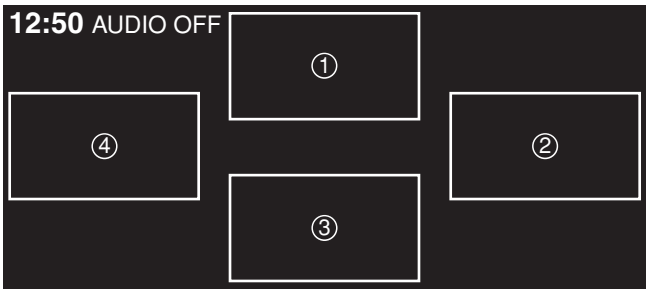

Procedure: By pressing the hidden key in the following order of the sequence, the unit is shifted to the Engineering Diag mode.

Step 1: Press ① upper key
Step 2: Press ③ lower key
Step 3: Press ① upper key
Step 4: Press ③ lower key
Step 5: Press ① upper key
Step 6: Press ③ lower key
Step 7: Press ④ left key
Step 8: Press ② right key

If wrong command is entered, it is required to re-enter the commands from the first command. When this screen is closed, the entered commands are initialized.

■ Cancel condition

Pressing Exit key on the Engineering Diag Menu screen returns the screen to the map screen. (If the map DISK is not inserted in the unit, the Caution screen is shown.)
The Diag mode is cleared by ACC OFF.
∗ Since the external keys, except for the external keys on the specific screen, are disabled, the test mode cannot be cleared by the external key.

■ BEEP condition

In the Diag mode, the beep sound shall be sounded only once when the key that has been enabled is pressed.

■ On screen and interrupt condition

The On Screen Display is not shown. (Easy status, Voice recognition and Notification On Screen)
A screen shall not be shifted to other screen in response to the navigation interrupt or rear camera interrupt. (The Diag mode cannot be cleared by the interrupt.)

■ Condition to enable Panel key

In the Diag mode, the key that shifts one screen to other screen shall not be enabled. (The Diag mode cannot be cleared by the operation of the panel key.)
PTT key (for voice recognition) shall not be enabled.
Panel keys that control the audio operations shall be enabled.

■ Display condition

• Zero padding and zero suppression of numbers
No effort is paid to keep consistency in the zero padding and zero suppression because the different reference models are adopted.
In principle, the zero padding notation is used for the notation of HEX and date, and for the notation of others, the zero padding and zero suppression are used such that they are in compliance with the specification of each screen.

■ Data display format when the screen is shifted

In carrying out the data acquisition from audio to navigation (Audio → Navi), the data is shown in the format used in the audio side when shifting the screen, and if the data cannot be acquired by navigation side successfully from the audio side then the data section on the screen shall be blank.

TEST MODE

Screen tree structure (Engineering Diag)

Only for Japan destination On Screen

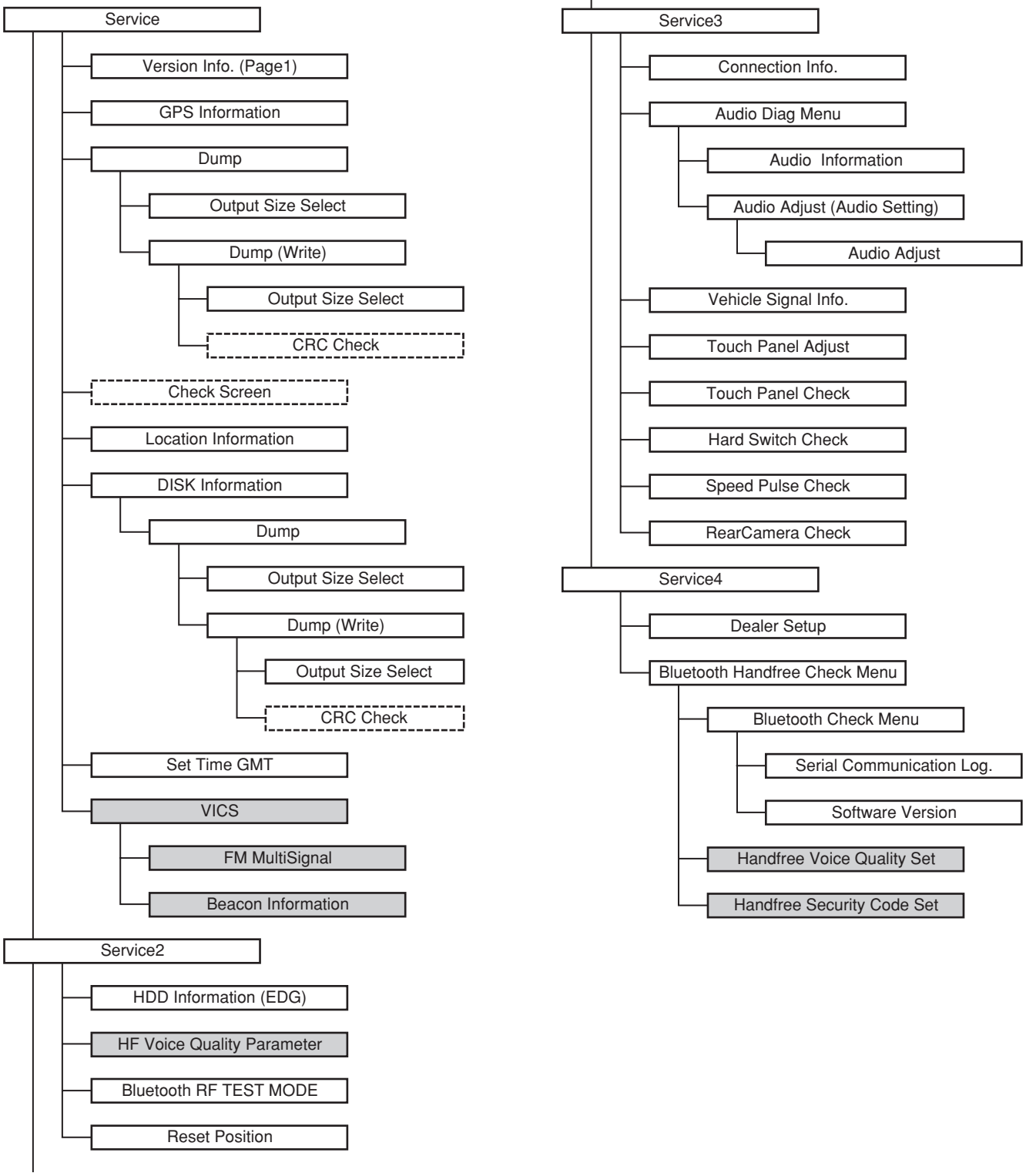

TEST MODE

Screen configuration (Engineering Diag)

■ Engineering Diag Menu (Page1) screen

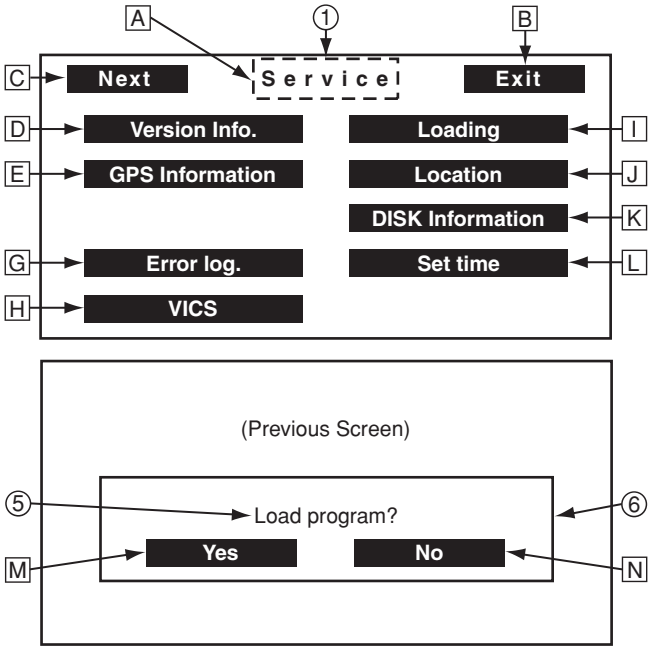

● Description of operations/Status/Setting

1 Title
A Shift to “Developer Diag Menu (Page1)” screen. (Press and hold for 3 seconds to make the key hidden; Hidden (Transparent) key.)
B Return to NAVI map screen. (If the map DISK is not inserted, the Caution screen is shown.)
C Shift to “Engineering Diag Menu (Page2)” screen.
D Shift to “Version Info. (Page1)” screen.
E Shift to “GPS Information” screen.
G Shift to “Dump” screen.
H Shift to “VICS” screen. (Only in Japan model)
I Load program. (On Screen Display)
J Shift to “Location Information” screen.
K Shift to “DISK Information” screen.
L Shift to “Set Time GMT” screen.

5 Program load message
6 On Screen frame
M Run the program load.
N Cancel the program load.

■ Version Info. (Page1) screen

● Description of operations

1 Title
6 Model name
7 Main program version
8 Kanji ROM version
9 Map version
14 Design data file version (Only for Japan model)
A Shift to “Engineering Diag Menu (Page1)” screen.

■ GPS Information screen

∗ Only for oversea destination

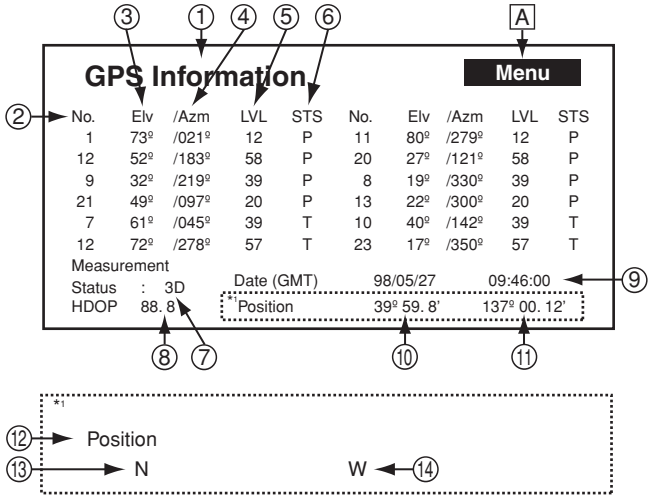

● Description of operations

1 Title
2 No. (Satellite number)
3 Elv (Elevation angle)
4 Azm (Azimuth angle)
5 LVL (Signal level)
6 STS (Receive status)
7 Measurement Status
8 HDOP (Positioning accuracy)
9 Date (GMT). Also use GMT in the model with the domestic destination
10 Latitude

TEST MODE

11 Longitude
12 Item_Position (Only for Japan destination)
13 Item_Latitude (Except for Japan destination)
14 Item_Longitude (Except for Japan destination)
A Shift to “Engineering Diag Menu (Page1)” screen.

■ Dump screen

∗ The number of byte to be read is selectable from 1Byte, 2Byte and 4Byte.

Select 1Byte as a default value when shifting from “Engineering Diag Menu (Page1) screen”, “DISK Information screen” or “Developer Diag Menu (Page1) screen”.

Retain the last value when shifting from “Dump (Output) screen” (Selection of output media) by using the Return SW.

Retain the value that has been set up in “Dump (Write) screen” when shifting from “Dump (Write) screen” (Dump list writing screen) by using the Return SW.

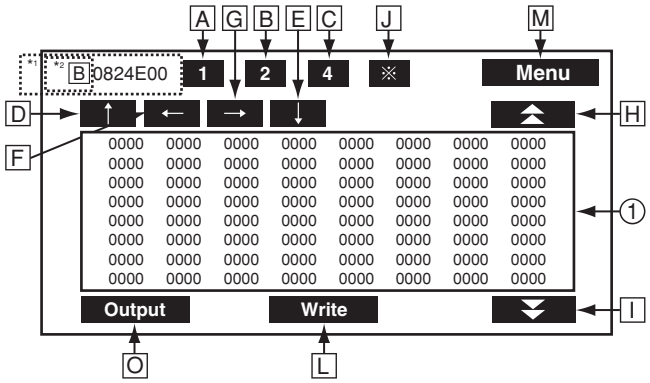

● Description of operations

1 Dump list
2 Pointer cursor
3 Pointer
A Set 1 in the number of byte to be read.
B Set 2 in the number of byte to be read.
C Set 4 in the number of byte to be read.
D Increase the pointer value.
E Decrease the pointer value.
F Move the pointer cursor to left.
G Move the pointer cursor to right.
H Display the preceding page.
I Display the succeeding page.
J Set the pointer value.
L Re-write the dumped value (Shift to “Dump (Write)” screen)
M Shift to “Engineering Diag Menu (Page1)” screen.
Shift to “DISK Information” screen.(When shifting from DISK Information screen.)
O Save in the external equipment (Shift to “Output Size Select” screen).

■ Dump (Write) screen

This screen is intended to write data in NAVI (internal memory).

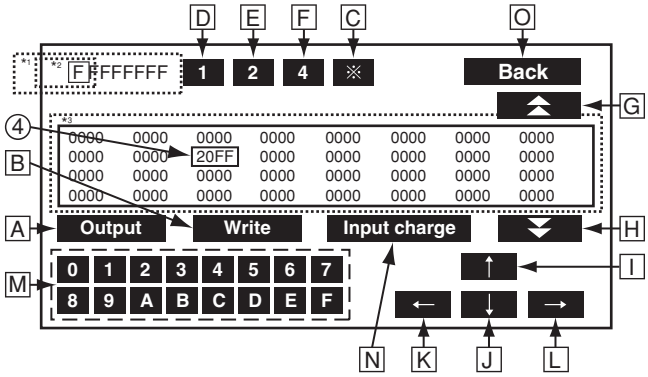

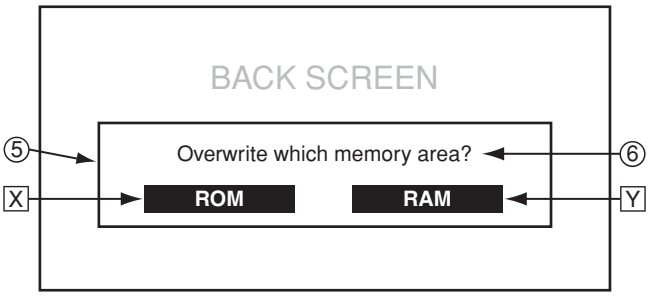

● Description of operations

1 Pointer
2 Pointer cursor
3 Dump list
4 Dump list cursor
A Save in the external equipment (Shift to “Output Size Select” screen).
B Display “CRC Check” screen (On Screen).
C Set the pointer value.
D Set 1 in the number of byte to be read.
E Set 2 in the number of byte to be read.
F Set 4 in the number of byte to be read.
G Display the preceding page.
H Display the succeeding page.
I Move the pointer cursor up.
J Move the pointer cursor down.
K Move the pointer cursor to left.
L Move the pointer cursor to right.
M Enter the value, 0~F.
N Switch pointer and dump list inputs.
O Shift to “Dump” screen
5 On Screen frame
6 Message
X Write the message in ROM area.
Y Write the message in RAM area.

∗ After the completion of data writing, close the On Screen window and display “Dump (Write)” screen again.

TEST MODE

■ Dump (Output) screen

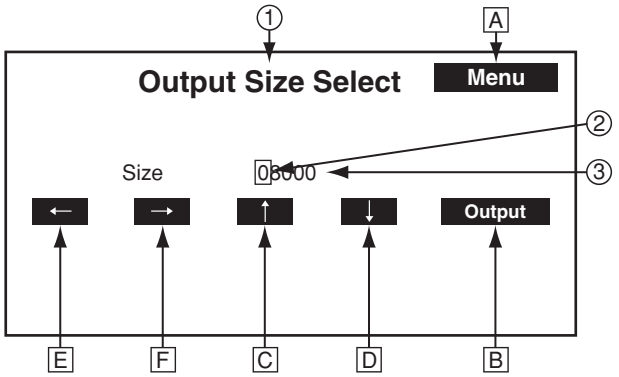

● Description of operations

1 Title
2 Size cursor
3 Size
A Shift to the previous screen that was shown before shifting this screen.
B Output the dump list to the external equipment.
C Increase size.
D Decrease size.
E Move the size cursor to left.
F Move the size cursor to right.

■ VICS screen

∗ This screen is available only in the Japan model.

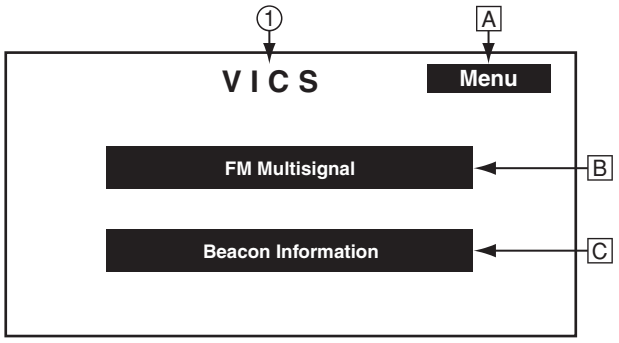

● Description of operations

1 Title
A Shift to “Engineering Diag Menu (Page1)” screen.
B Shift to “FM Multisignal” screen.
C Shift to “Beacon Information” screen.

■ FM Multisignal screen

∗ This screen is available only in the Japan model.

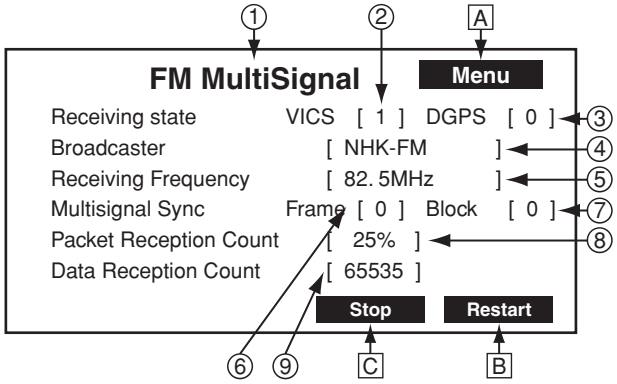

● Description of operations

1 Title
2 VICS receiving status
3 DGPS receiving status
4 Name of broadcaster (station)
5 Receiving frequency
6 Frame synchronization
7 Block synchronization
8 Packet receive rate
9 Number of receive data
A Shift to “VICS” screen.
B Restart counting the number of receive data.
C Stop counting the number of receive data.

■ Beacon Information screen

∗ This screen is available only in the Japan model.

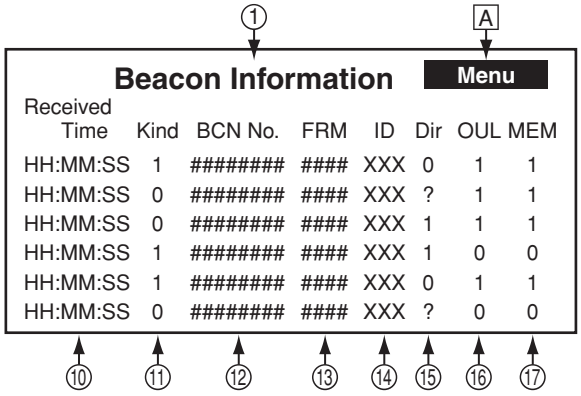

● Description of operations

1 Title
10 Received time
11 Kind
12 BCN
13 FRM
14 ID
15 Direction

TEST MODE

16 Optical Uplink
17 MEM
A Shift to “VICS” screen.

■ Location Information screen

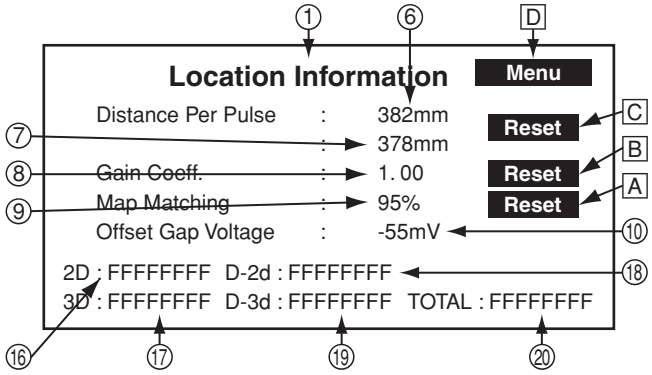

● Description of operations

1 Title
6 Moving distance per one pulse (Present value)
7 Moving distance per one pulse (Average value)
8 Gain correction coefficient
9 Map matching percentage
10 Offset voltage value
16 GPS receiving rate (2D)
17 GPS receiving rate (3D)
18 GPS receiving rate (D-2d)
19 GPS receiving rate (D-3d)
20 GPS receiving rate (TOTAL)
A Reset the map matching percentage.
B Reset the gain correction coefficient.
C Reset present moving and average moving distances.
D Shift to “Engineering Diag Menu (Page1)” screen.

■ DISK Information screen

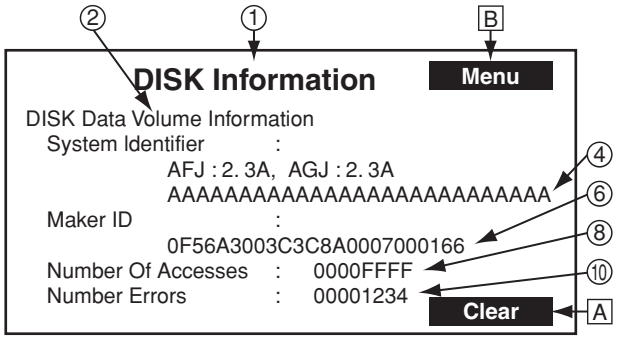

● Description of operations

1 Title
2 Subtitle
4 Format version
6 Maker ID
8 Number of disc accesses
10 Number of errors
A Clear the number of disc accesses and of errors.
B Shift to “Engineering Diag Menu (Page1)” screen.

■ Set Time GMT screen

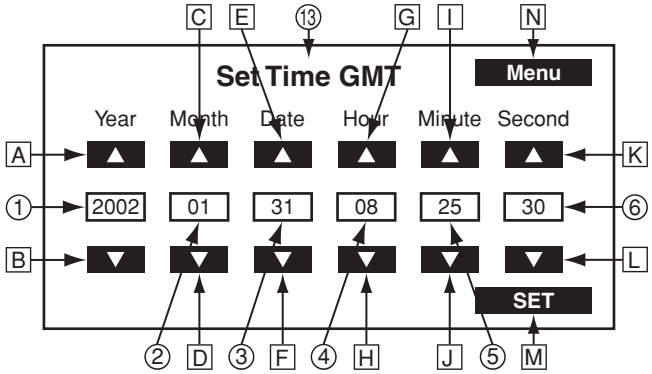

● Description of operations

1 Year
2 Month
3 Date
4 Hour
5 Minute
6 Second
13 Title
A Year_Up key
B Year_Down key
C Month_Up key
D Month_Down key
E Date_Up key
F Date_Down key
G Hour_Up key
H Hour_Down key
I Minute_Up key
J Minute_Down key
K Second_Up key
L Second_Down key
M Set the time.
N Shift to “Engineering Diag Menu (Page1)” screen.

∗ Up/Down key is not toned down even when it is disabled.

TEST MODE

■ Engineering Diag Menu (Page2) screen

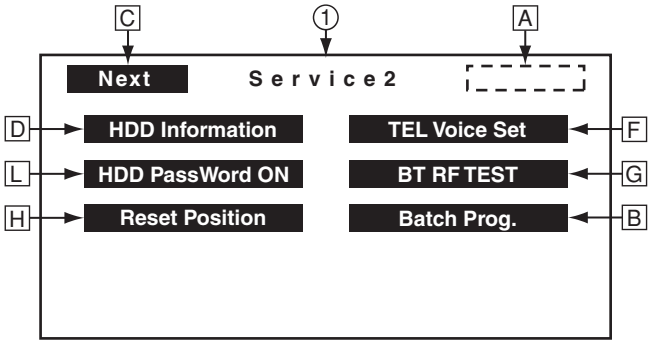

● Description of operations

1 Title
A Open the panel. (Only for ZR1) (Only for Japan destination)
B Run the batch program. (On Screen Display is shown.) (Only for Japan destination)
C Shift to “Engineering Diag Menu (Page3)” screen.
D Shift to “HDD Information” screen. (Only for Japan destination)
F Shift to “HF Voice Quality Parameter” screen. (Only for Japan destination)
G Shift to “BT RF Test” screen.
L Turn ON/OFF “HDD password setup”. (Only for Japan destination)
H Shift to “Reset Position” screen.

■ HDD Information screen

∗ This screen is available only in the Japan model.

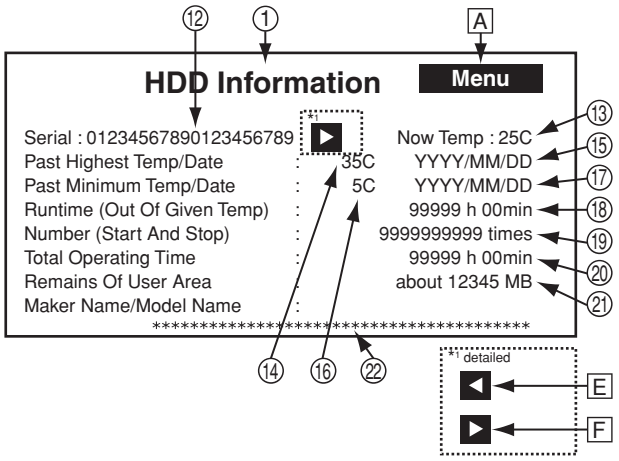

● Description of operations

1 Title
12 Present temperature
13 Serial
14 Past highest temperature
15 Past highest temperature (Date when hit the record)
16 Past minimum temperature
17 Past minimum temperature (Date when hit the record)
18 Period of time when it is outside of the exceeding the assured temperature range
19 Number of start and stop operations
20 Total operating time (Accumulated operation period of time)
21 Capacity of remaining user area
22 Maker name and Model name
A Shift to “Engineering Diag Menu (Page2)” screen.
E Scroll character to left.
F Scroll character to right.

■ HF Voice Quality Parameter screen

∗ This screen is valid only in the Japan model.

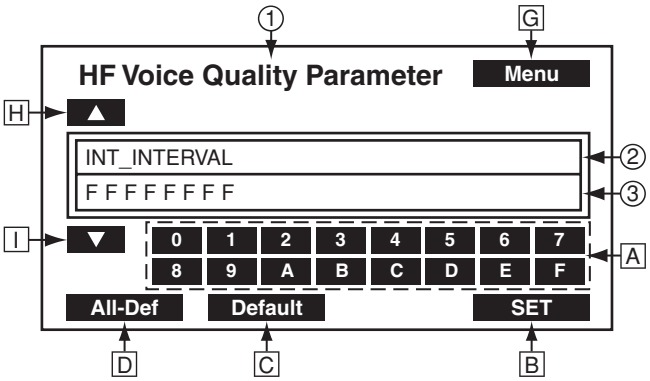

● Description of operations

1 Title
2 Parameter name
3 Parameter value
A Enter the value, 0~F.
B Set the parameter value.
C Reset the parameter value to the initial (default) value.
D Reset all the parameter values to their initial (default) value.
G Shift to “Engineering Diag Menu (Page2)” screen.
H Display the preceding parameter.
I Display the succeeding parameter.

■ BT RF Test screen

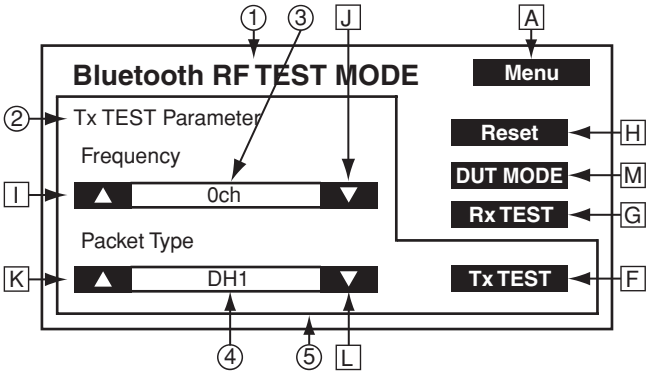

TEST MODE

● Description of operations

1 Title
2 Tx TEST title
3 Frequency
4 Packet type
5 Parameter frame
A Shift to “Engineering Diag Menu (Page2)” screen.
∗ Menu key is toned down whenever any one of SWs displayed on the screen is pressed for one time.
F Run the Tx test.
G Run the Rx test.
H Reset test results.
I Increase frequency.
J Decrease frequency.
K Display the preceding packet type.
L Display the succeeding packet type.
M Start the test mode.

In Rx testing or Tx testing, use UP/DOWN key to tone down. Do not tone down with the setup value.

∗ After operating SW on this screen, turn on or off ACC (ACC OFF/ON) in order to reboot the navigation.

■ Reset Position screen

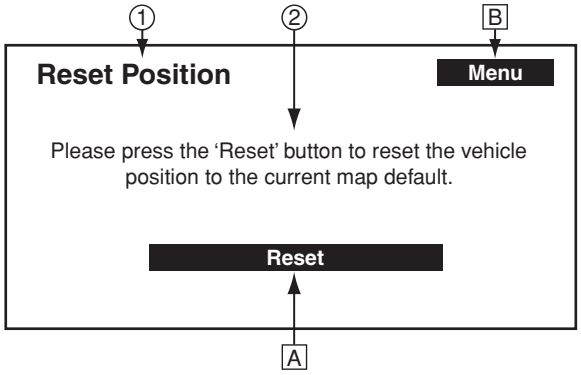

● Description of operations

1 Title
2 Texts
A Reset present position to the default setup. (Oversea model) This button shall always be able to be pressed regardless of the navigation disc.
B Shift to “Engineering Diag Menu (Page2)” screen.

■ Engineering Diag Menu (Page3) screen

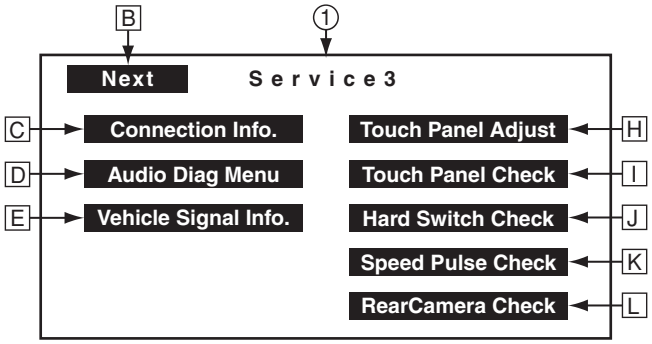

● Description of operations

1 Title
B Shift to “Engineering Diag Menu (Page4)” screen.
C Return to NAVI map screen. (If the map DISK is not inserted, the Caution screen is shown.)
D Shift to “Audio Diag Menu” screen.
E Shift to “Vehicle Signal Info.” screen.
H Shift to “Touch Panel Adjust (Page1)” screen.
I Shift to “Touch Panel Check” screen.
J Shift to “Hard Switch Check” screen.
K Shift to “Speed Pulse Check” screen.
L Shift to “Rear Camera Check” screen.

■ Connection Info. screen

• Connection status of externally connected equipment is displayed.
• Connection status of speaker can be checked.
∗ When the equipment is connected it is shown in blue and when not connected it is shown in red.

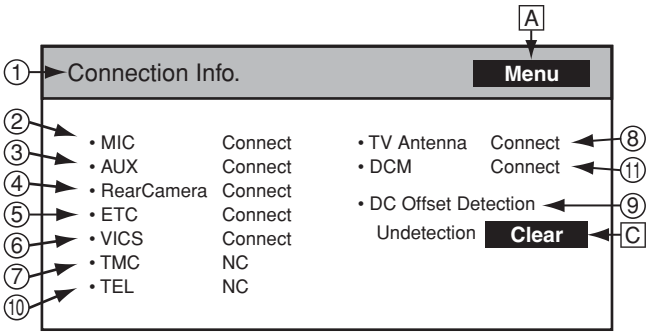

● Description of operations

1 Title
2 Display connection status of the MIC unit.
3 Display connection status of the AUX unit.
4 Display connection status of the Rear Camera unit.
5 Display connection status of the ETC unit. (Only in Japan model)
6 Display connection status of the VICS antenna. (Only in Japan model)

TEST MODE

7 Display connection status of the TMC unit. (Except in Japan model)

8 Display connection status of the TV antenna. (Only for Japan destination)

9 DC offset detection

∗ Unlike the “DC offset detection” on the Audio Information screen, this DC offset is set to be “Detection” when “DC offset detection” becomes “Detection” or when it becomes “Number of DC offset (one or more times)”.

When Undetection is detected and when the number of DC offset is 0, Undetection is displayed.

When the proper value cannot be acquired, blank is displayed.

10 TEL (handsfree) detection

11 DCM (G-BOOK) detection (Only for Japan destination)

A Return to “Engineering Diag Menu (Page3)” screen.

C DC offset detection/Number of DC offset detection clear key

∗ This key performs the same operation as the operation of the key in the Audio Information screen.

■ Audio Diag Menu screen

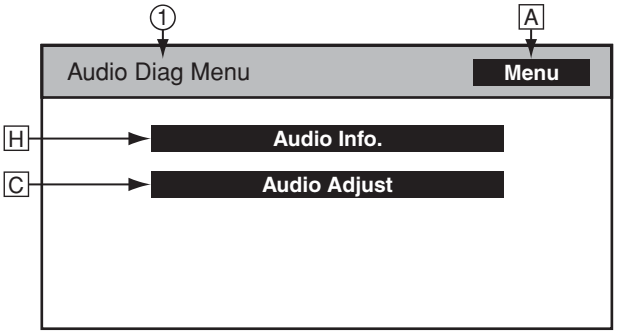

● Description of operations

1 Title

A Shift to “Engineering Diag Menu (Page3)” screen.

H Shift to “Audio Information” screen.

C Shift to “Audio Setting” screen.

Refer to the followings for the valid panel key in the Diag mode (page 27).

■ Audio Information screen

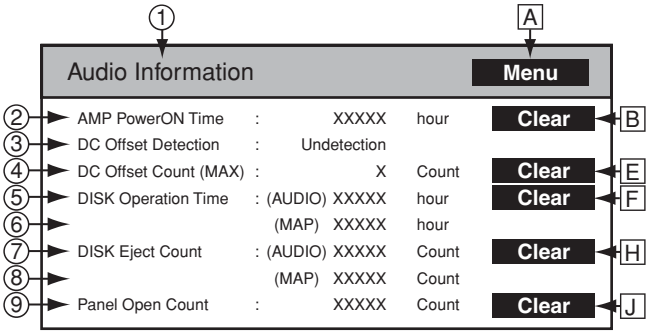

● Description of operations

1 Title

2 AMP Power ON Time

∗ The display shall be updated every time when there is any change in the data.

At Audio side;

- Count the time from 0 to 60000 hours and record the count by the hour in E2PROM.
- When ACC turns on (OFF → ON) at 1 hour 59 minutes, keep counting from that timing (1 hour 59 minutes)
- When ACC is reset at 1 hour 59 minutes, keep counting from 1 hour 00 minute.

3 DC offset detection

∗ The display shall be updated every time when there is any change in the data.

4 Number of DC offset detection

∗ The maximum number (up to 4 times) of DC offset detections is shown.

∗ The display shall be updated every time when there is any change in the data.

5 Disc operation time (AUDIO)

∗ The display shall be updated every time when there is any change in the data.

At Audio side;

- Count the time from 0 to 60000 hours and record the count by the hour in E2PROM.
- When ACC turns on (OFF → ON) at 1 hour 59 minutes, keep counting from that timing (1 hour 59 minutes)
- When ACC is reset at 1 hour 59 minutes, keep counting from 1 hour 00 minute.

6 Disc operation time (MAP)

∗ The display shall be updated every time when a screen is shifted to other screen.

At Audio side;

- Count the time from 0 to 5461 hours and record the count by the hour in E2PROM.

TEST MODE

- When ACC turns on (OFF → ON) at 1 hour 59 minutes, keep counting from that timing (1 hour 59 minutes)
- When ACC is reset at 1 hour 59 minutes, keep counting from 1 hour 00 minute.

7 Number of disc ejection (AUDIO)
∗ The display shall be updated every time when there is any change in the data.
- Count from 0 to 60000 times.
- Record the number by the count in E2PROM.

8 Number of disc ejection (MAP)
∗ The display shall be updated every time when a screen is shifted to other screen.
At Audio side;
- Count from 0 to 60000 times.
- Record the number by the count in E2PROM.

9 Number of panel mechanism operations (open and close)
∗ The display shall be updated every time when a screen is shifted to other screen.
At Audio side;
- Count from 0 to 60000 times.
- Record the number by the count in E2PROM.
- When the panel is fully opened, it is counted as one time (one count).

A Return to “Audio Diag Menu” screen.
B AMP Power ON Time clear key
E DC offset detection/Number of DC offset detection clear key
F Disc operation time (AUDIO) clear key
H Number of disc ejection (AUDIO) clear key
J Number of panel mechanism operations clear key

■ Vehicle Signal Info. screen

- Display CAN connection status.
- Display connection status in vehicle signal.
- Display connection status of the GPS Antenna.

∗1 When the equipment is connected it is shown in blue and when not connected it is shown in red.
This display shall indicate the status.

∗2 Unlike the Maker Line Diag, the ON/OFF condition of the vehicle speed shall be such that the vehicle speed is turned ON when the vehicle speed reaches the forced running by the navigation.

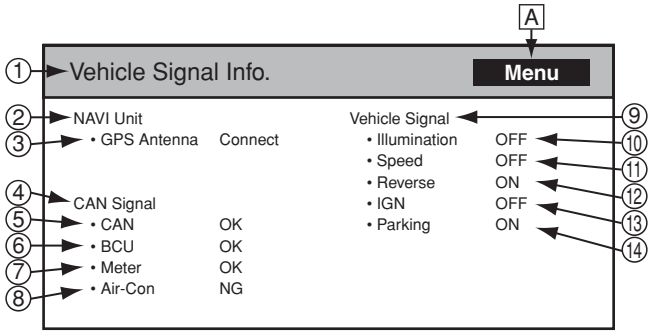

● Description of operations

1 Title
2
3 Display connection status of the GPS Antenna.
4
5 Display CAN Unit line information.
6 Display Body Control Unit status.
7 Display Meter Unit status.
8 Display Air-Con status.
9
10 Display illumination status in vehicle signal.
11 Display vehicle speed information in vehicle signal.
12 Display reverse status in vehicle signal.
13 Display ignition status in vehicle signal.
14 Display parking status in vehicle signal.
A Return to “Engineering Diag Menu (Page3)” screen.

■ Touch Panel Adjust screen

∗ The correction mark shall be designed such that the center point can be identified clearly (such as +, X, etc).
Modified for 4-point touch correction.

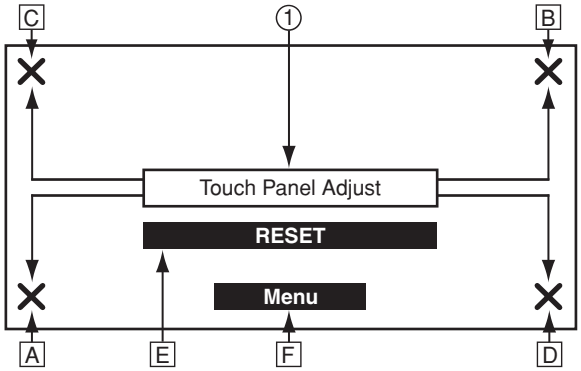

● Description of operations

1 Title
Touch correction shall be made in the following order of the sequence: “Lower left correction → Upper light correction → Upper left correction → Lower right correction”
E Shift to “Engineering Diag Menu (Page3)” screen. (Touch correction reset)

TEST MODE

F Shift to “Engineering Diag Menu (Page3)” screen.

A (This is shown when making the lower left correction.) Shift to the status that makes the upper right correction.

B (This is shown when making the upper right correction.) Shift to the status that makes the upper left correction.

C (This is shown when making the upper left correction.) Shift to the status that makes the lower right correction.

D (This is shown when making the lower right correction.) Make the touch corrections based on the data that are obtained by pressing the four points, and then shift to “Engineering Diag Menu (Page3)” screen. But when the coordinate that has been touched is way off from the center coordinate of A~D, it is decided to be an abnormal case, in which the touch correction is not made or the screen is not shifted to Menu screen. (Use Menu button to manually return the screen to the Menu screen.)

The touch correction value is calculated by the audio μ-com side.

∗1

- When shifting to Touch Panel Adjust screen, the status that the touch correction is underway is notified to the audio μ-com side.
- When closing Touch Panel Adjust screen, the status that the touch correction is not underway is notified to the audio μ-com side.

∗2 The center position of the touch coordinate is tabulated in the following tables:

On the design coordinates

	Width	Height
LCD	800	480
Upper left	60	60
Lower left	60	419
Upper right	739	60
Lower right	739	419

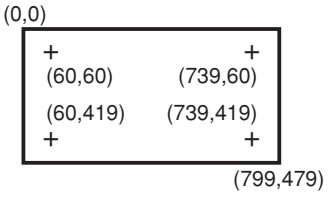

On the design coordinates (where the over scan is taken into account)

	Width	Height
Design	832	496
Upper left	76	68
Lower left	76	427
Upper right	755	68
Lower right	755	427

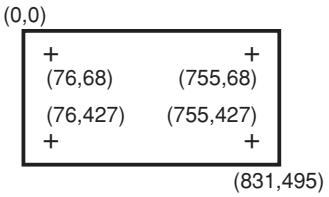

Audio BUS (On the communication data)

	X	Y
Lower left	19	32
Upper left	19	223
Lower right	236	32
Upper right	236	223

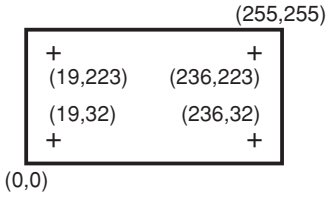

■ Touch Panel Check screen

- This screen is to show the status of touch panel when it is pressed.

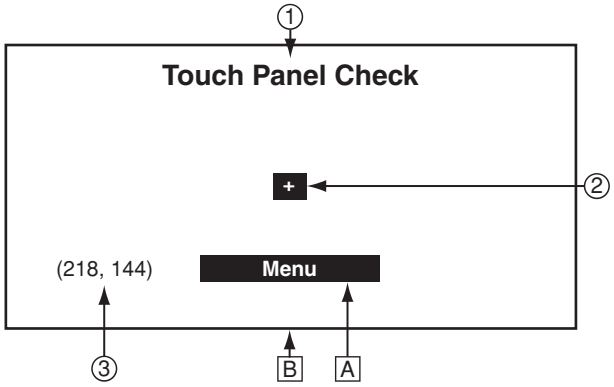

● Description of operations

1 Title

2 Cursor (shown on the touched coordinates)

3 Position in coordinates (Coordinates of the touched position are shown)

A Return to “Engineering Diag Menu (Page3)” screen.

B Zone to accept the touch

■ Hard Switch Check screen

- The status of the hard switch (if it is pressed or not) is shown.

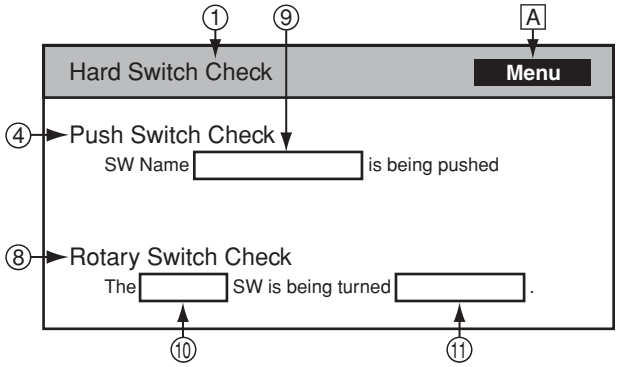

● Description of operations

1 Title

4 Check that the key has been pressed.

8 Check the rotary encoder

9 Name of the key that is pressed

TEST MODE

10 Name of the key that is operated
11 Direction of switch rotation
A Return to “Engineering Diag Menu (Page3)” screen.

■ Speed Pulse Check screen

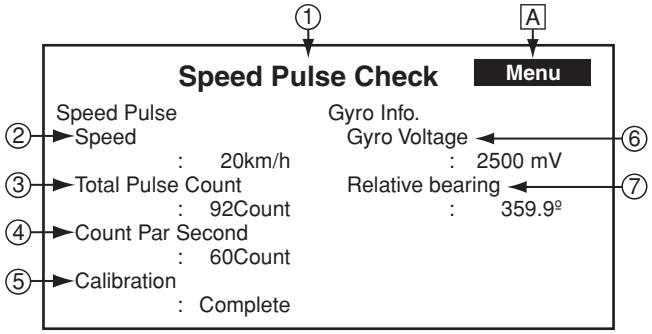

● Description of operations
1 Title
2 Vehicle speed
3 Number of accumulated pulse count
4 Number of pulse that should be added
5 Calibration of pulse count
6 Voltage value
7 Relative azimuth (Heading in horizontal plane)
A Shift to “Engineering Diag Menu (Page3)” screen.

■ RearCamera Check screen

• Adjust the position of the rear camera marker (guideline).

● Description of operations
A Return to “Engineering Diag Menu (Page3)” screen.

∗1 Picture from the rear camera is used as a backdrop picture.

■ Engineering Diag Menu (Page4) screen

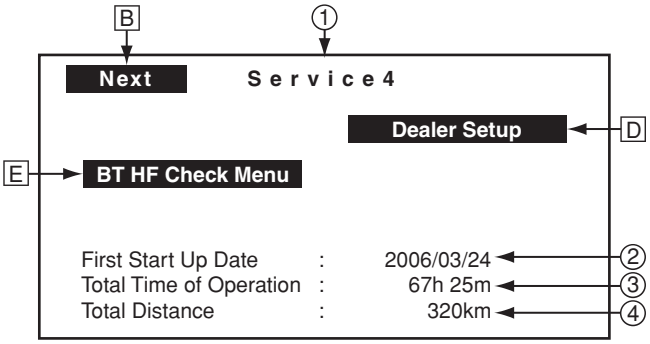

● Description of operations
1 Title
2 Start day of operation (Only for Japan destination)
3 Accumulated operation time (Only for Japan destination)
4 Accumulated distance (Only for Japan destination)
B Shift to “Engineering Diag Menu (Page1)” screen.
D Shift to “Dealer Setup” screen.
E Shift to “Bluetooth Handefree Check Menu” screen.

■ Dealer Setup screen

Items that have to be set up by dealer

• This screen is to show if the TV Antenna is connected or not.
• This screen can be used to switch FM Diversity function between ON (Main and Sub are valid) and OFF (Fixed to Main).

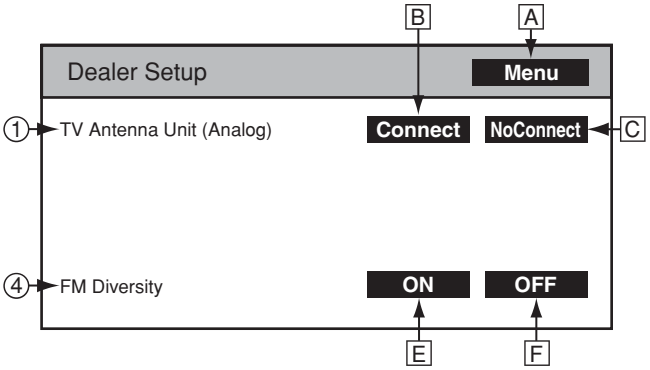

● Description of operations
1 TV Antenna connection setup (Analog) (Only for Japan destination)
4 FM Diversity (Only for 25T with Japan destination and Australia destination)
A Return to “Engineering Diag Menu (Page4)” screen.
B TV Antenna connection setup (Analog) (Connect setup key)
∗ This key and “TV Antenna connection setup (Analog) (NoConnect setup)” key have to be used exclusively. (Only for Japan destination)

TEST MODE

C TV Antenna connection setup (Analog) (NoConnect setup key)
∗ This key and “TV Antenna connection setup (Analog) (Connect setup)” key have to be used exclusively. (Only for Japan destination)

E FM Diversity function setup (ON) (Only for 25T with Japan destination and Australia destination)

F FM Diversity function setup (OFF) (Only for 25T with Japan destination and Australia destination)

■ Bluetooth Handefree Check Menu screen

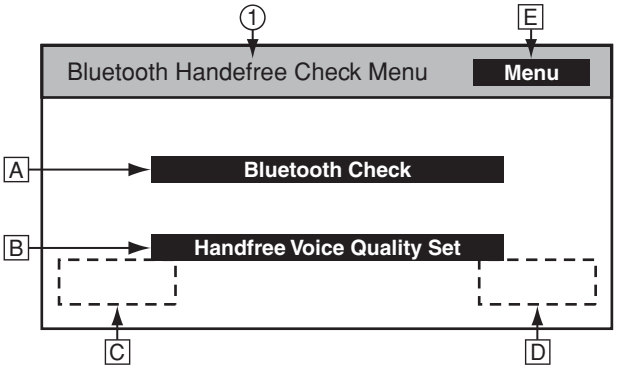

● Description of operations

1 Title

A Shift to “Bluetooth Check Menu” screen.

B Shift to “Handfree Voice Quality Set” screen. (Only in Japan model)

C Call Handsfree Lock No. Setup screen (Left) (Only for Japan model)

D Call Handsfree Lock No. Setup screen (Right) (Only for Japan model)

E Shift to “Engineering Diag Menu (Page4)” screen.

∗ Use the following order of sequence in touching the screen to shift “Handefree Security Code Set” screen: Left → Right → Left → Right.

■ Bluetooth Check Menu screen

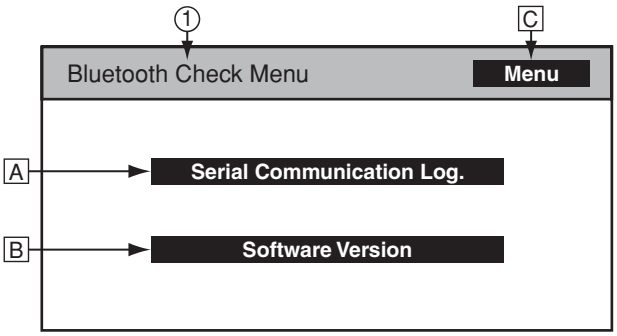

● Description of operations

1 Title

A Shift to “Serial Communication Log” screen.

B Shift to “Software Version” screen.

C Shift to “Bluetooth Handefree Check Menu” screen.

■ Serial Communication Log. screen

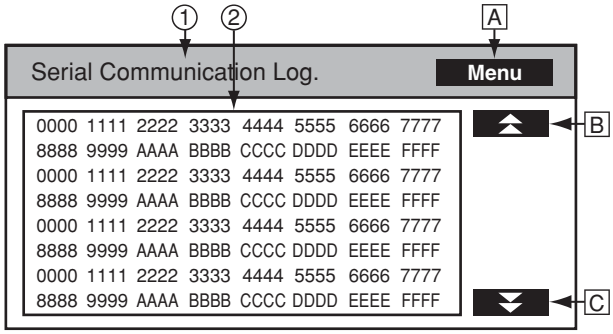

● Description of operations

1 Title

2 Dump list

A Shift to “Bluetooth Check Menu” screen.

B Display the preceding page.

C Display the succeeding page.

■ Software Version screen

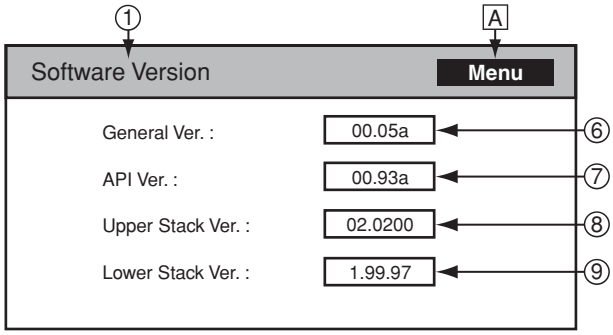

● Description of operations

1 Title

6 Integrated version

7 API Version

8 Upper Stack version

9 Lower Stack version

A Shift to “Bluetooth Check Menu” screen.

TEST MODE

■ Handfree Voice Quality Set screen

This screen is valid only in the Japan model.

The voice quality setup table switching function is not provided in both of all models.

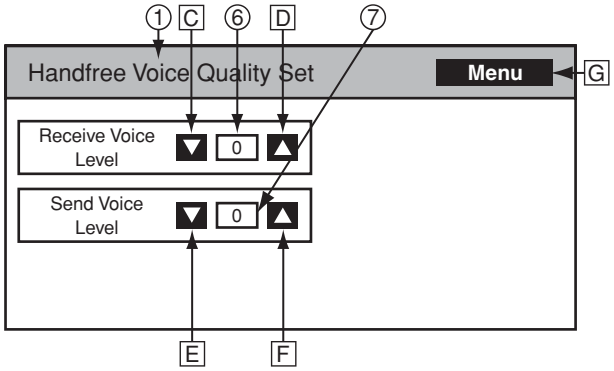

● Description of operations

1 Title
5 Description
6 Receive voice level
7 Send voice level
C Decrease the receive voice level.
D Increase the receive voice level.
E Decrease the send voice level.
F Increase the send voice level.
G Shift to “Bluetooth Handefree Check Menu” screen.

■ Handefree Security Code Set screen

This screen is valid only in the Japan model.

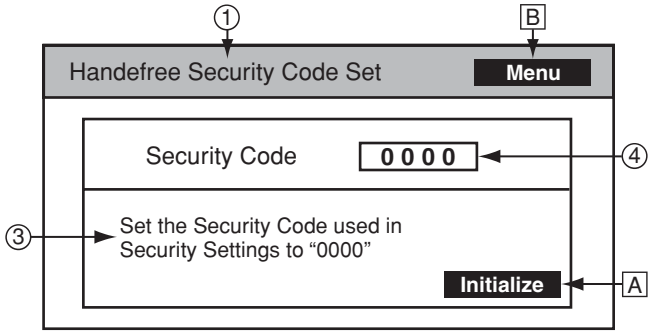

● Description of operations

1 Title
3 Description
4 Lock No.
A Initialize the lock No.
B Shift to “Bluetooth Handefree Check Menu” screen.

ADJUSTMENT

● X05-615

Item	Adjustment Method and Adjustment Values	Conditions
1. Check power supply voltage	① Check output voltage at the power supply unit. TP119: 8.0±0.16V	• No signal: Can use RF signal of 9CH, color bar and 70dBμ
2. Adjustment of diversity free-run frequency VR100	① Connect the frequency counter between TP121 and TP124 (GND) ② Make connection between TP122 and TP124 (GND) ③ Tune VR100 to set the frequency to 15.734±0.1kHz ④ Reset TP122 to “OPEN” after the tuning	• Antenna input = No signal • Frequency counter
3. TV and Stereo Adjustment of separation VR300	① Apply TV antenna input terminal the 9ch color bar and RF signal of 70dBμ ② Set the voice modulation frequency to 1kHz, the modulation frequency shift to ±25kHz and the mode only to stereo Rch ③ Connect the oscilloscope to TP305 and TP311 (GND) and tune the VR300 to get the minimum output amplitude	• TV signal generator • TV audio multiple signal generator
4. TV S-meter adjustment VR302	① Apply TV antenna input terminal the 9ch color bar and RF signal of 30dBμ ② Audio signal shall not be modulated ③ Connect the DC voltmeter between TP312 and TP313 (GND) and tune VR302 to get 1.80±0.05V	• 30dBμ shall be measured with the terminal impedance of 75Ω • PS ratio = 6dB • TV signal generator

PC BOARD (COMPONENT SIDE VIEW)

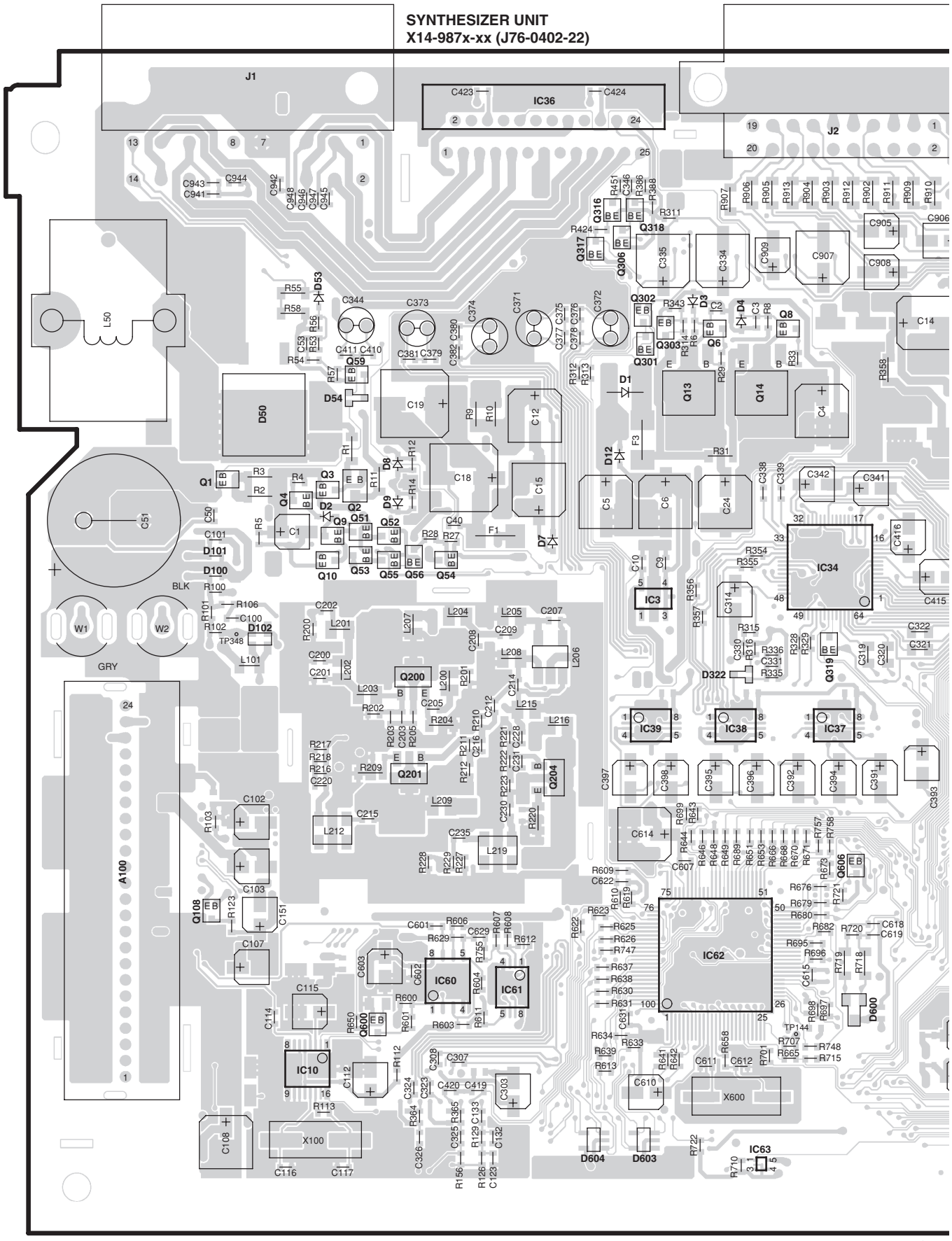

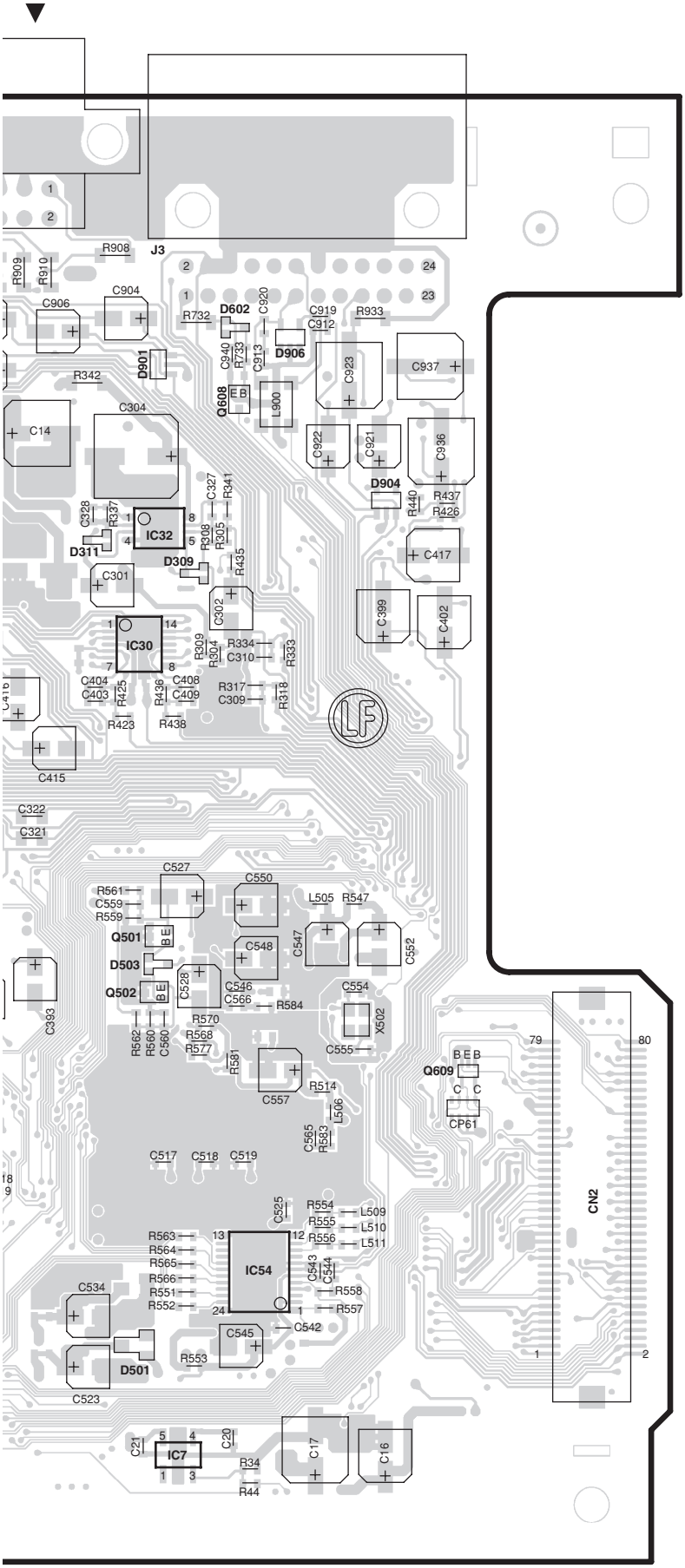

X14-987x-xx

Ref. No.	Address	Ref. No.	Address
IC3	4D	Q14	3E
IC7	7F	Q51	4C
IC10	6B	Q52	4C
IC32	3F	Q53	4C
IC34	4E	Q54	4C
IC36	2D	Q55	4C
IC37	5E	Q56	4C
IC38	5D	Q59	3C
IC39	5D	Q108	6B
IC62	6D	Q301	3D
IC63	7E	Q302	3D
Q1	4B	Q303	3D
Q2	4C	Q306	2D
Q3	3B	Q316	2D
Q4	4B	Q317	2D
Q6	3D	Q318	2D
Q8	3E	Q319	4E
Q9	4C	Q501	5F
Q10	4B	Q502	5F
Q13	3D	Q606	5E

Refer to the schematic diagram for the values of resistors and capacitors.

PC BOARD (FOIL SIDE VIEW)

SYNTHESIZER UNIT
X14-987x-xx (J76-0402-22)

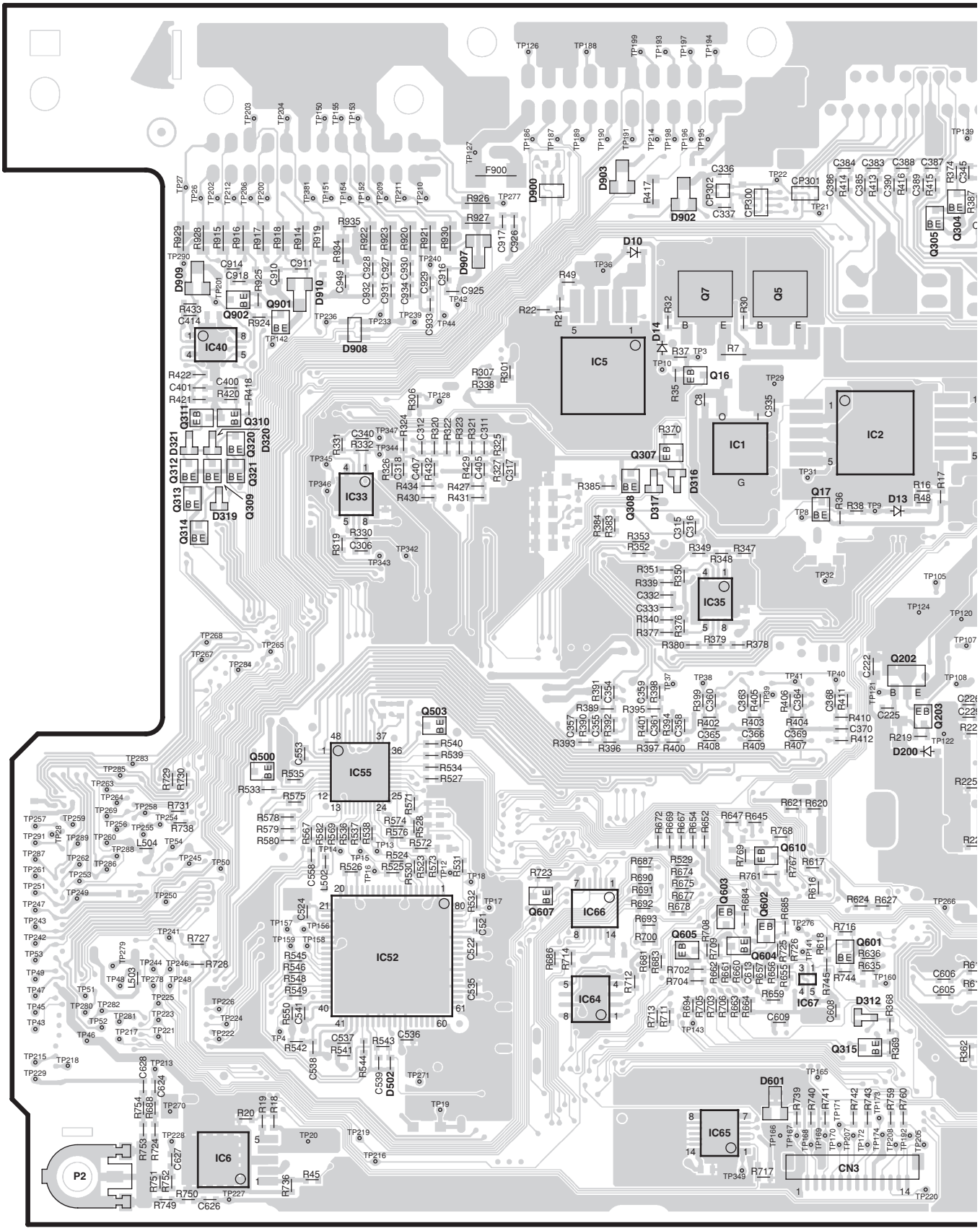

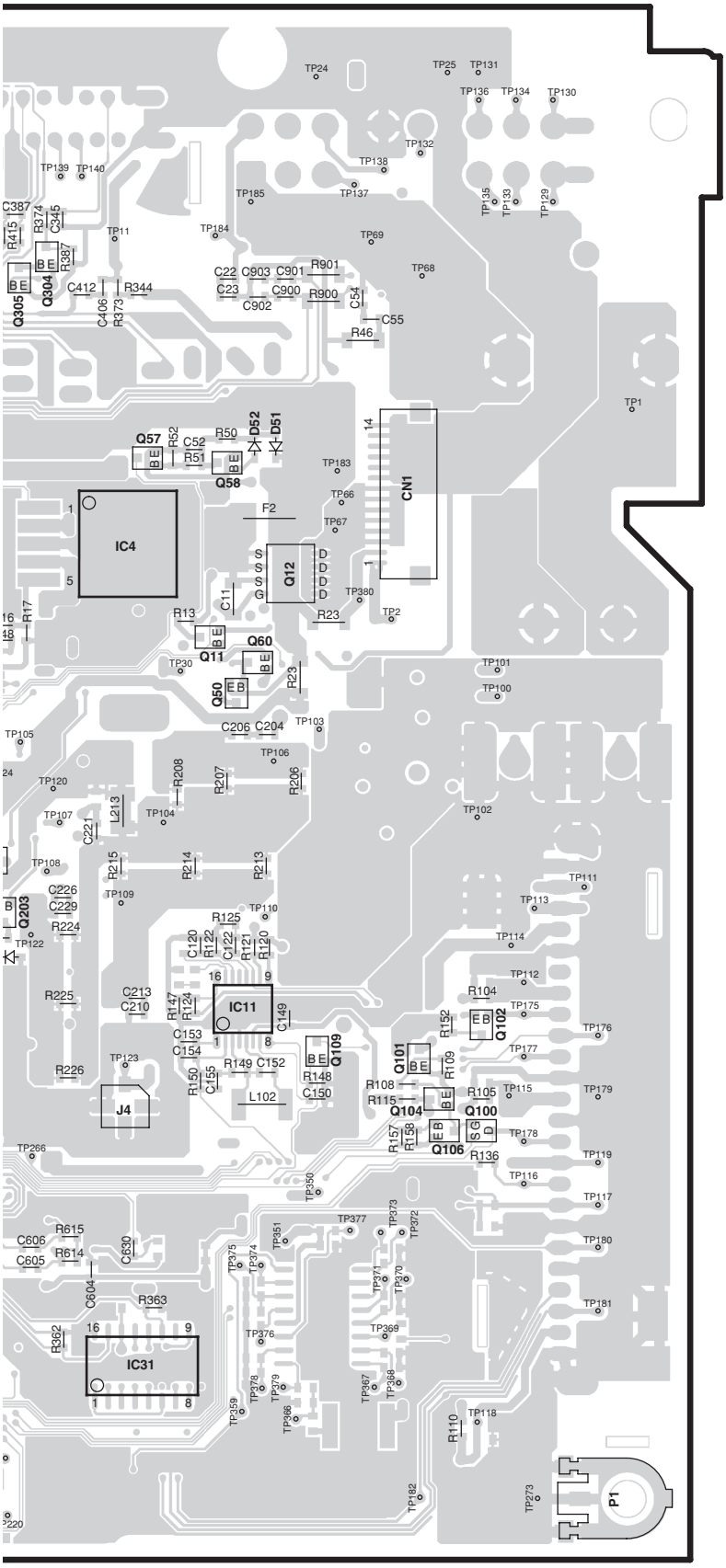

X14-987x-xx

Ref. No.	Address	Ref. No.	Address
IC1	3N	Q102	5Q
IC2	3O	Q104	5Q
IC4	3P	Q106	6Q
IC5	3N	Q109	5Q
IC6	7L	Q304	2P
IC11	5P	Q305	3O
IC31	6P	Q307	4N
IC35	4N	Q308	4N
IC40	3L	Q309	4L
IC52	6M	Q310	3L
IC55	5M	Q311	3L
IC64	6N	Q312	4L
IC65	7N	Q313	4L
IC66	6N	Q314	4L
IC67	6O	Q315	6O
Q5	3O	Q320	3L
Q7	3N	Q321	4L
Q11	4P	Q500	5L
Q12	4Q	Q503	5M
Q16	3N	Q601	6O
Q17	4O	Q602	6N
Q50	4P	Q603	6N
Q57	3P	Q604	6N
Q58	3P	Q605	6N
Q60	4P	Q607	6M
Q100	5Q	Q901	3L
Q101	5Q	Q902	3L

Refer to the schematic diagram for the values of resistors and capacitors.

PC BOARD (COMPONENT SIDE VIEW)

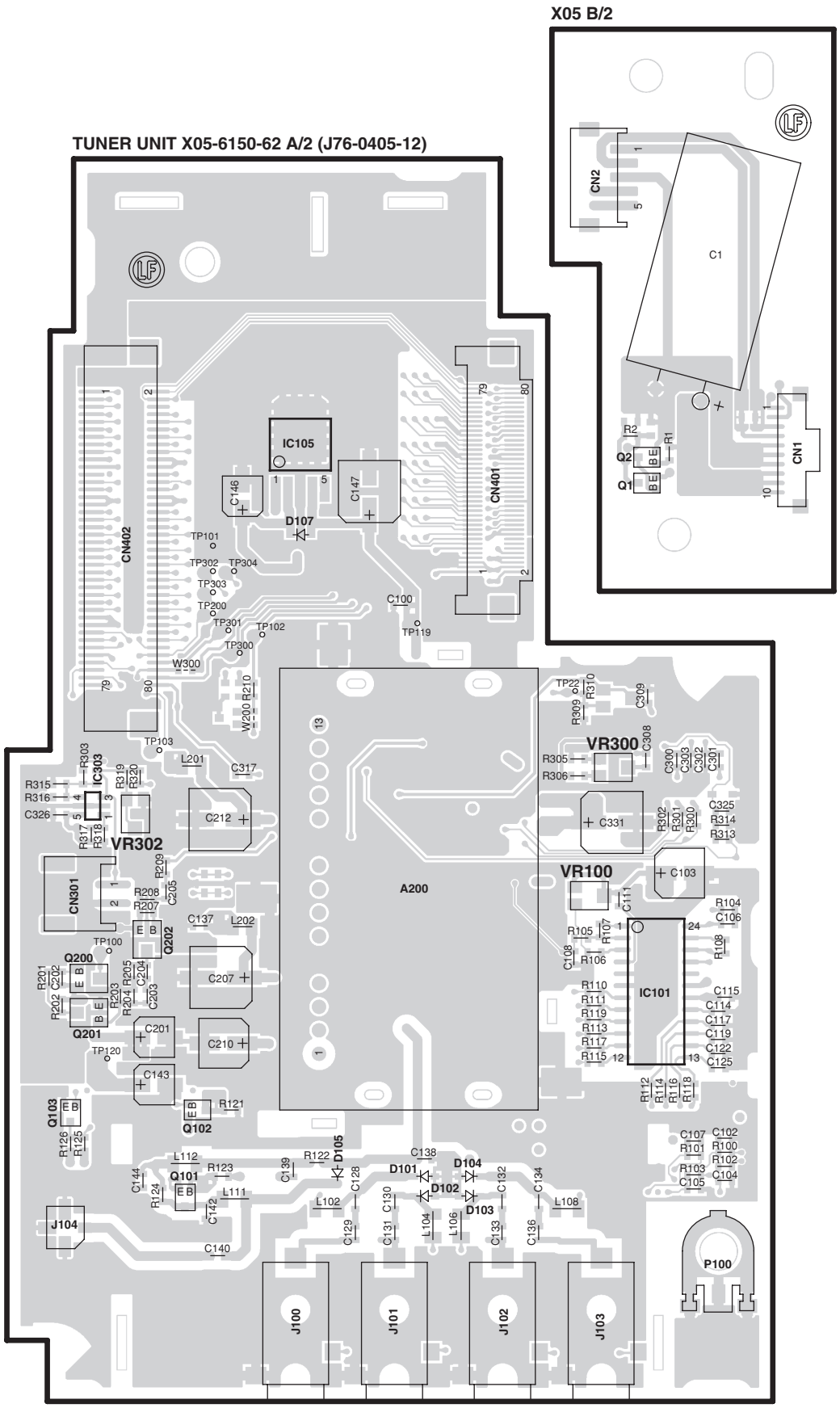

X05-6150-62

Ref. No.	Address
Q1	3X
Q2	3X

Refer to the schematic diagram for the values of resistors and capacitors.

PC BOARD (FOIL SIDE VIEW)

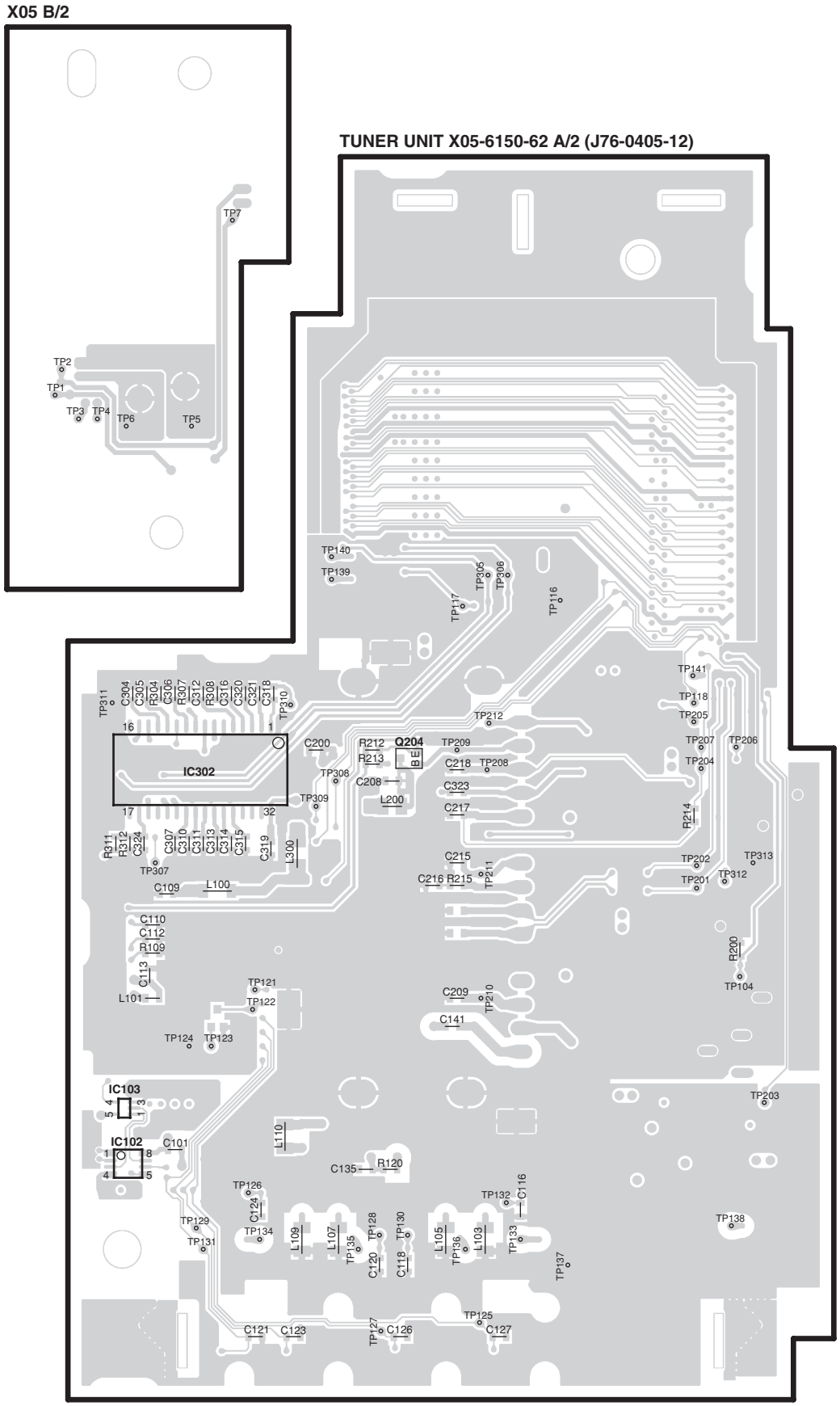

Refer to the schematic diagram for the values of resistors and capacitors.

PC BOARD (COMPONENT SIDE VIEW)

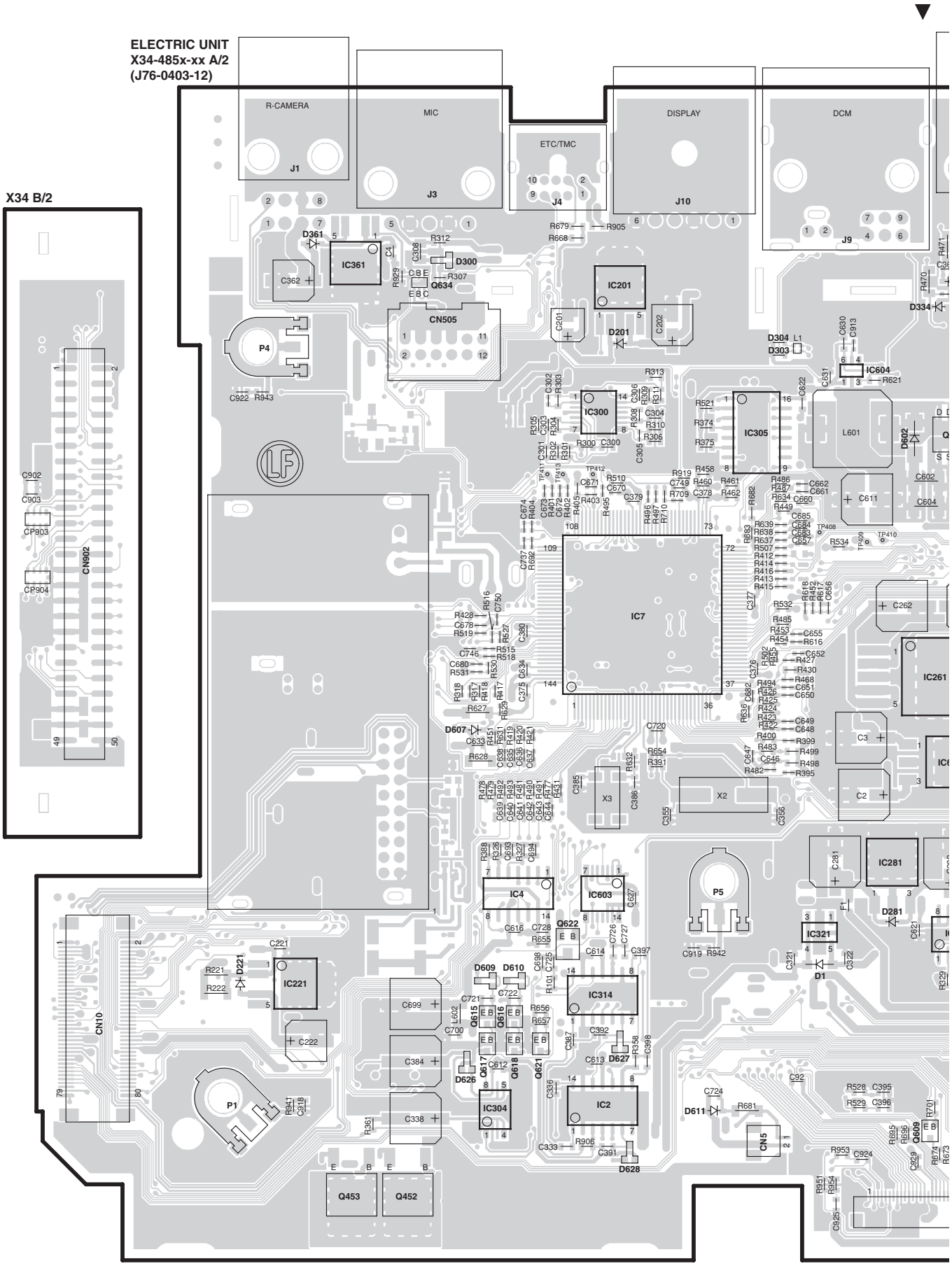

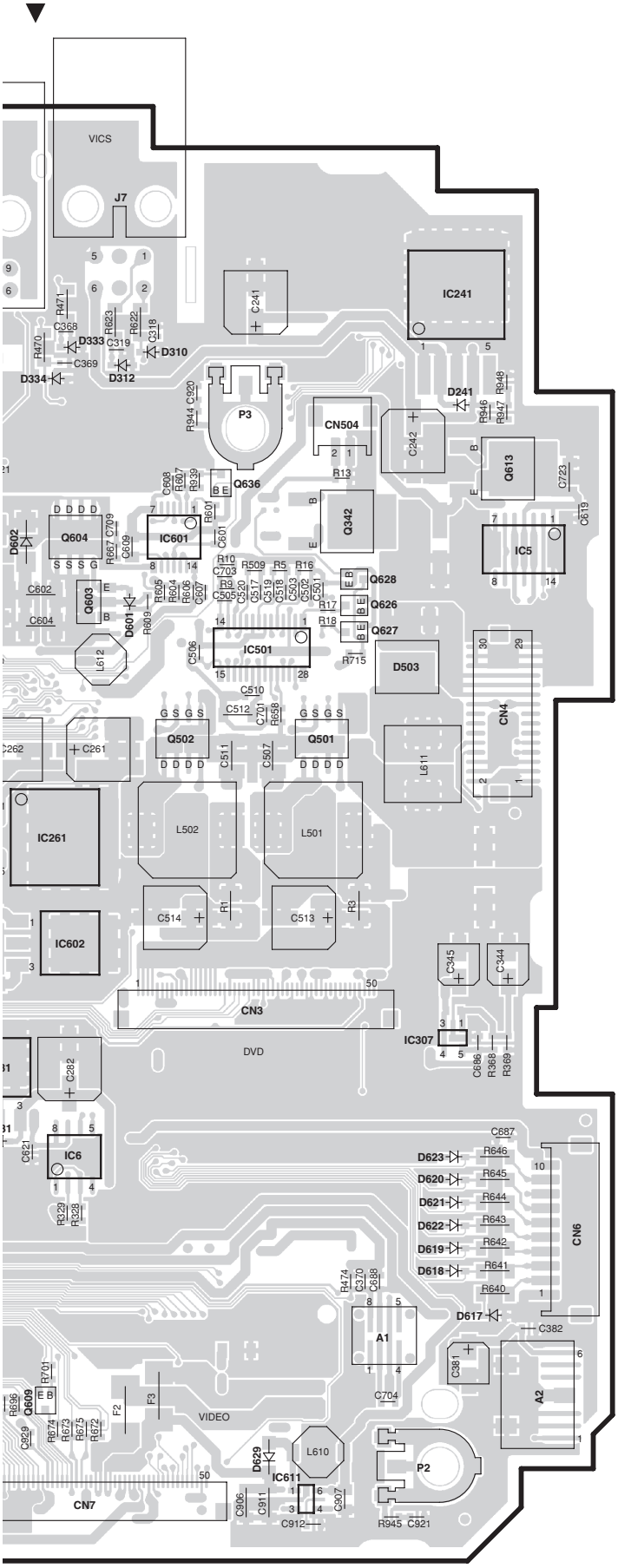

X34-485x-xx

Ref. No.	Address	Ref. No.	Address
IC2	6AH	Q452	7AG
IC4	5AG	Q453	7AG
IC6	6AJ	Q501	4AK
IC7	4AH	Q502	4AJ
IC201	2AH	Q603	3AJ
IC261	4AJ	Q604	3AJ
IC281	5AI	Q609	6AI
IC300	3AH	Q615	6AG
IC304	6AG	Q616	6AG
IC305	3AI	Q617	6AG
IC307	5AK	Q618	6AG
IC314	6AH	Q621	6AH
IC321	6AI	Q622	5AH
IC361	2AG	Q626	3AK
IC501	4AJ	Q627	4AK
IC601	3AJ	Q628	3AK
IC603	5AH	Q634	2AG
IC611	7AK	Q636	3AJ
Q342	3AK		

Refer to the schematic diagram for the values of resistors and capacitors.

FZDA07ELEF2/EREF2/MRHF2

PC BOARD (FOIL SIDE VIEW)

ELECTRIC UNIT
X34-485x-xx A/2
(J76-0403-12)

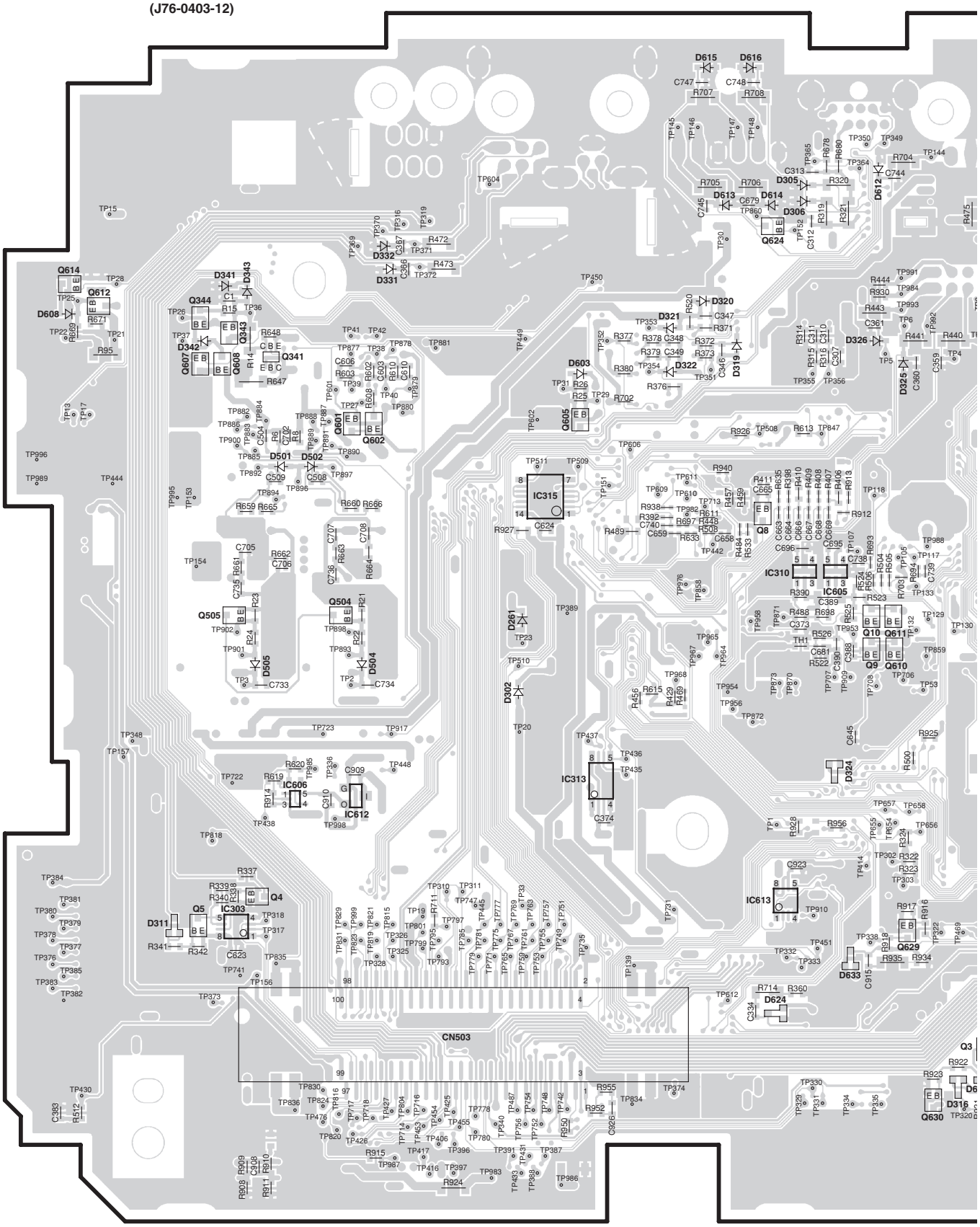

▼

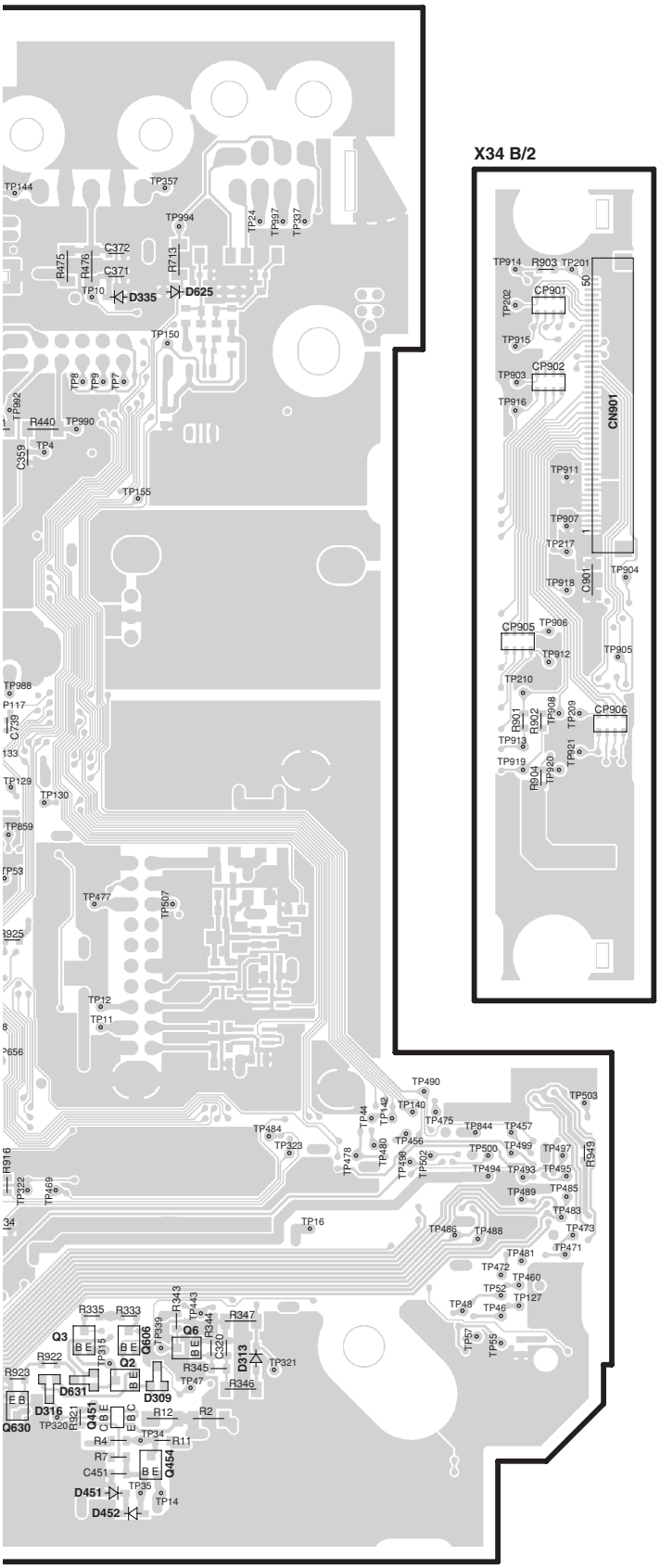

▲

X34-485x-xx

Ref. No.	Address	Ref. No.	Address
IC310	4AS	Q451	7AT
IC313	5AR	Q454	7AT
IC315	4AQ	Q504	4AQ
IC605	4AS	Q505	4AP
IC606	5AP	Q601	3AP
IC612	5AQ	Q602	3AQ
Q2	6AT	Q605	3AR
Q3	6AT	Q606	6AT
Q6	6AT	Q607	3AP
Q8	4AR	Q608	3AP
Q9	4AS	Q610	4AS
Q10	4AS	Q611	4AS
Q341	3AP	Q624	3AS
Q343	3AP	Q629	6AS
Q344	3AP	Q630	7AS

Refer to the schematic diagram for the values of resistors and capacitors.

PC BOARD (COMPONENT SIDE VIEW)

SWITCH UNIT X34-553x-xx (J76-0444-11)

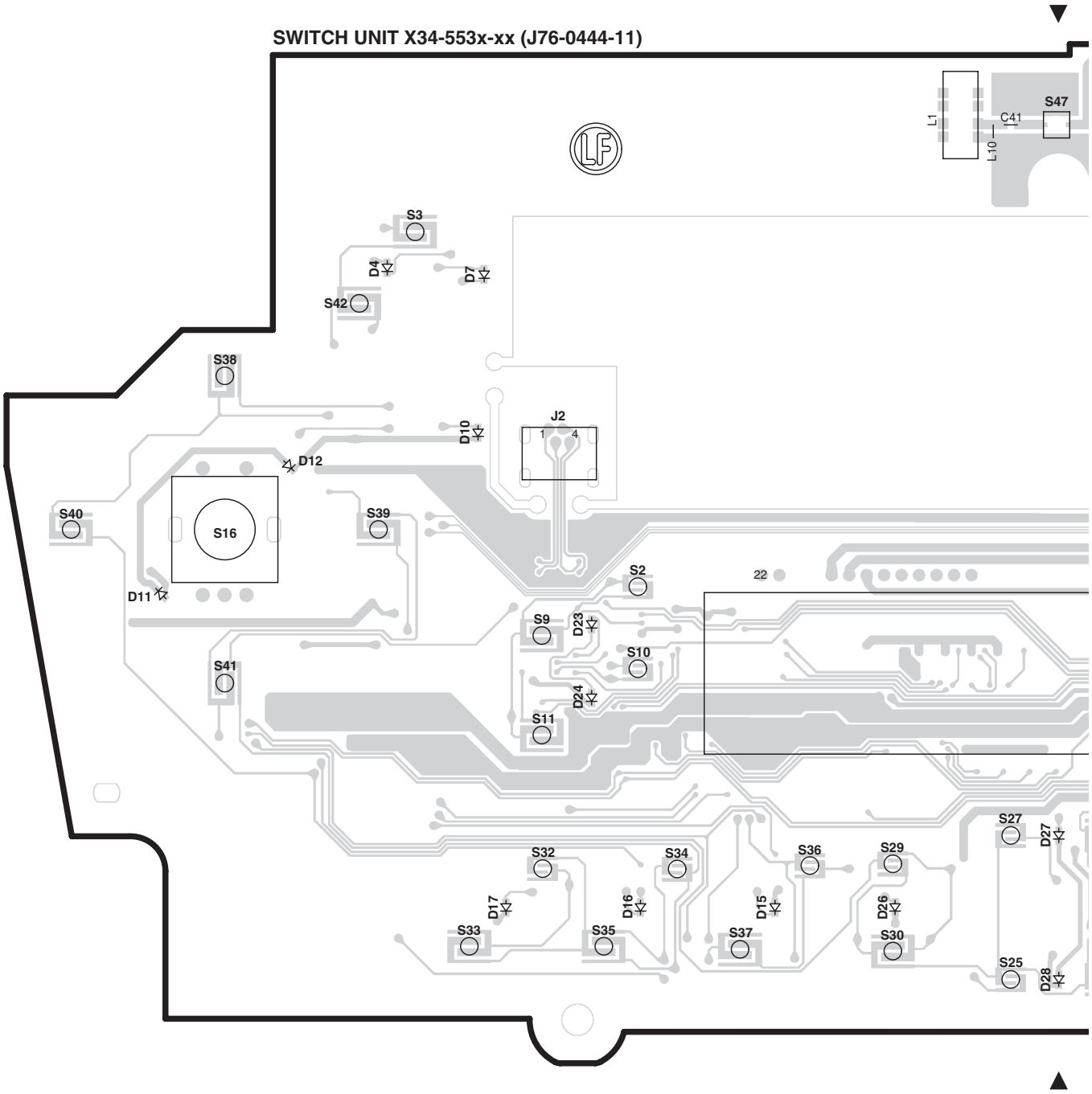

FZDA07ELEF2/EREF2/MRHF2

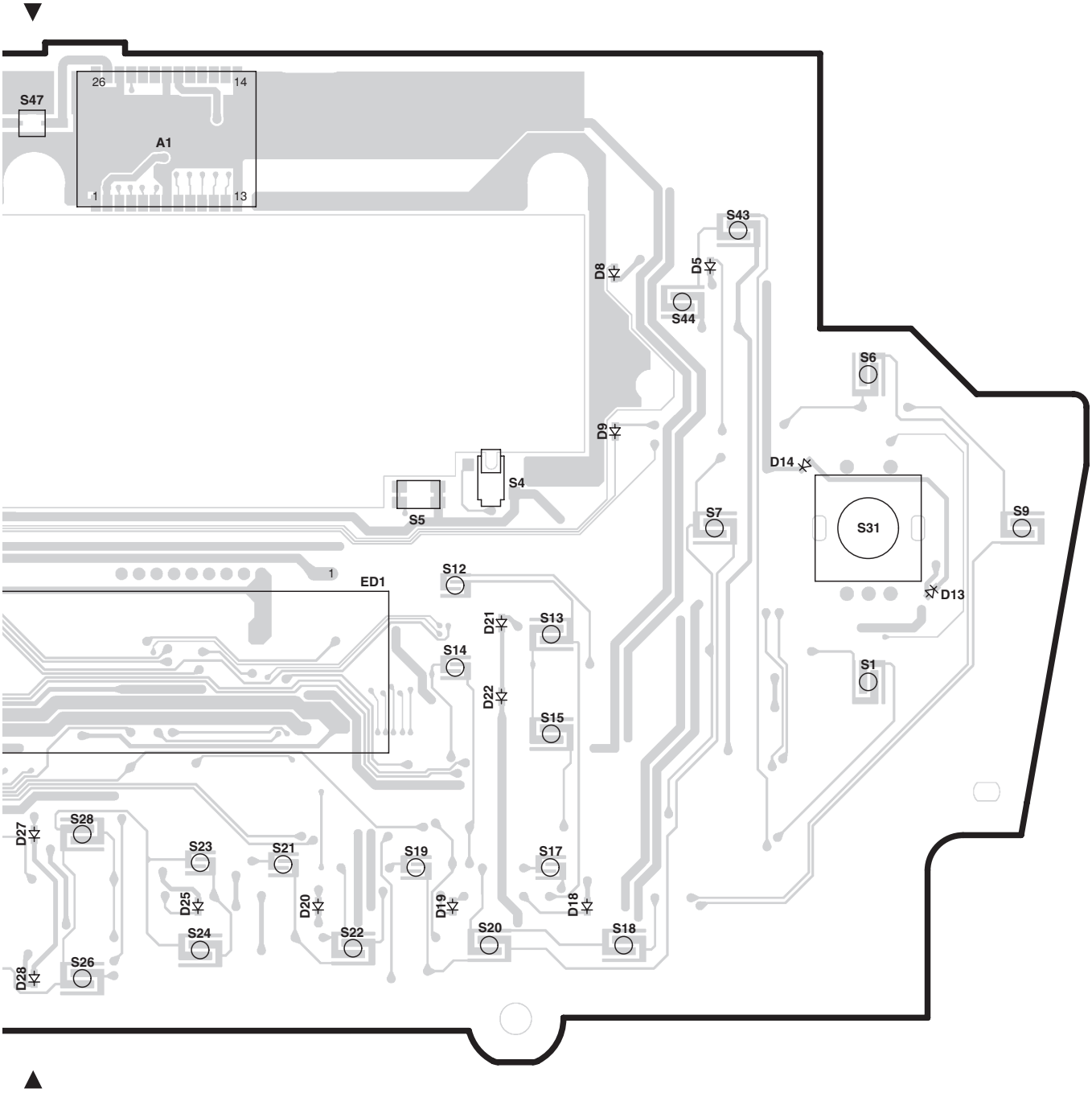

Refer to the schematic diagram for the values of resistors and capacitors.

PC BOARD (FOIL SIDE VIEW)

SWITCH UNIT X34-553x-xx (J76-0444-11)

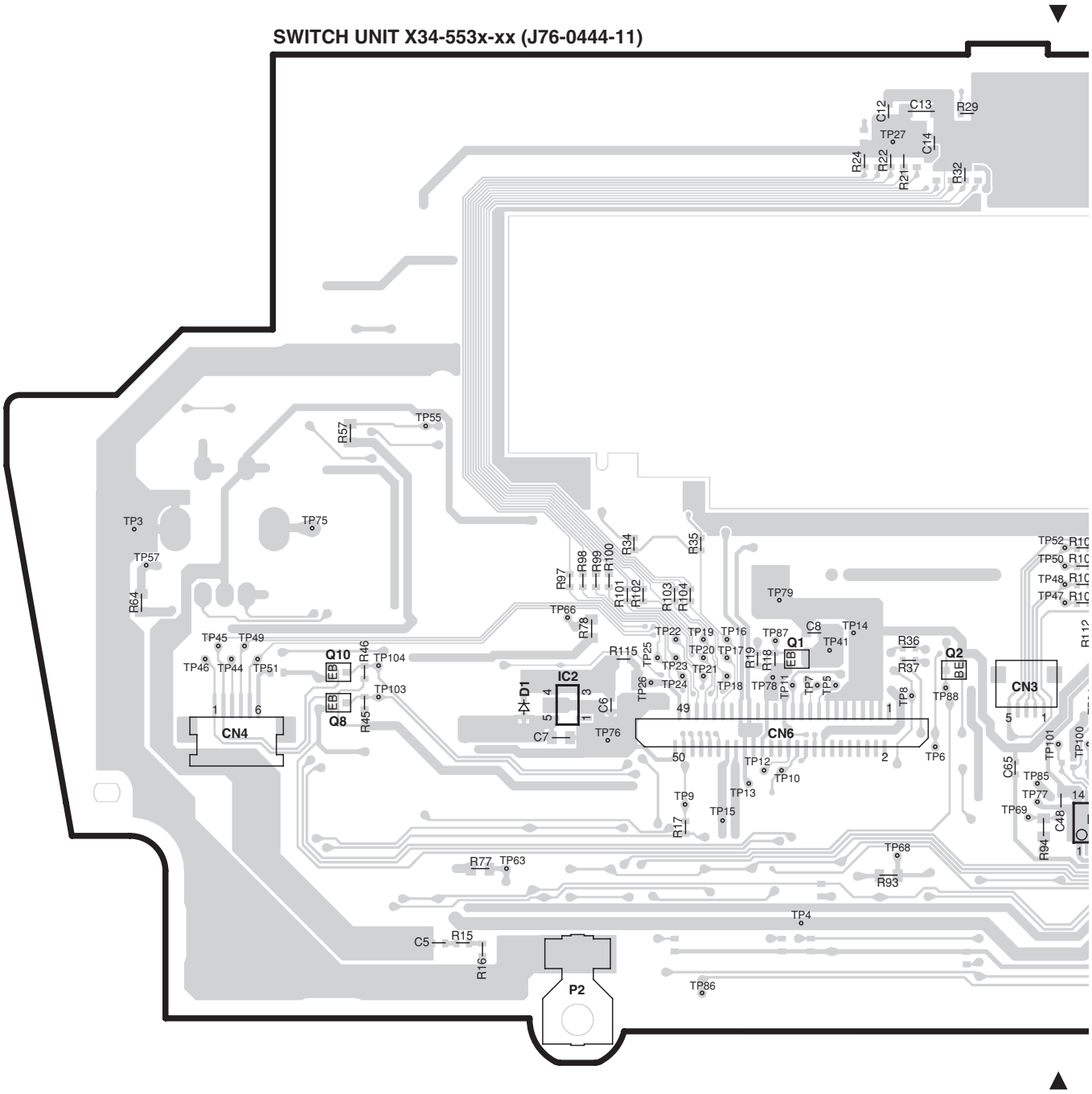

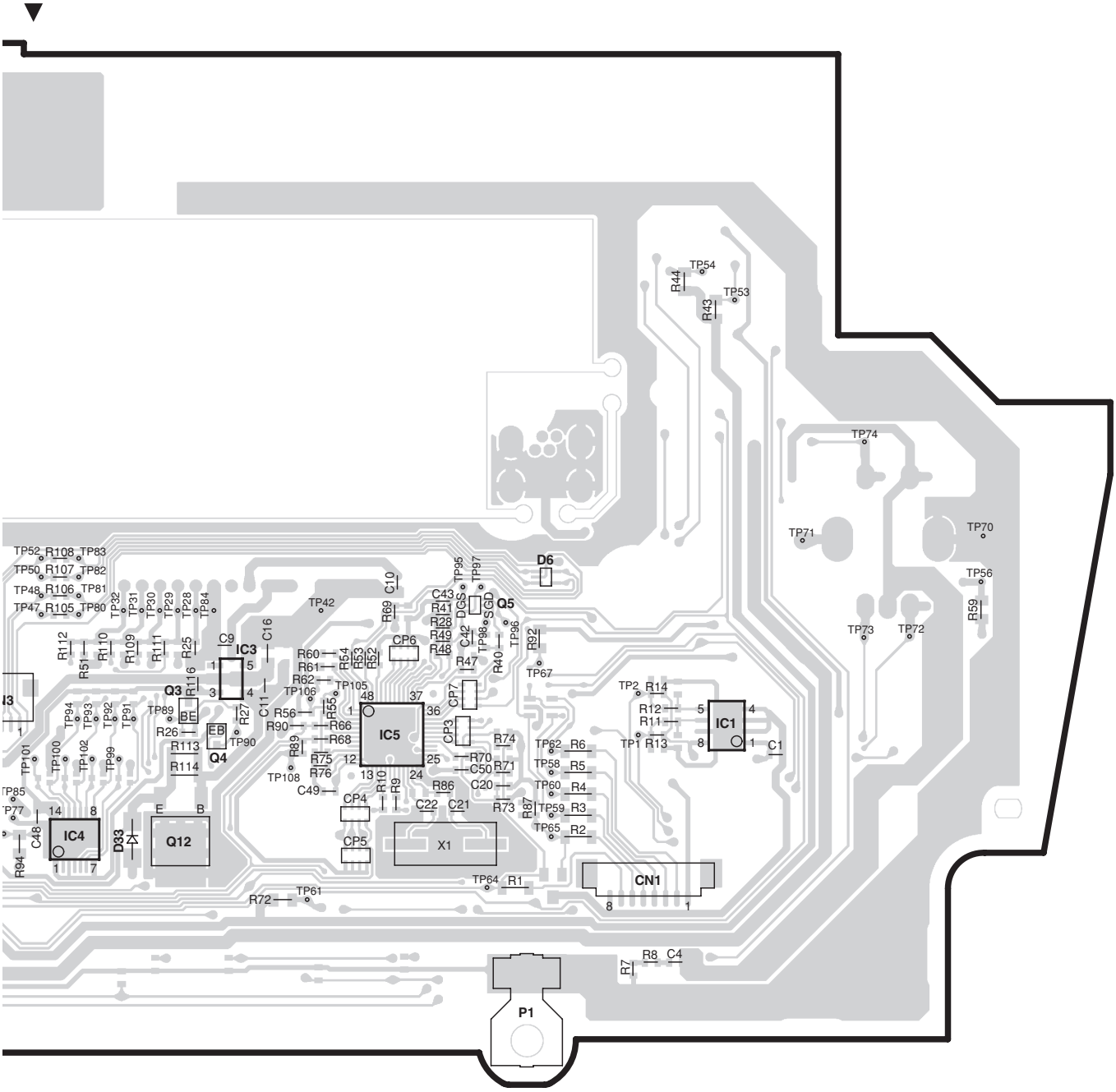

X34-553x-xx

Ref. No.	Address	Ref. No.	Address
IC1	4BP	Q2	4BM
IC2	4BK	Q3	4BN
IC3	4BN	Q4	4BN
IC4	5BN	Q5	4BP
IC5	4BO	Q8	4BJ
Q1	4BL	Q10	4BJ

Refer to the schematic diagram for the values of resistors and capacitors.

PC BOARD (COMPONENT SIDE VIEW)

SWITCH UNIT
X34-405x-xx (J74-1712-12)

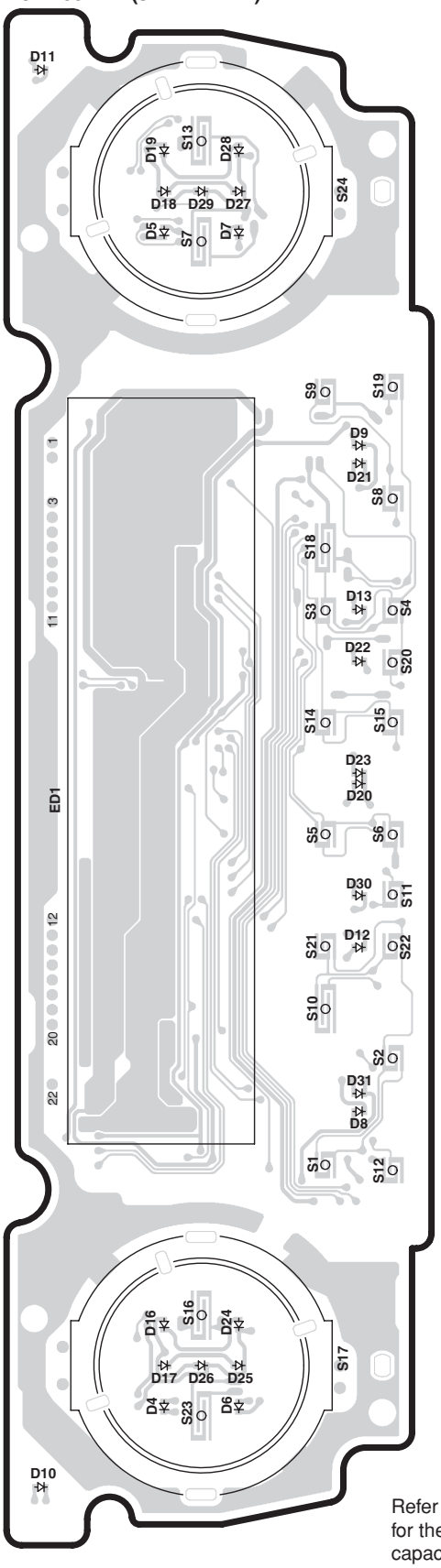

(FOIL SIDE VIEW)

SWITCH UNIT
X34-405x-xx (J74-1712-12)

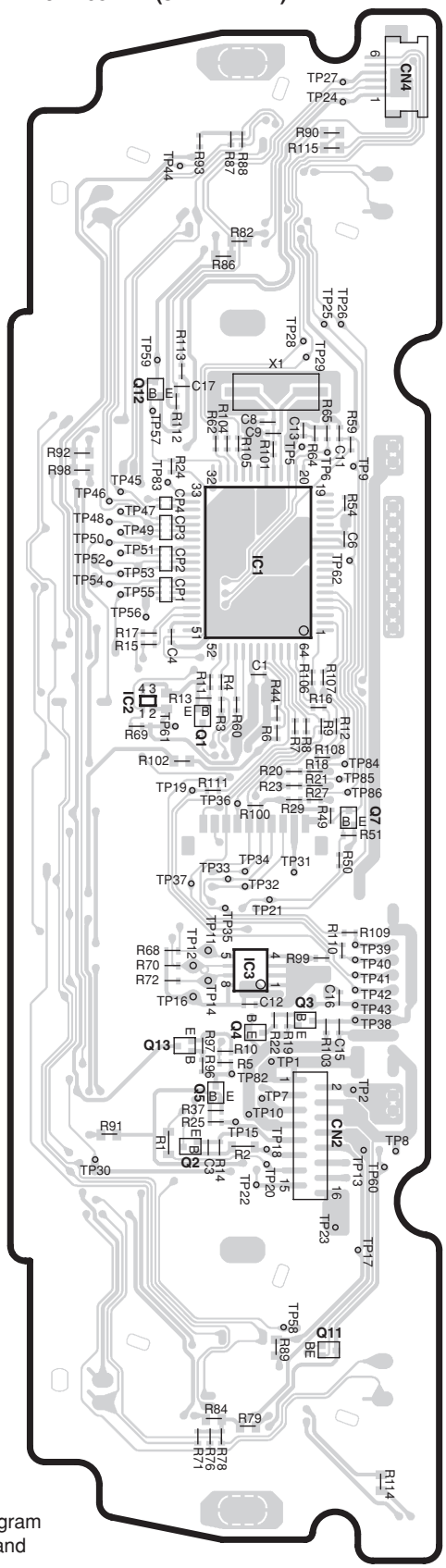

X34-405x-xx

Ref. No.	Address
IC1	3BV
IC2	4BV
IC3	5BV
Q1	4BV
Q2	6BV
Q3	5BV
Q4	5BV
Q5	5BV
Q7	4BW
Q11	6BV
Q12	3BV
Q13	5BV

Refer to the schematic diagram for the values of resistors and capacitors.

PC BOARD (FOIL SIDE VIEW)

POWER SUPPLY UNIT X00-4100-00 (J74-1713-02)

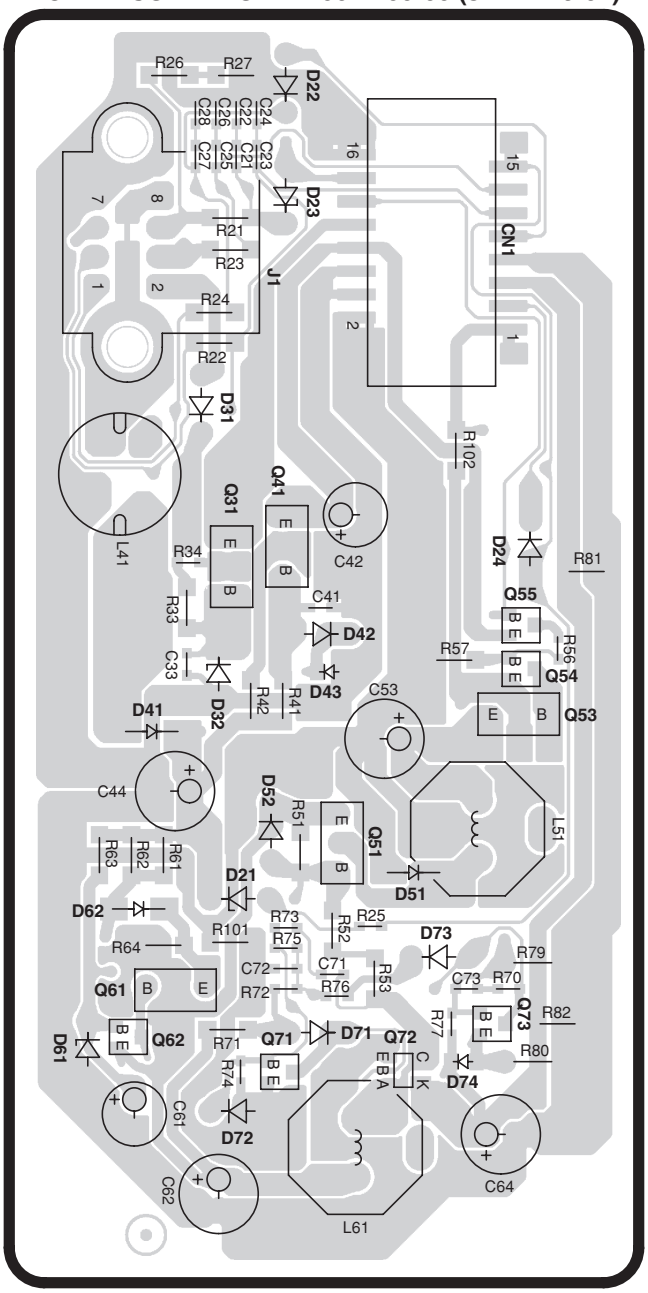

X00-4100-00

Ref. No.	Address
Q31	3BY
Q41	3BZ
Q51	4BZ
Q53	4CA
Q54	4CA
Q55	3BZ
Q61	5BY
Q62	5BY
Q71	5BZ
Q72	5BZ
Q73	5BZ

Refer to the schematic diagram for the values of resistors and capacitors.

PC BOARD (COMPONENT SIDE VIEW)

DVD UNIT X37-1100-00 (J76-0160-22)

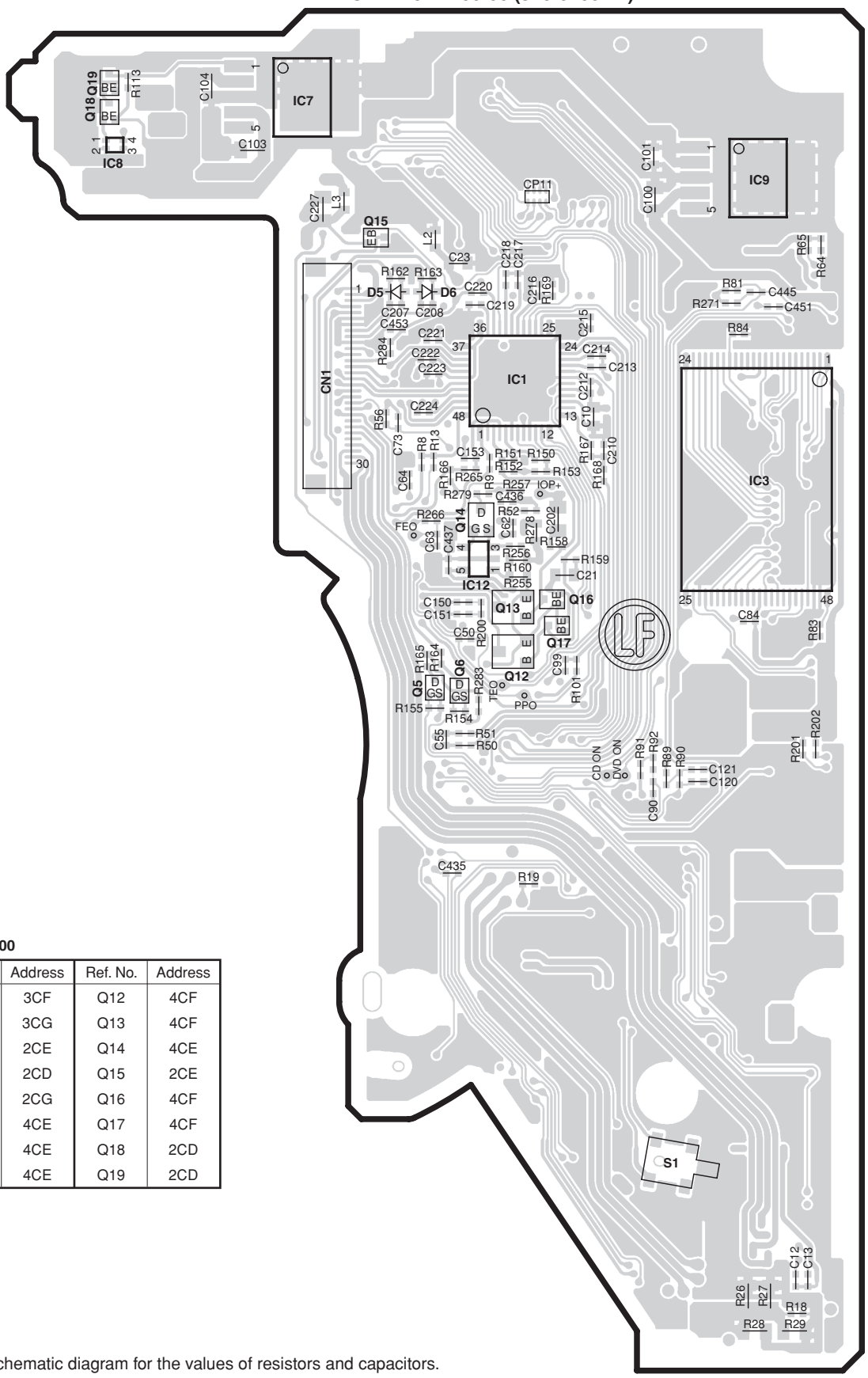

X37-1100-00

Ref. No.	Address	Ref. No.	Address
IC1	3CF	Q12	4CF
IC3	3CG	Q13	4CF
IC7	2CE	Q14	4CE
IC8	2CD	Q15	2CE
IC9	2CG	Q16	4CF
IC12	4CE	Q17	4CF
Q5	4CE	Q18	2CD
Q6	4CE	Q19	2CD

Refer to the schematic diagram for the values of resistors and capacitors.

PC BOARD (FOIL SIDE VIEW)

DVD UNIT X37-1100-00 (J76-0160-22)

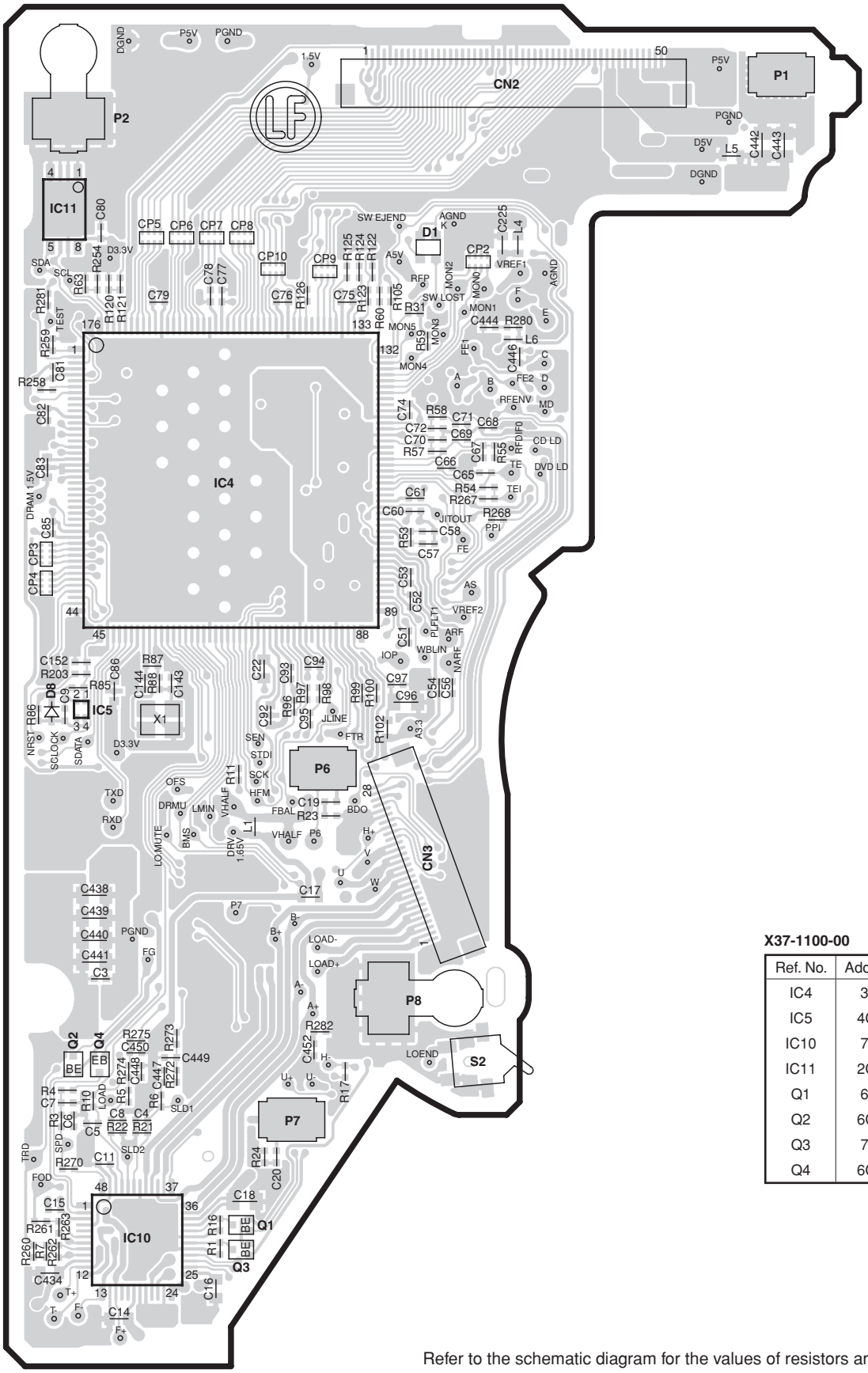

X37-1100-00

Ref. No.	Address
IC4	3CI
IC5	4CH
IC10	7CI
IC11	2CH
Q1	6CI
Q2	6CH
Q3	7CI
Q4	6CH

Refer to the schematic diagram for the values of resistors and capacitors.

PC BOARD (COMPONENT SIDE VIEW)

DVD UNIT X37-1120-02 (J76-0162-22)

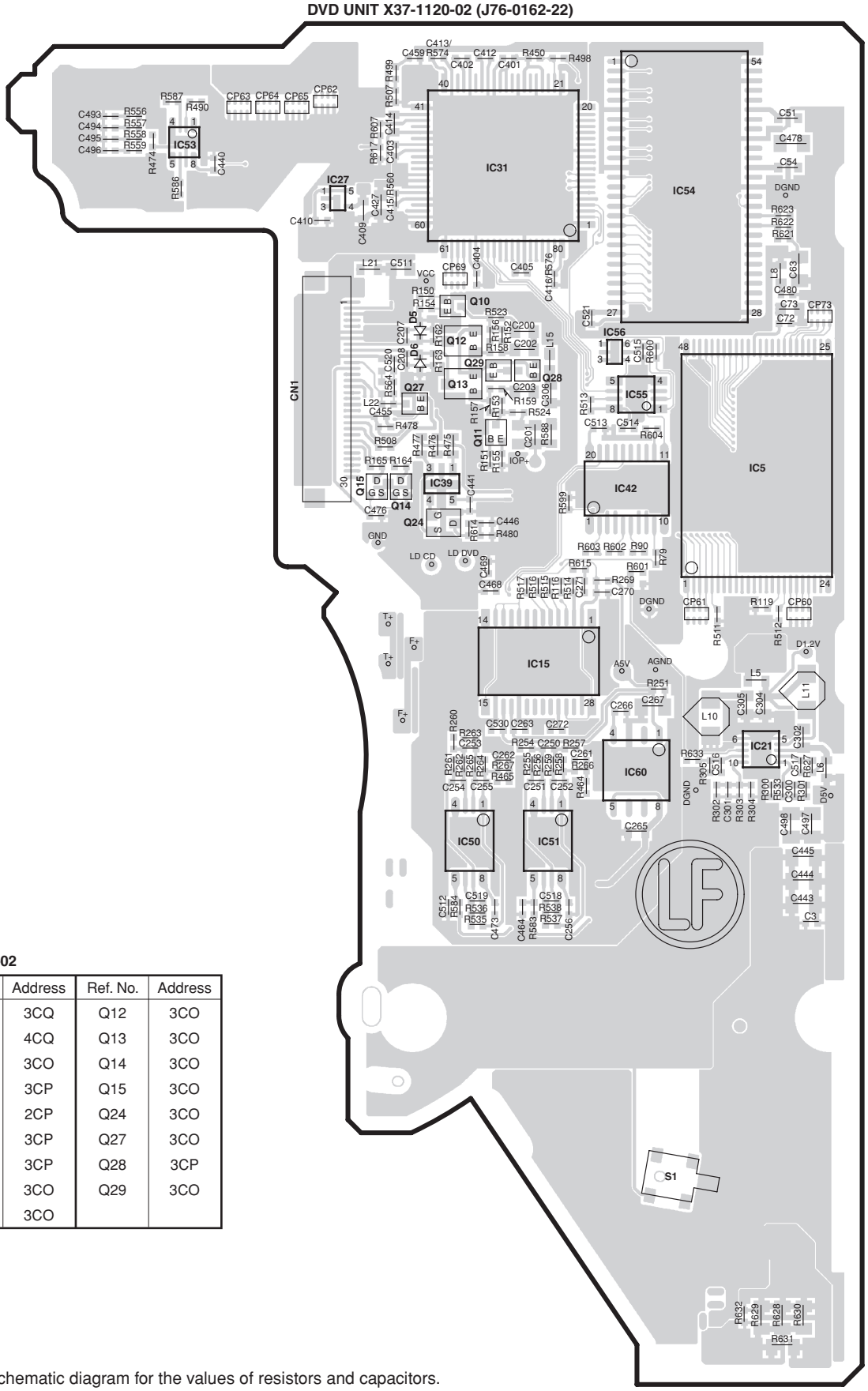

X37-1120-02

Ref. No.	Address	Ref. No.	Address
IC5	3CQ	Q12	3CO
IC21	4CQ	Q13	3CO
IC39	3CO	Q14	3CO
IC42	3CP	Q15	3CO
IC54	2CP	Q24	3CO
IC55	3CP	Q27	3CO
IC56	3CP	Q28	3CP
Q10	3CO	Q29	3CO
Q11	3CO		

Refer to the schematic diagram for the values of resistors and capacitors.

PC BOARD (FOIL SIDE VIEW)

DVD UNIT X37-1120-02 (J76-0162-22)

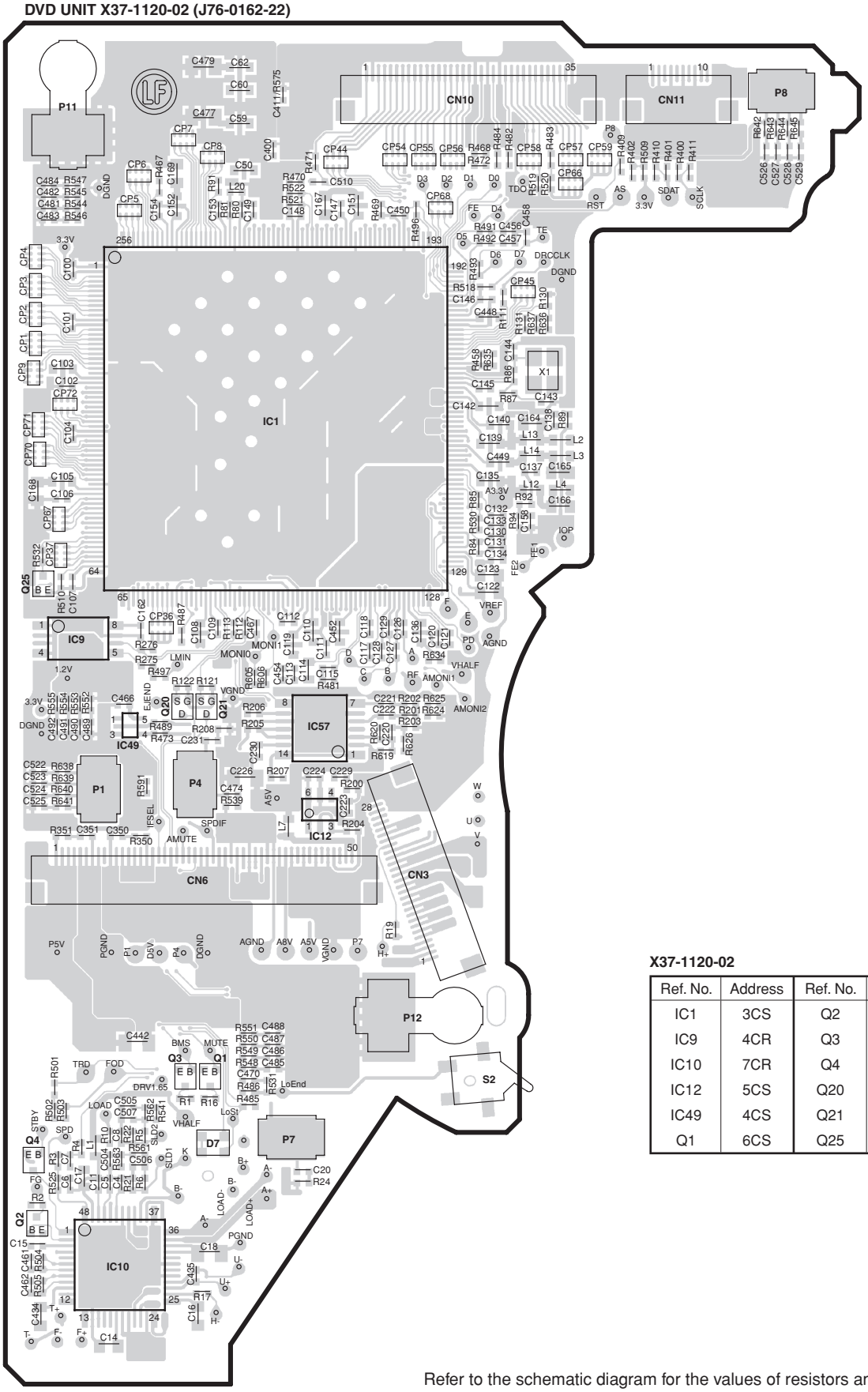

X37-1120-02

Ref. No.	Address	Ref. No.	Address
IC1	3CS	Q2	6CR
IC9	4CR	Q3	6CS
IC10	7CR	Q4	6CR
IC12	5CS	Q20	4CS
IC49	4CS	Q21	4CS
Q1	6CS	Q25	4CR

Refer to the schematic diagram for the values of resistors and capacitors.

INTERCONNECTION DIAGRAM

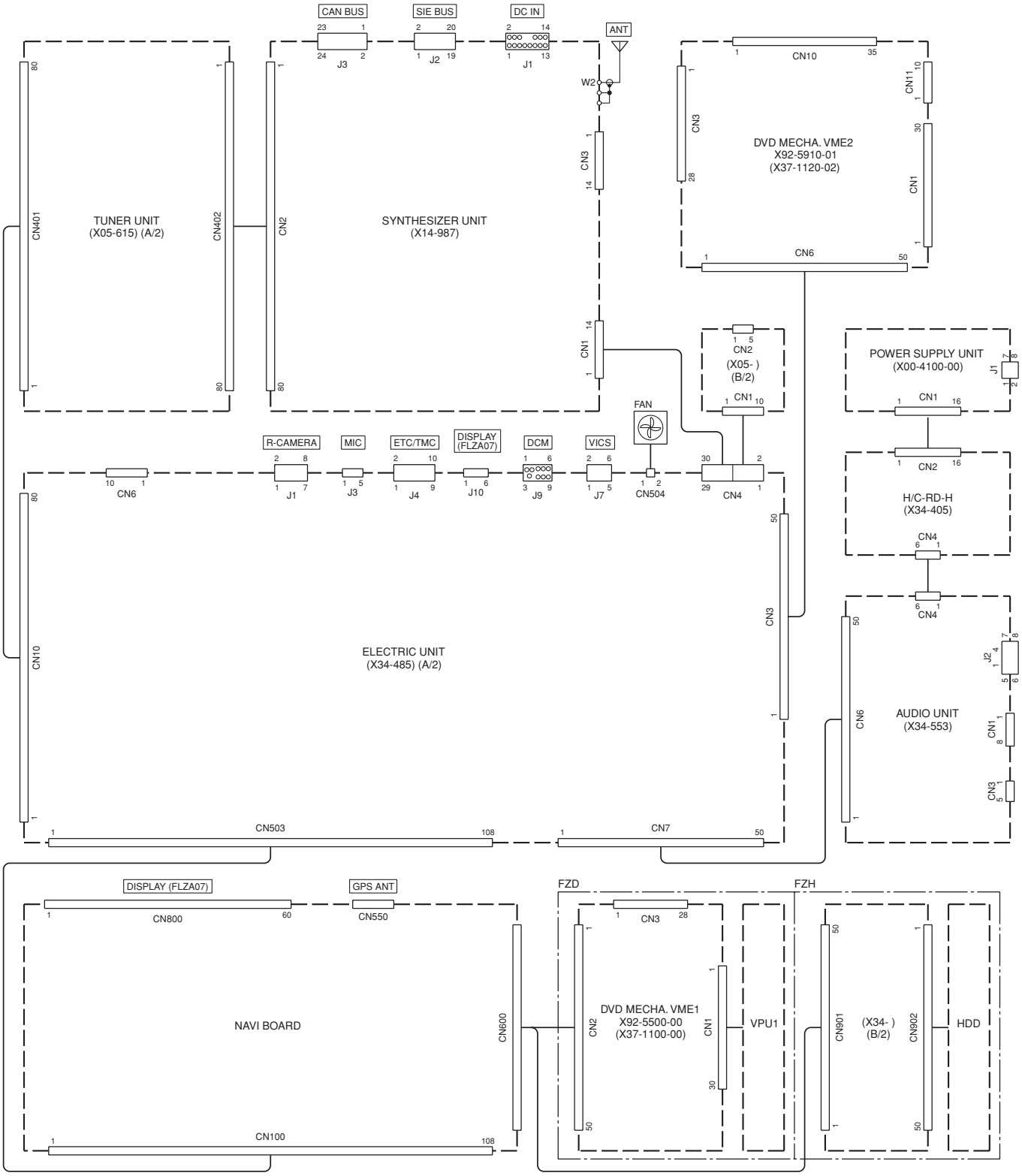

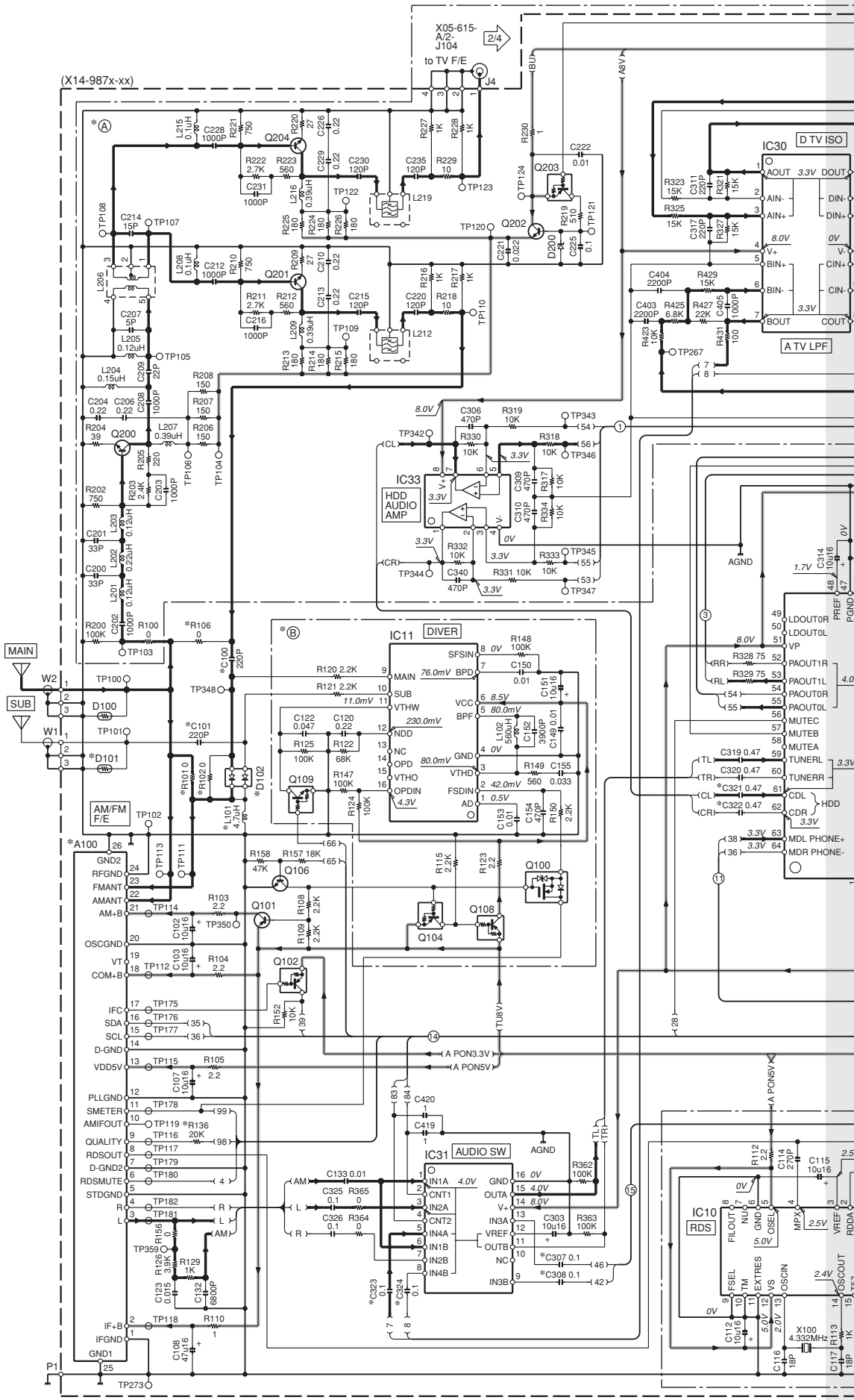
(X14-987x-xx)
X05-615-A/2-J104
to TV F/E
J4
IC30
D TV ISO
A TV LPF
IC33
HDD AUDIO AMP
IC11
DIVER
IC31
AUDIO SW
IC10
RDS
MAIN
SUB
AM/FM F/E
AGND
Q200
Q201
Q204
Q203
Q202
Q100
Q101
Q102
Q104
Q106
Q108
Q109
D100
D200
D101
D102
X100 4.332MHz
P1

FZDA07ELEF2/EREF2/MRHF2

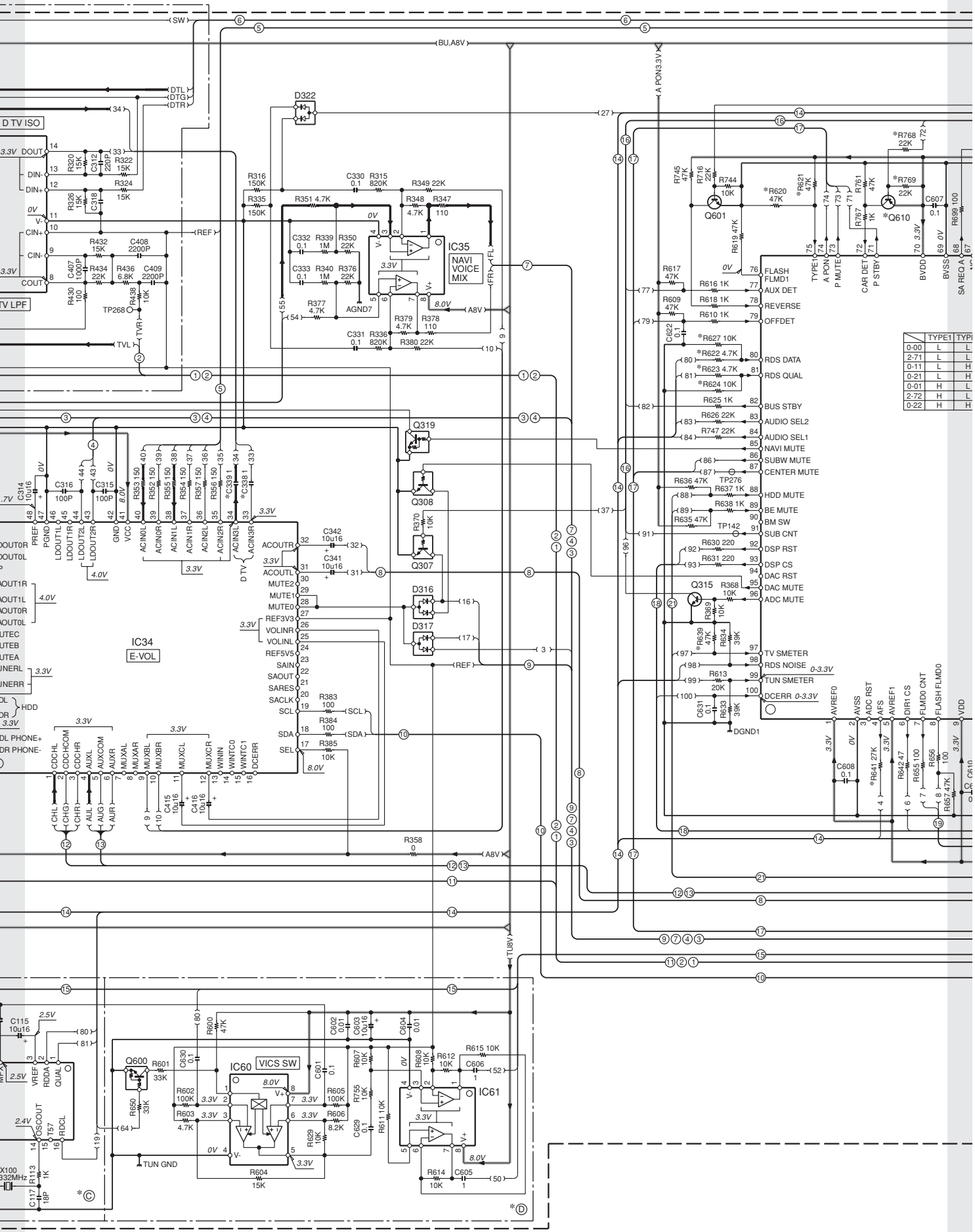

	TYPE1	TYPE
0-00	L	L
2-71	L	L
0-11	L	H
0-21	L	H
0-01	H	L
2-72	H	L
0-22	H	H

FZDA07ELEF2/EREF2/MRHF2

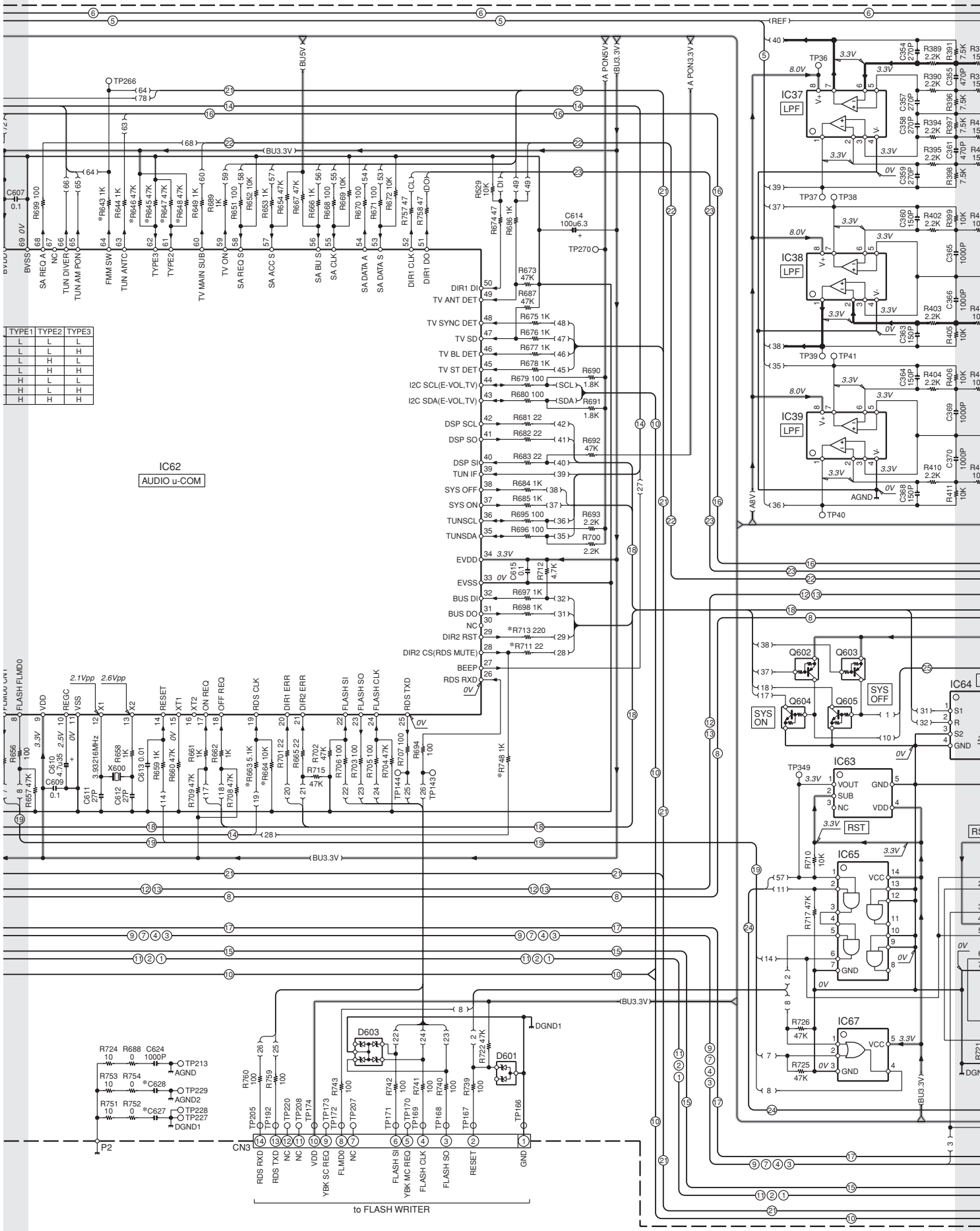

FZDA07ELEF2/EREF2/MRHF2

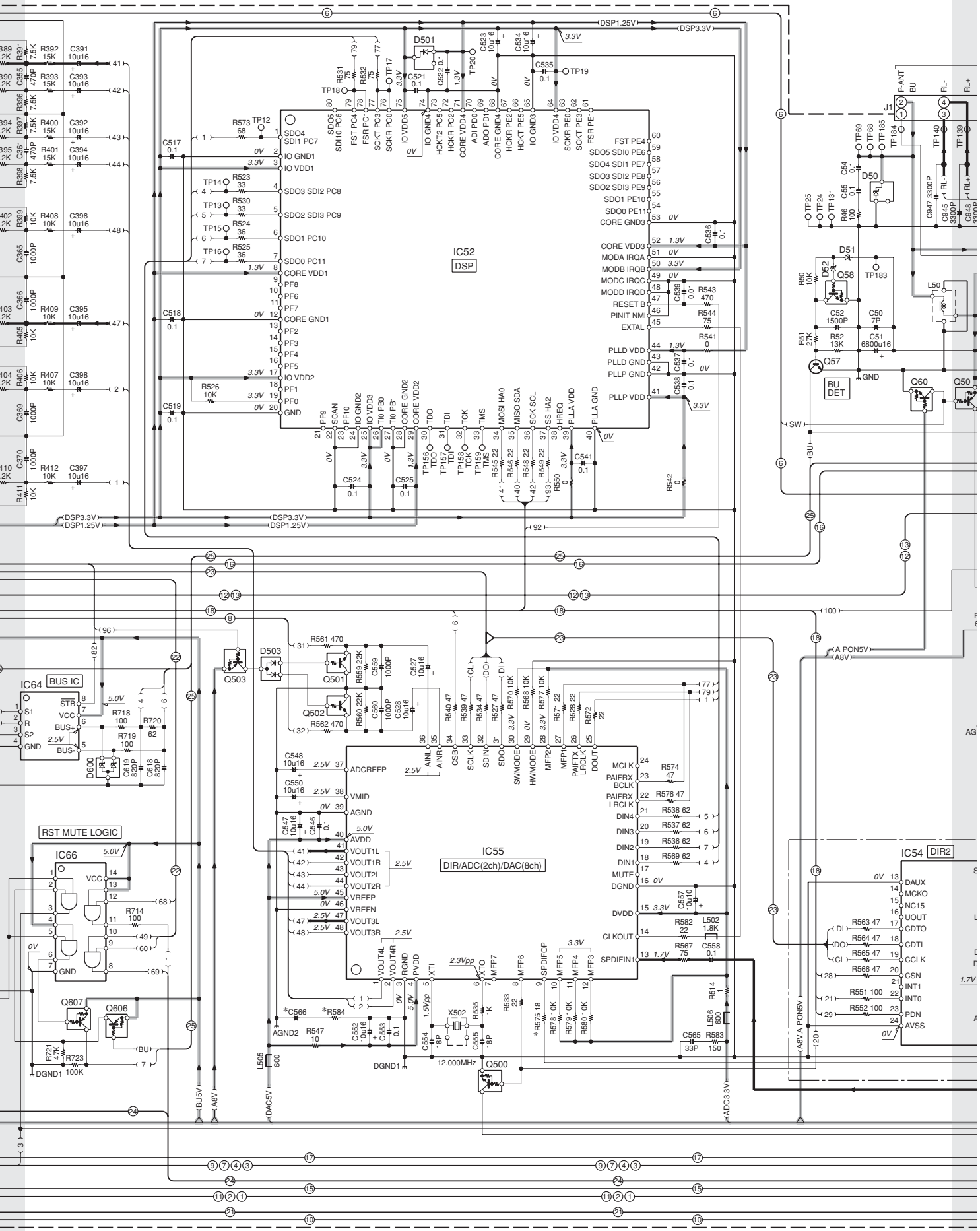

FZDA07ELEF2/EREF2/MRHF2

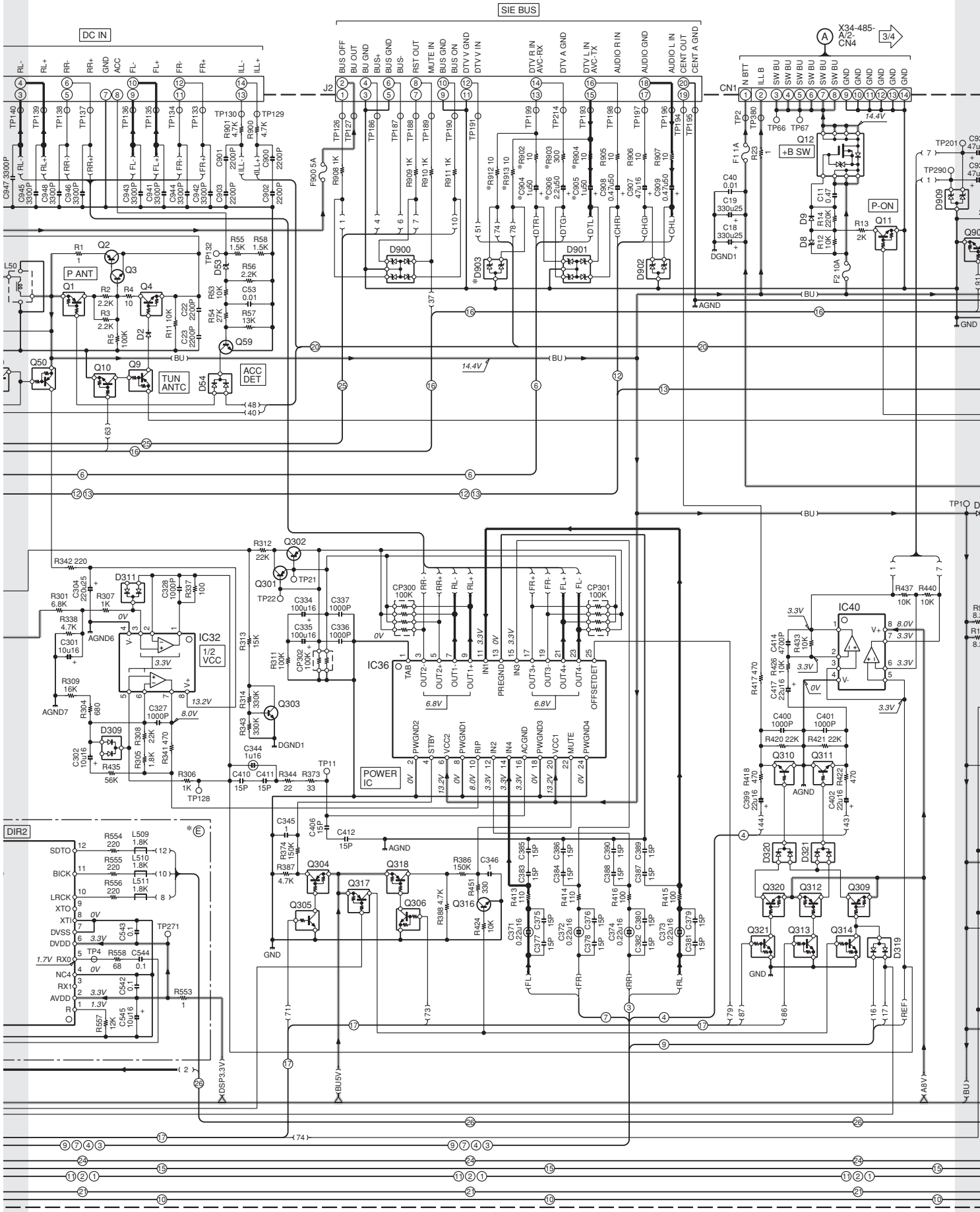

FZDA07ELEF2/EREF2/MRHF2

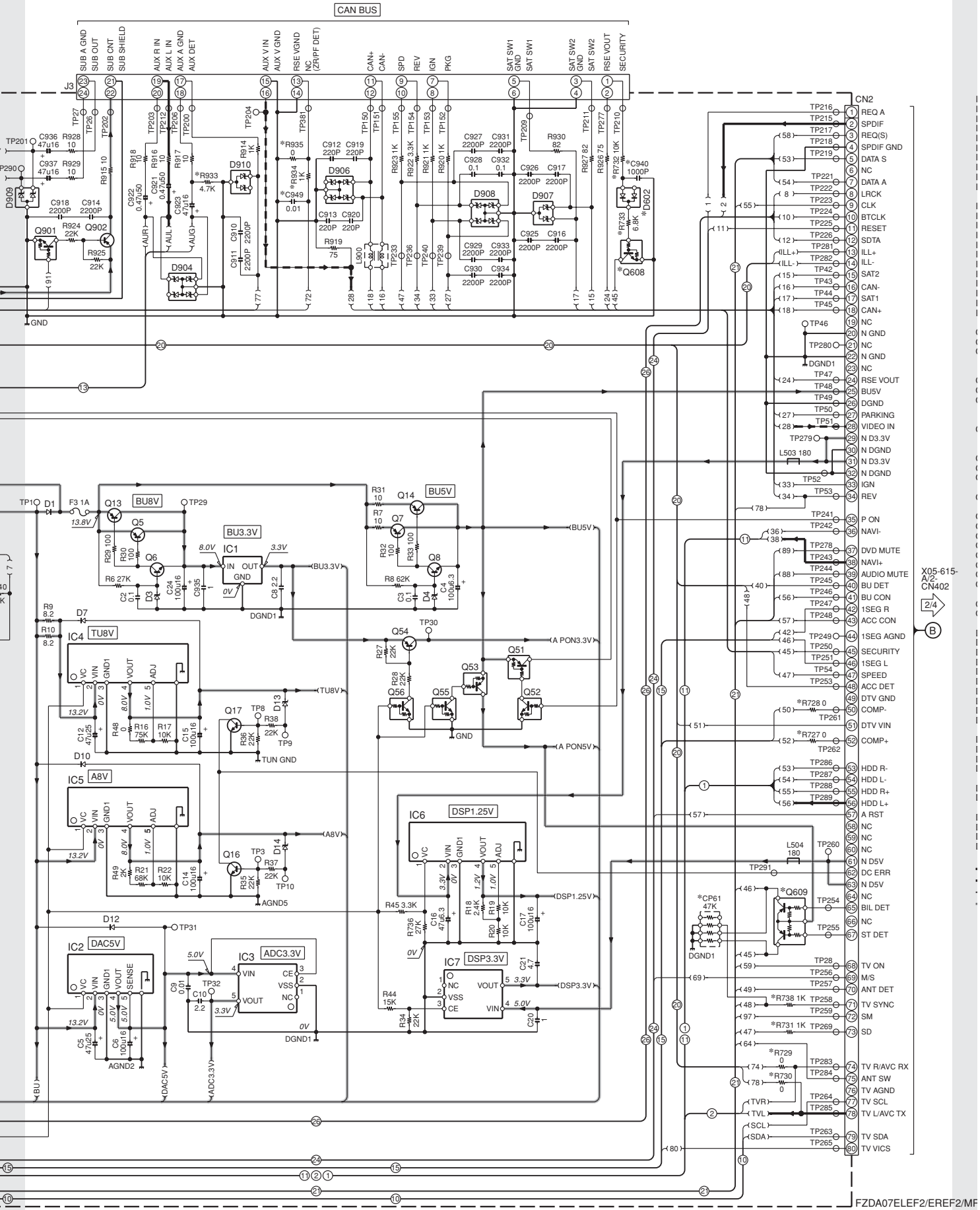

IC1 : XC6216D332JR
IC2 : SI-3050KD
IC3,7 : XC6219B332PR
IC4,5 : SI-3010KD
IC6 : SI-3010KM
IC10 : E-TDA7478AD
IC11 : TA2083AFNG
IC30 : NJM2060V-ZB
IC31 : NJM2750M-ZB
IC32,33,35,37-40,61 : NJM4565V-ZB
IC34 : E-TDA7415CB
IC36 : TB2904HQ
IC52 : DSPA56371AF180
IC54 : AK4117VF
IC55 : WM8581GEFTRV
IC60 : NJM2120M-ZB
IC62 : 70F3334GC5Y1
IC63 : BU4829FVE
IC64 : HA12240FPER-E
IC65 : TC74LVX08FT
IC66 : TC74VHCT08AFT
IC67 : TC7SH32FU-F

Q1,51,53,607 : DTA114EUA
Q2 : CPH3105-E
Q3,6,8,16,17,57,59,106, 303,315,316,601 : 2SC4081
Q4 : DTC143EUA
Q5,7,13,14 : 2SB1202-E
Q9,50,104,203,304,309, 312,317,318,320,503, 602,603 : DTA124EUA
Q10,55,56,109,306,313, 319,321,500,901 : DTC124XUA
Q11,608 : DTC114EUA
Q12 : TPC8111-Q
Q52,60,314,604,605 : DTC124EUA
Q54,101,301,302,610, 902 : 2SA1576A
Q58 : DTC144EUA
Q100 : 2SK3018
Q102,606 : DTA144EUA
Q108 : DTA143EUA
Q200,201,204 : 2SC4703-AZ(SE
Q202 : 2SD1766
Q305,307,308 : DTC143TUA
Q310,311,501,502 : DTC643TU
Q600 : DTC123JUA
Q609 : UMA9N

D1 : 1SR154-400
D2,7,10,12 : 1SS355
D3,52 : UDZS8.2B
D4 : UDZS5.6B
D8 : UDZS16B
D9 : 1SS352-F
D13,14 : UDZS10B
D50 : ST70-27F-5072
D51,53 : UDZS7.5B
D54,309,311,320,321, 602 : DAN202U
D100,101 : IMSA-6802-E
D102 : 1SV237-F
D200 : UDZS13B
D316,317,319,322,503 : DAP202U
D501 : RB411D
D600,601,902,903,907, 909 : STZ6.8N
D603 : NNCD3.6G-A
D900,901,904 : FTZ6.8E
D906,908 : NNCD27G-A
D910 : NNCD3.6F-A

VIDEO LINE
SIGNAL LINE
GND LINE
+B LINE

(X14-987x-xx)

MODEL NAME	UNIT No.	Ⓐ Ⓓ Ⓔ	Ⓑ	Ⓒ	A100	C100	C101	C307,308,321-324, 338,339,904-906,940	C566	C627	C628	C949	CP61	D101, 102	D602	D903	L101	Q608	Q609	Q610	R101	R102	R106	R136,622-624,627,639,641, 663,664,729,730,748,912,913	R575,643,711,713,727, 728,731-733,738,902-904	R594	R620,768, 769,933,934	R621, 935	R645	R646	R647	R648
FXHD07JGF2	0-00	YES	—	—	X86-4100-01	YES	—	YES	0.01	22P	1000P	YES	YES	—	YES	—	—	YES	YES	YES	—	YES	—	—	YES	1	YES	—	YES	—	YES	—
FZHA07JEGF2	0-01	YES	YES	—	X86-4100-03	YES	YES	YES	0.01	22P	1000P	—	YES	YES	YES	—	YES	YES	YES	—	YES	—	—	YES	1	—	YES	YES	—	YES	—
FZHA07JHGF2	0-11	—	—	YES	X86-4100-11	—	—	—	2200P	1000P	10P	YES	—	—	—	YES	—	—	—	YES	—	—	—	—	0.47	YES	—	YES	—	—	—	YES
FXDD07KF2	2-71	—	—	YES	X86-4102-70	—	—	—	2200P	1000P	10P	YES	—	—	—	YES	—	—	—	YES	—	—	—	—	0.47	YES	—	YES	YES	YES	—	—
FZDA07EREF2	2-72	—	—	YES	X86-4102-71	—	—	—	2200P	1000P	10P	—	—	—	—	YES	—	—	—	—	—	—	—	YES	0.47	—	—	—	YES	YES	—	—
FZDA07ELEF2																																
FXDD07MF2	0-21	—	—	YES	X86-4100-11	—	—	—	2200P	1000P	10P	YES	—	—	—	YES	—	—	YES	YES	—	—	YES	YES	0.47	YES	—	—	YES	—	YES	YES
FZDA07MRHF2	0-22	—	YES	YES	X86-4100-13	YES	YES	—	2200P	1000P	10P	—	—	YES	—	YES	—	—	—	—	—	—	YES	YES	0.47	—	—	—	YES	—	YES	YES

DTA143XE
DTA143ZE
DTA144EUA
DTC114EE
DTC143TUA
2SA1576A
2SC4617
2SD2114K

2SB1202-E

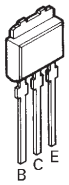

2SD1858

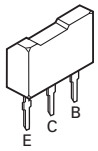

2SB1184

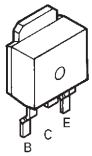

2SB1443

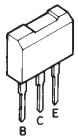

2SA1774
2SC4081

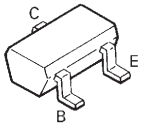

DTA114EUA
DTA124EUA
DTA143EUA
DTC114EUA
DTC123JUA
DTC124EUA
DTC143EUA
DTC144EUA

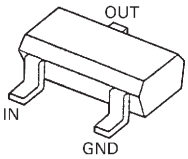

DAN202U

DAP202U
DA204U

CAUTION : For continued safety, replace safety critical components only with manufacturer's recommended parts (refer to parts list).
⚠Indicates safety critical components. To reduce the risk of electric shock, leakage-current or resistance measurements shall be carried out (exposed parts are acceptably insulated from the supply circuit) before the appliance is returned to the customer.

- DC voltages are as measured with a high impedance voltmeter. Values may vary slightly due to variations between individual instruments or/and units.

FZDA07ELEF2/EREF2/MRHF2

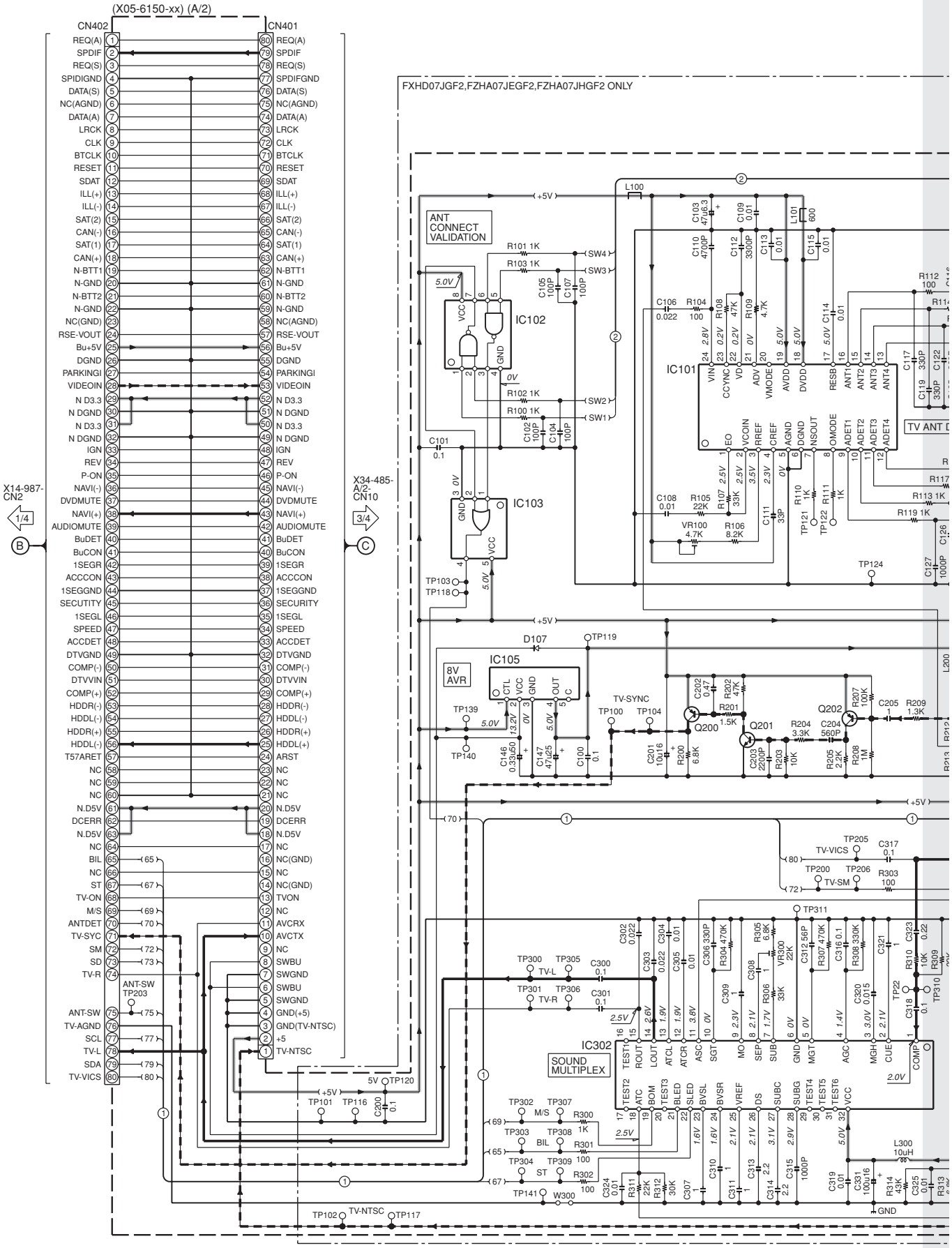

FZDA07ELEF2/EREF2/MRHF2

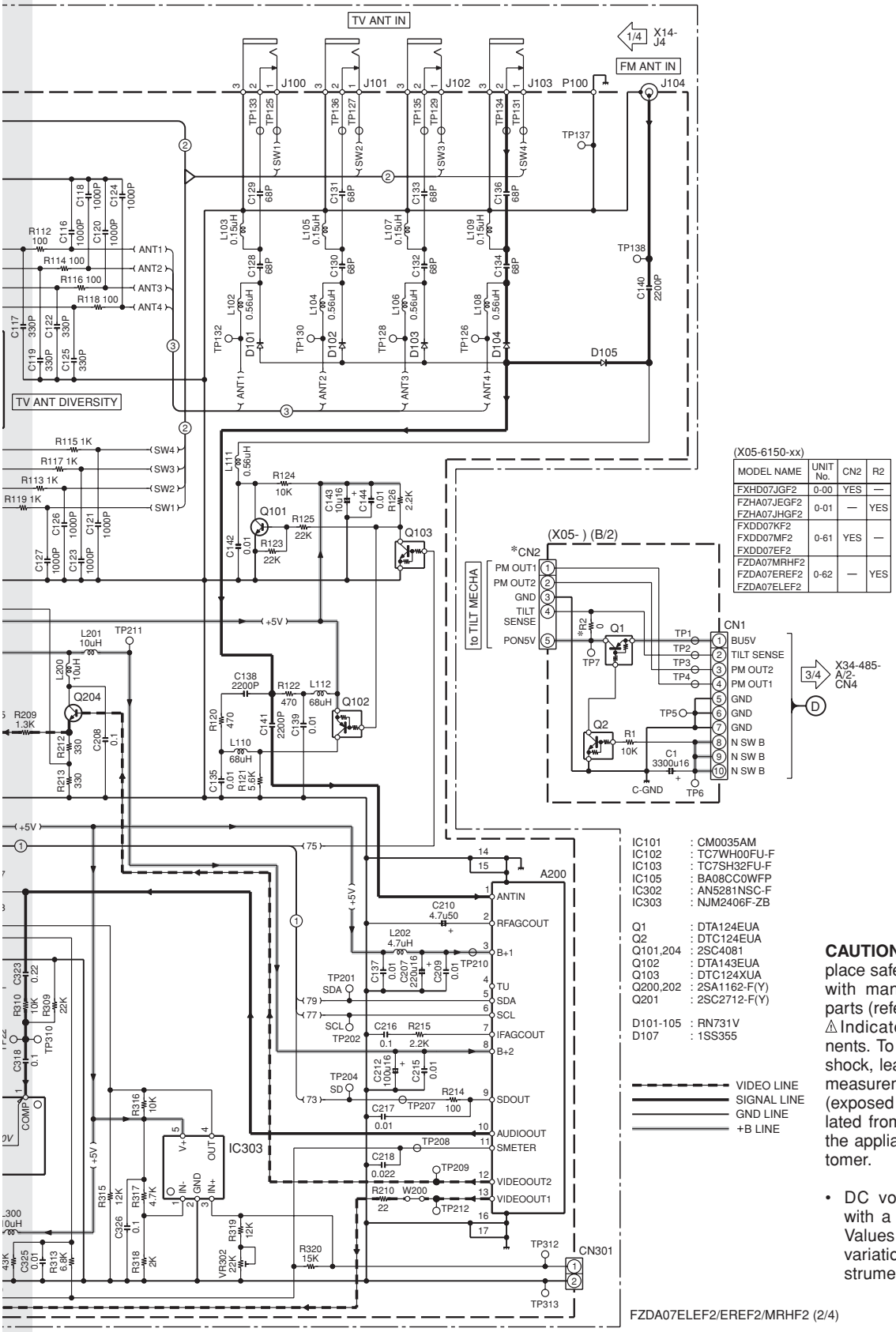

(X05-6150-xx)

MODEL NAME	UNIT No.	CN2	R2
FXHD07JGF2	0-00	YES	—
FZHA07JEGF2 FZHA07JHGF2	0-01	—	YES
FXDD07KF2 FXDD07MF2 FXDD07EF2	0-61	YES	—
FZDA07MRHF2 FZDA07EREF2 FZDA07ELEF2	0-62	—	YES

IC101 : CM0035AM
IC102 : TC7WH00FU-F
IC103 : TC7SH32FU-F
IC105 : BA08CC0WFP
IC302 : AN5281NSC-F
IC303 : NJM2406F-ZB

Q1 : DTA124EUA
Q2 : DTC124EUA
Q101,204 : 2SC4081
Q102 : DTA143EUA
Q103 : DTC124XUA
Q200,202 : 2SA1162-F(Y)
Q201 : 2SC2712-F(Y)

D101-105 : RN731V
D107 : 1SS355

CAUTION : For continued safety, replace safety critical components only with manufacturer's recommended parts (refer to parts list).
⚠Indicates safety critical components. To reduce the risk of electric shock, leakage-current or resistance measurements shall be carried out (exposed parts are acceptably insulated from the supply circuit) before the appliance is returned to the customer.

- DC voltages are as measured with a high impedance voltmeter. Values may vary slightly due to variations between individual instruments or/and units.

FZDA07ELEF2/EREF2/MRHF2 (2/4)

FZDA07ELEF2/EREF2/MRHF2

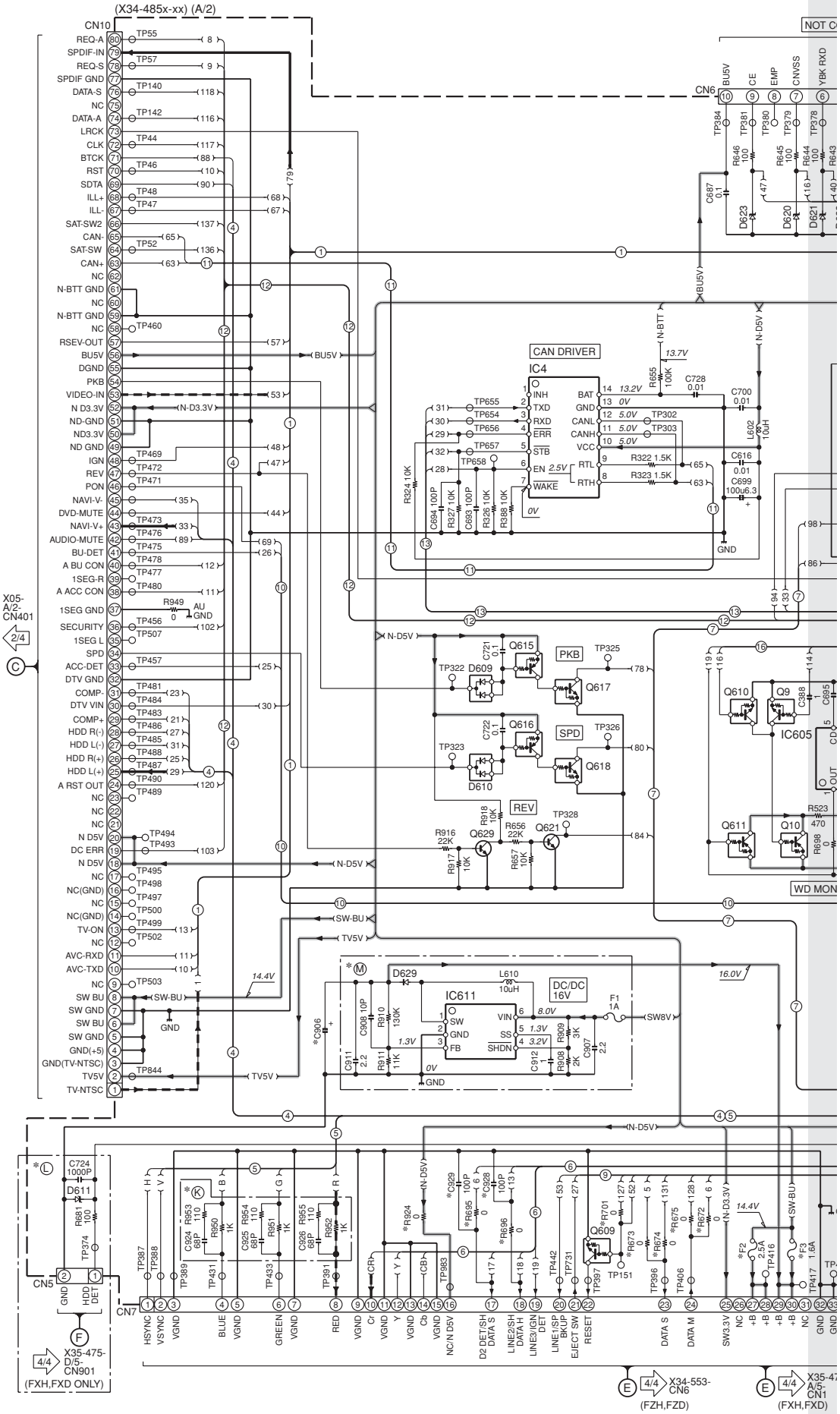

FZDA07ELEF2/EREF2/MRHF2

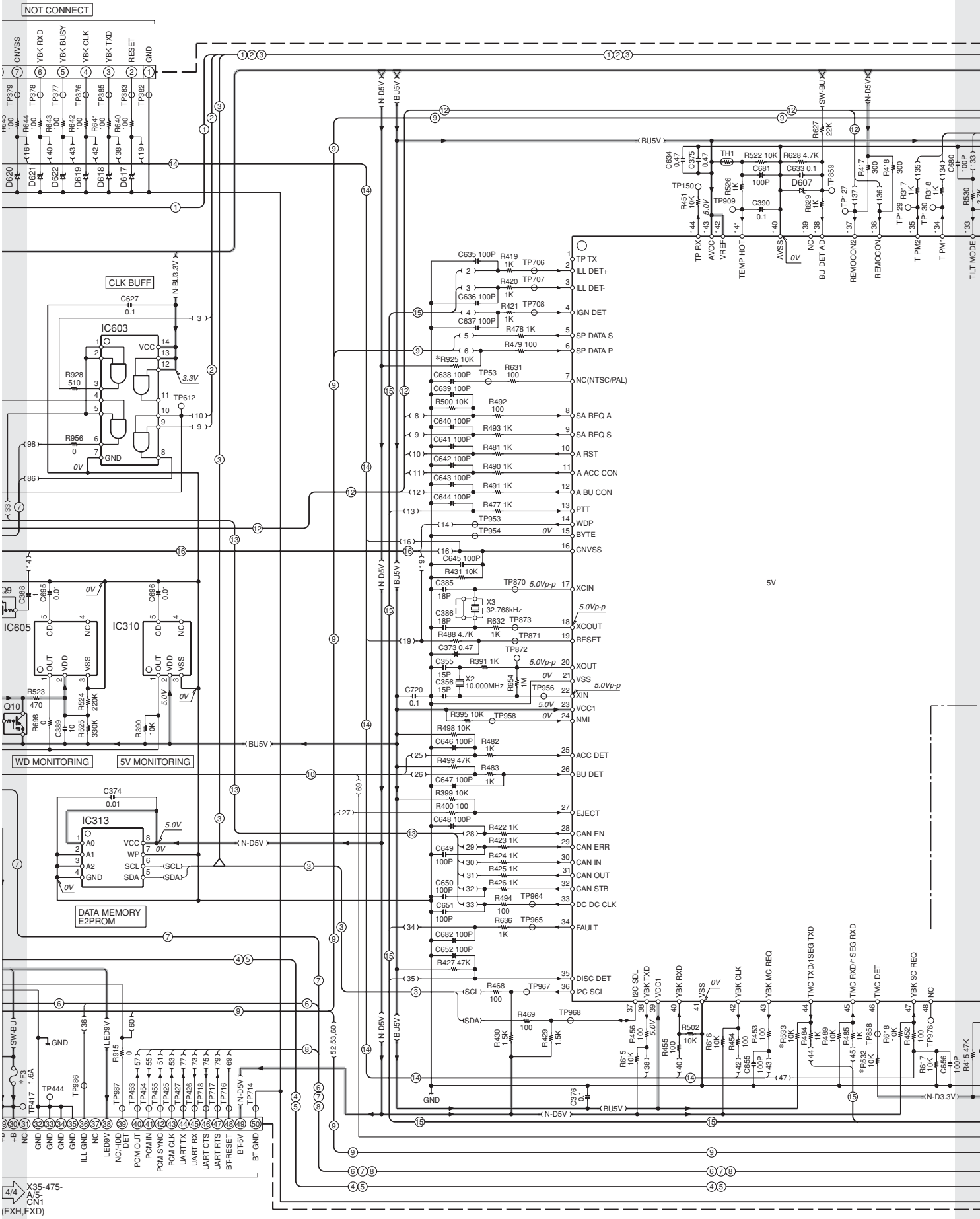

FZDA07ELEF2/EREF2/MRHF2

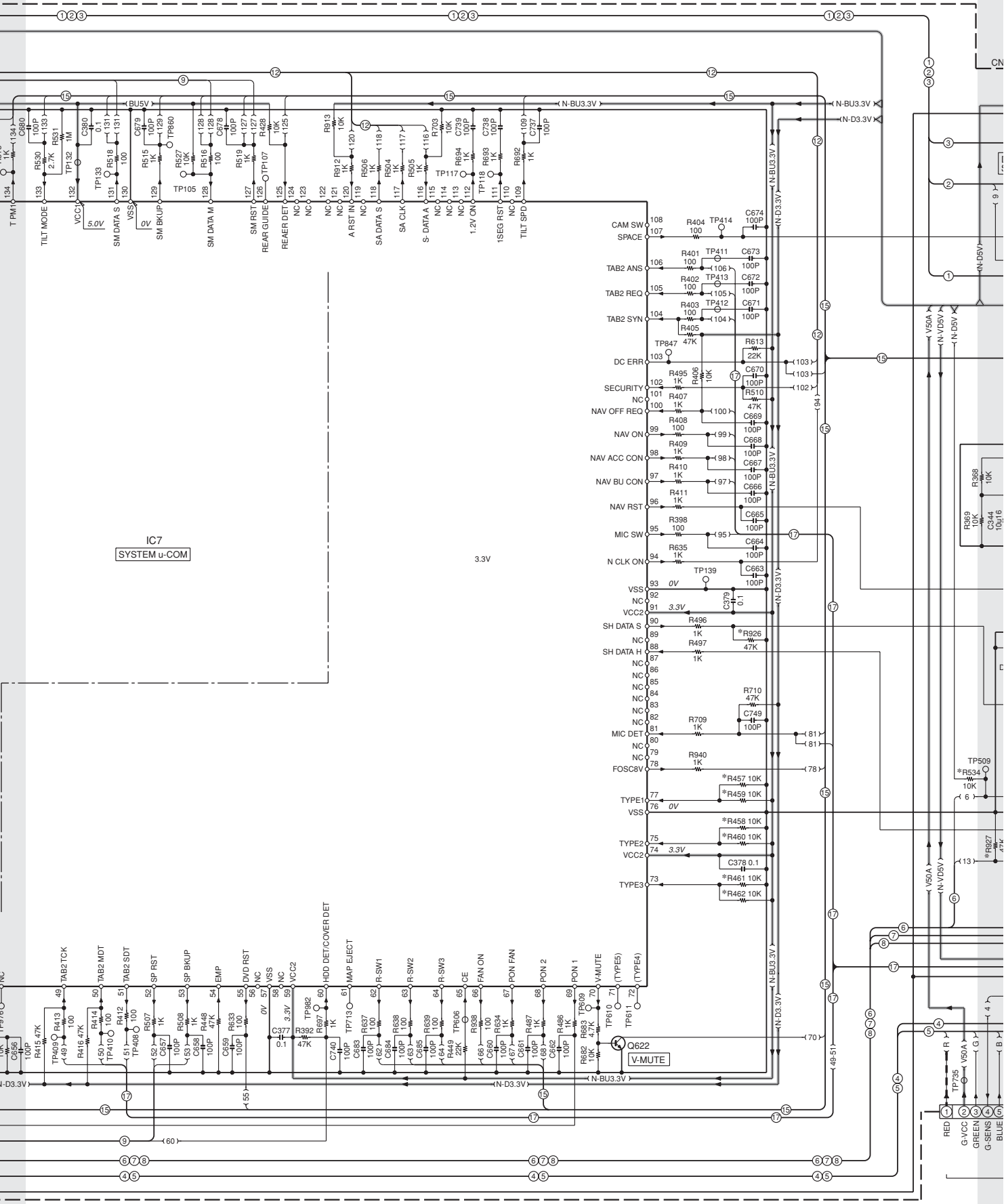

FZDA07ELEF2/EREF2/MRHF2

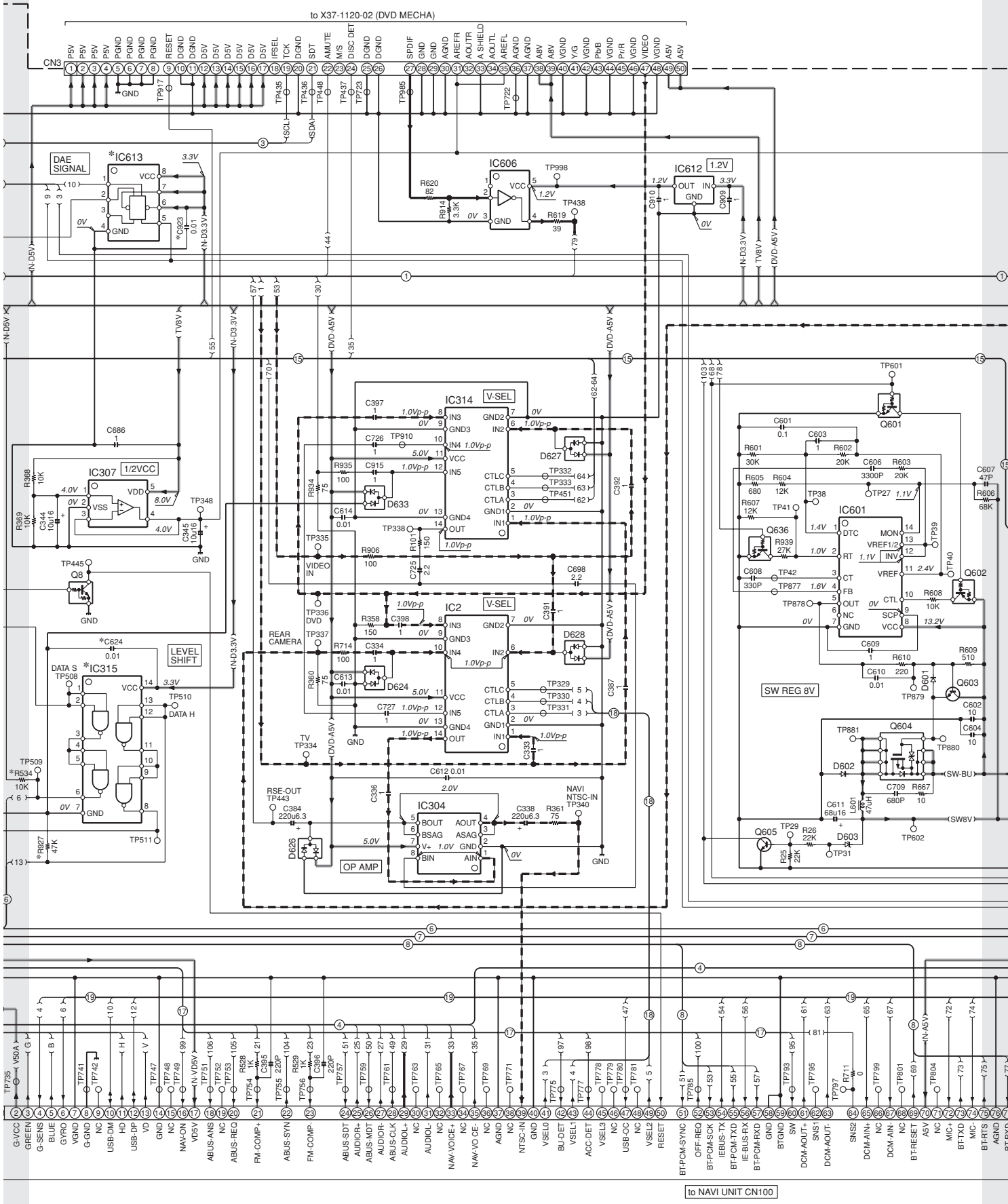

FZDA07ELEF2/EREF2/MRHF2

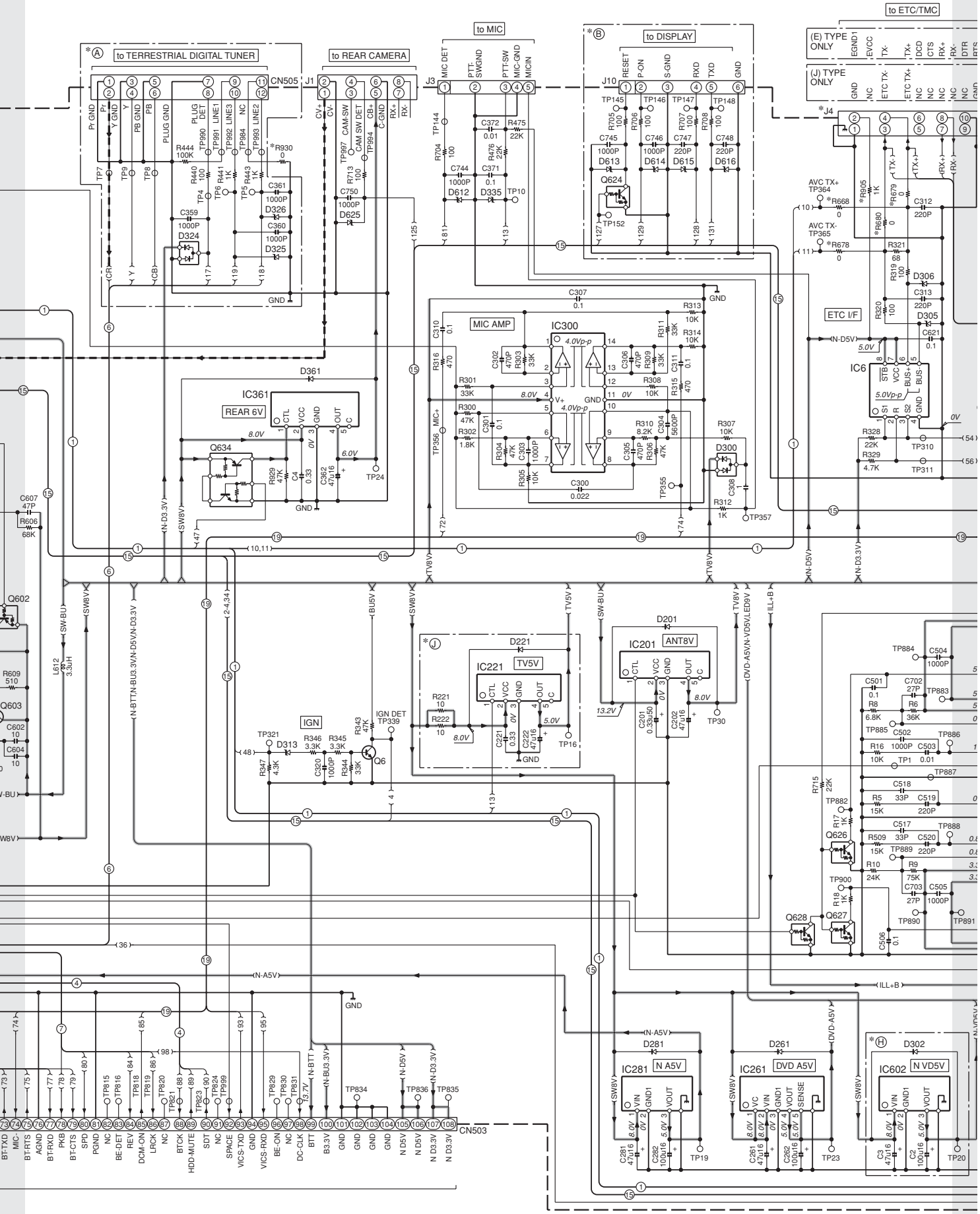

FZDA07ELEF2/EREF2/MRHF2

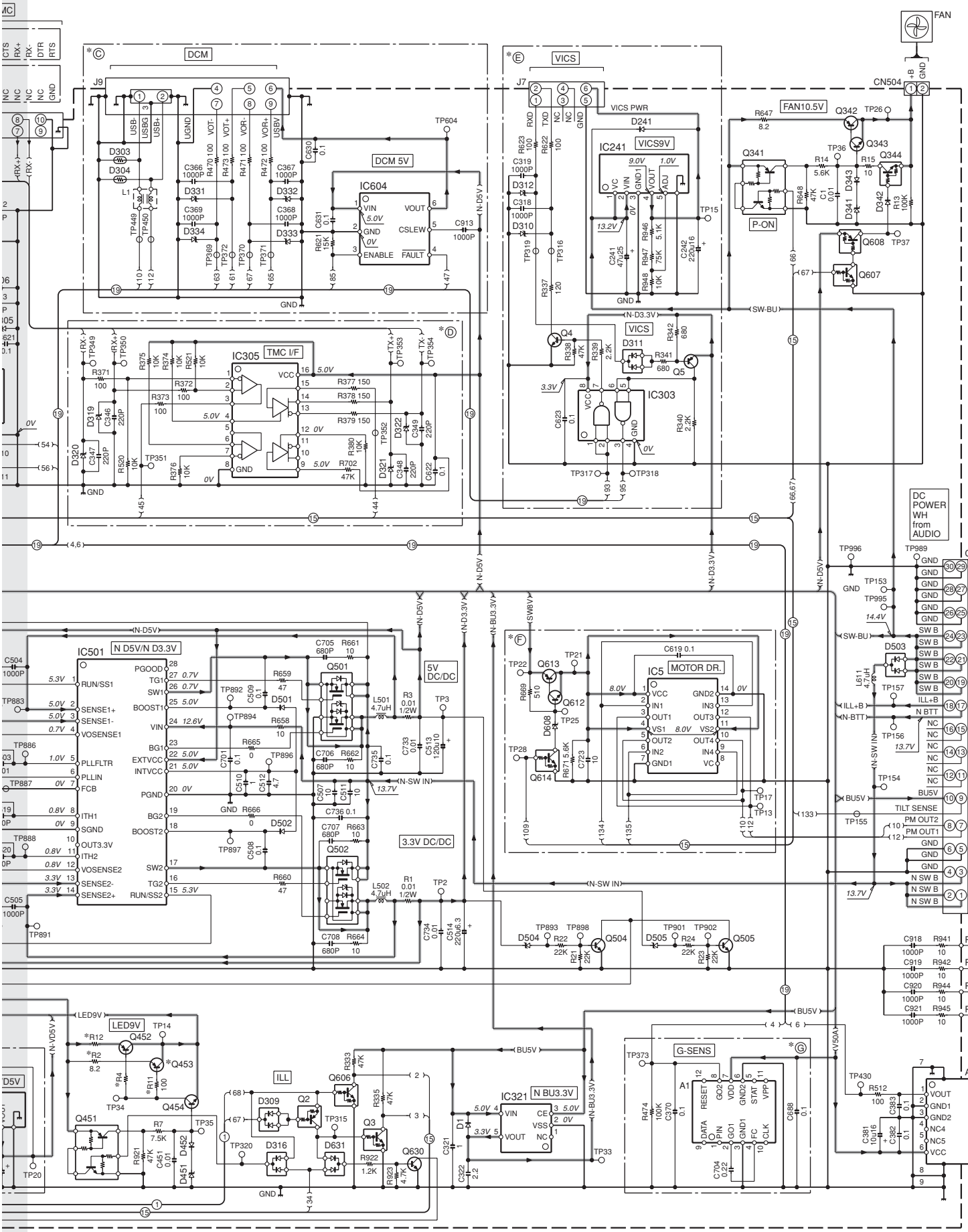

FZDA07ELEF2/EREF2/MRHF2

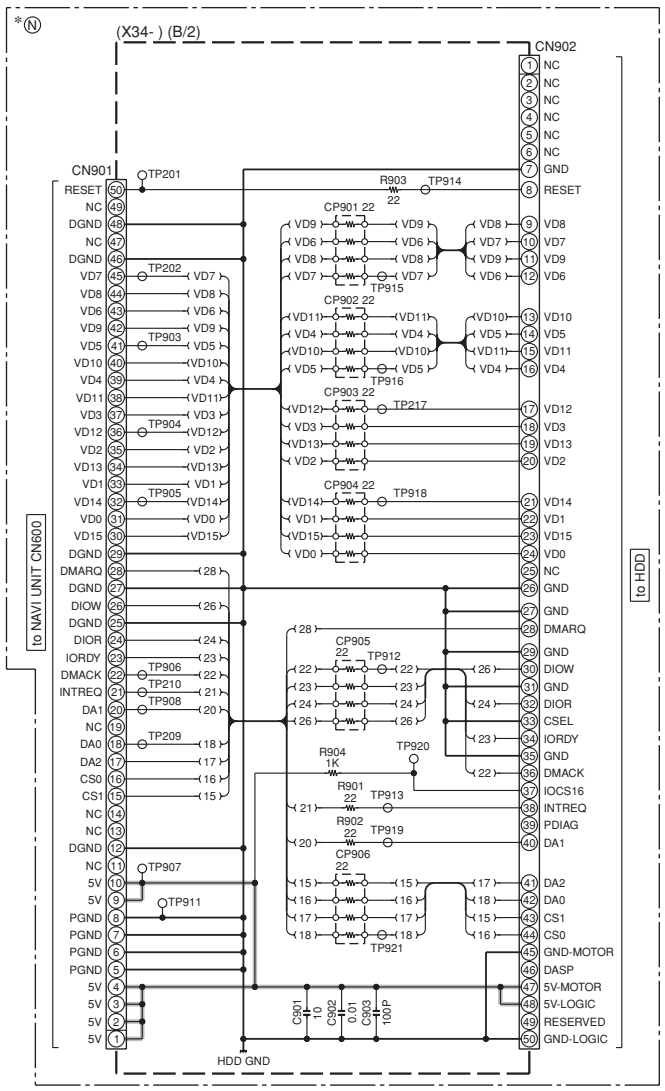

MODEL NAME	UNIT No.	Ⓐ Ⓛ	Ⓑ Ⓜ	Ⓒ Ⓔ Ⓖ Ⓙ Ⓝ	Ⓓ	Ⓕ Ⓗ Ⓚ	C624, 928, 929	C906	C923	F2,3	IC315	IC613	J4	Q453	R2,11,459,534, 672,673,695, 696,924-927	R4	R12	R457,674, 675,701	R458	R460	R461	R462	R532	R533, 905	R668, 678	R679, 680,930
FXHD07JGF2	0-00	YES	—	YES	—	YES	—	2.2u50	YES	—	YES	YES	YES	—	—	0	12	YES	YES	—	YES	—	—	—	—	YES
FZHA07JEGF2	0-01	—	YES	YES	—	—	YES	2.2u50	YES	—	YES	YES	YES	—	YES	100	8.2	—	YES	—	YES	—	—	—	—	YES
FXDD07KF2	0-11	—	—	—	—	YES	YES	—	—	YES	—	—	—	—	—	0	12	YES	—	YES	YES	—	—	—	YES	—
FXDD07EF2	2-71	—	—	—	YES	YES	—	—	—	YES	—	—	YES	—	—	0	12	YES	YES	—	—	YES	YES	YES	YES	—
FZDA07EREF2	2-72	—	YES	—	YES	—	YES	2.2	—	—	YES	YES	YES	YES	—	100	8.2	—	YES	—	—	—	—	YES	YES	—
FZDA07ELEF2	2-73	—	YES	—	YES	—	YES	2.2	—	—	YES	—	YES	YES	—	100	8.2	—	—	YES	YES	—	—	YES	YES	—
FXDD07MF2	0-21	—	—	—	—	YES	—	—	—	YES	—	—	—	—	—	0	12	YES	—	—	—	YES	—	—	—	—
FZDA07MRHF2	0-22	—	YES	—	—	—	YES	2.2	—	—	YES	—	—	YES	YES	100	8.2	—	—	YES	YES	YES	—	—	—	YES

(X34-485x-xx)

2SK3019

NJM2125F-ZB

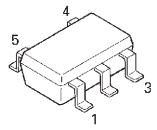

NJM2902V-ZB

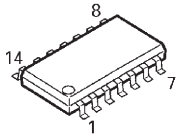

TC7SH32FU-F

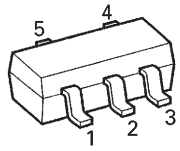

TC74VHC273FT

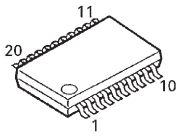

IC2,314	: BA7649F	Q2	: DTA143EUA	D1	: EP05Q04
IC4	: TJA1054-F	Q3,344,606	: DTC143EUA	D201,221,241,261,281, 302,342,343,361,452,601	: 1SS355
IC5	: LB1836M-TLM-E	Q4,6,343,454,504,505, 605,612,621,629	: 2SC4081	D300,324,624,626-628,633	: DA204U
IC6	: HA12240FPER-E	Q5	: 2SA1576A	D303,304	: IMSA-6802-E
IC7	: 30875FHAGP5Y0	Q8,607,609,614,624	: DTC143XUA	D305,306,310,312,319-322,325,326, 331-335,504,607,608,611-623,625	: UDZS5.6B
IC201	: BA08CC0WFP	Q9,610,626,627	: DTC144EUA	D309,311,316,609,610,631	: DAN202U
IC221	: BA05CC0WFP	Q10,611	: DTA144EUA	D313	: UDZS6.8B
IC241	: SI-3010KD	Q341,451,634	: UMD9N	D341	: UDZS11B
IC261	: SI-3050KD	Q342	: 2SB1184	D451	: UDZS9.1B
IC281,602	: SI-3050KMS	Q452,453	: 2SB1202-E	D501,502	: 1SS357-F
IC300	: NJM2902V-ZB	Q501,502	: HAT2218R-E	D503	: DE5LC20U-7061
IC303	: TC7WH00FU-F	Q601,628,636	: DTC124XUA	D505	: UDZS7.5B
IC304	: NJM2267V-ZB	Q602,608	: DTA124EUA	D602	: FA3J3S
IC305	: SN65C1168NS	Q603	: 2SC5824	D603	: UDZS10B
IC307	: NJM2125F-ZB	Q604	: RSS050P03	D629	: DG1H3-5063
IC310	: S-80943CNMC-G	Q613	: 2SB1203-FA-E		
IC313	: BR24L01AFV-W	Q615,616	: DTA123YUA		
IC315	: TC74LCX00FT-F	Q617,618	: DTC124EUA		
IC321	: XC6219B332PR	Q622	: 2SD2114K		
IC361	: BA06CC0WFP	Q630	: 2SC4097		
IC501	: LTC3728LEGN				
IC601	: BD9300FV				
IC603	: TC74LCX08FT				
IC604	: MIC2005-12YM6				
IC605	: S-80925CNMC-G				
IC606	: TC7SG04FU-F				
IC611	: LT3467A				
IC612	: XC6206P122MR				
IC613	: TC7WH74FU-F				

VIDEO LINE
SIGNAL LINE
GND LINE
+B LINE

CAUTION : For continued safety, replace safety critical components only with manufacturer's recommended parts (refer to parts list).
⚠Indicates safety critical components. To reduce the risk of electric shock, leakage-current or resistance measurements shall be carried out (exposed parts are acceptably insulated from the supply circuit) before the appliance is returned to the customer.

- DC voltages are as measured with a high impedance voltmeter. Values may vary slightly due to variations between individual instruments or/and units.

FZDA07ELEF2/EREF2/MRHF2 (3/4)

FZDA07ELEF2/EREF2/MRHF2

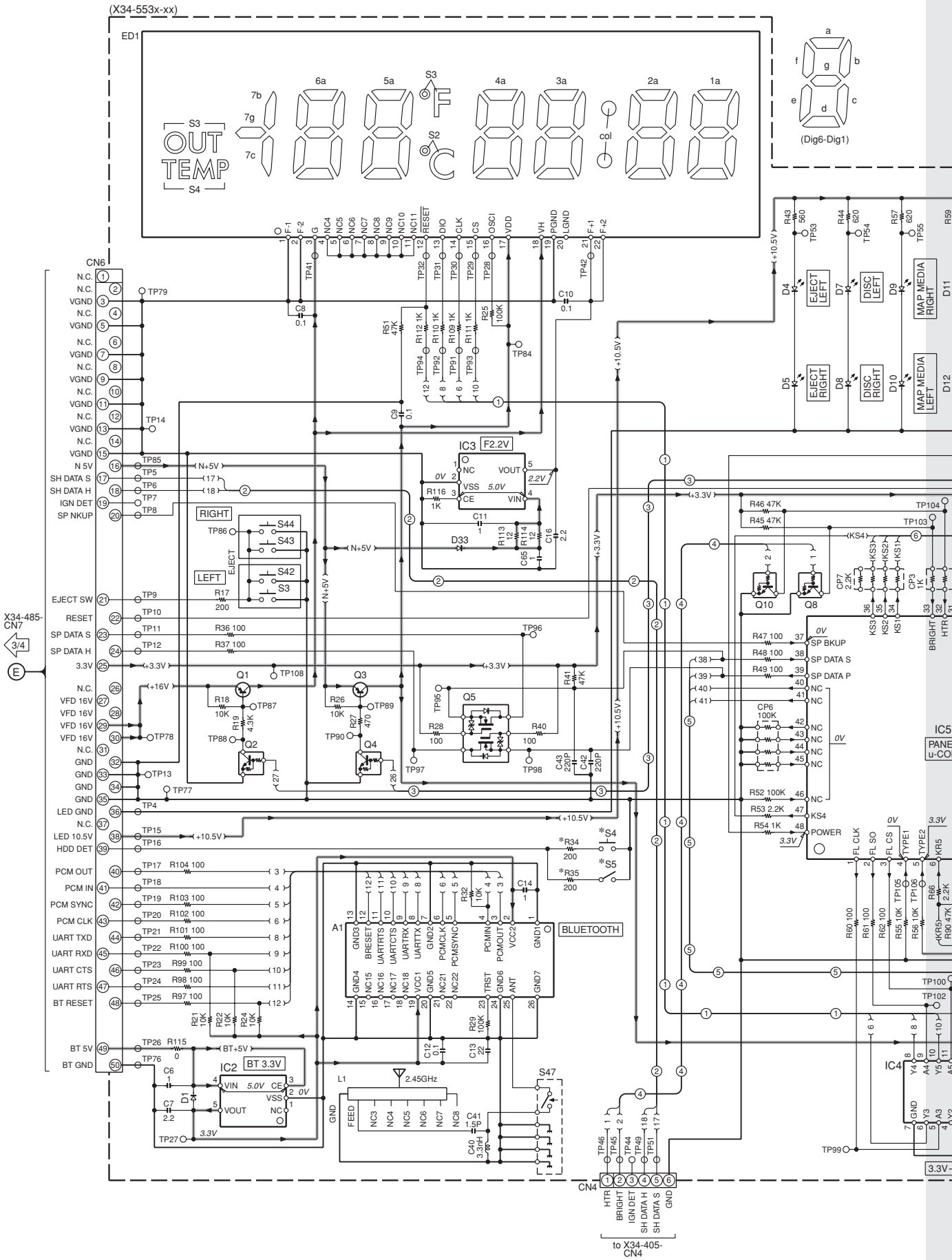

FZDA07ELEF2/EREF2/MRHF2

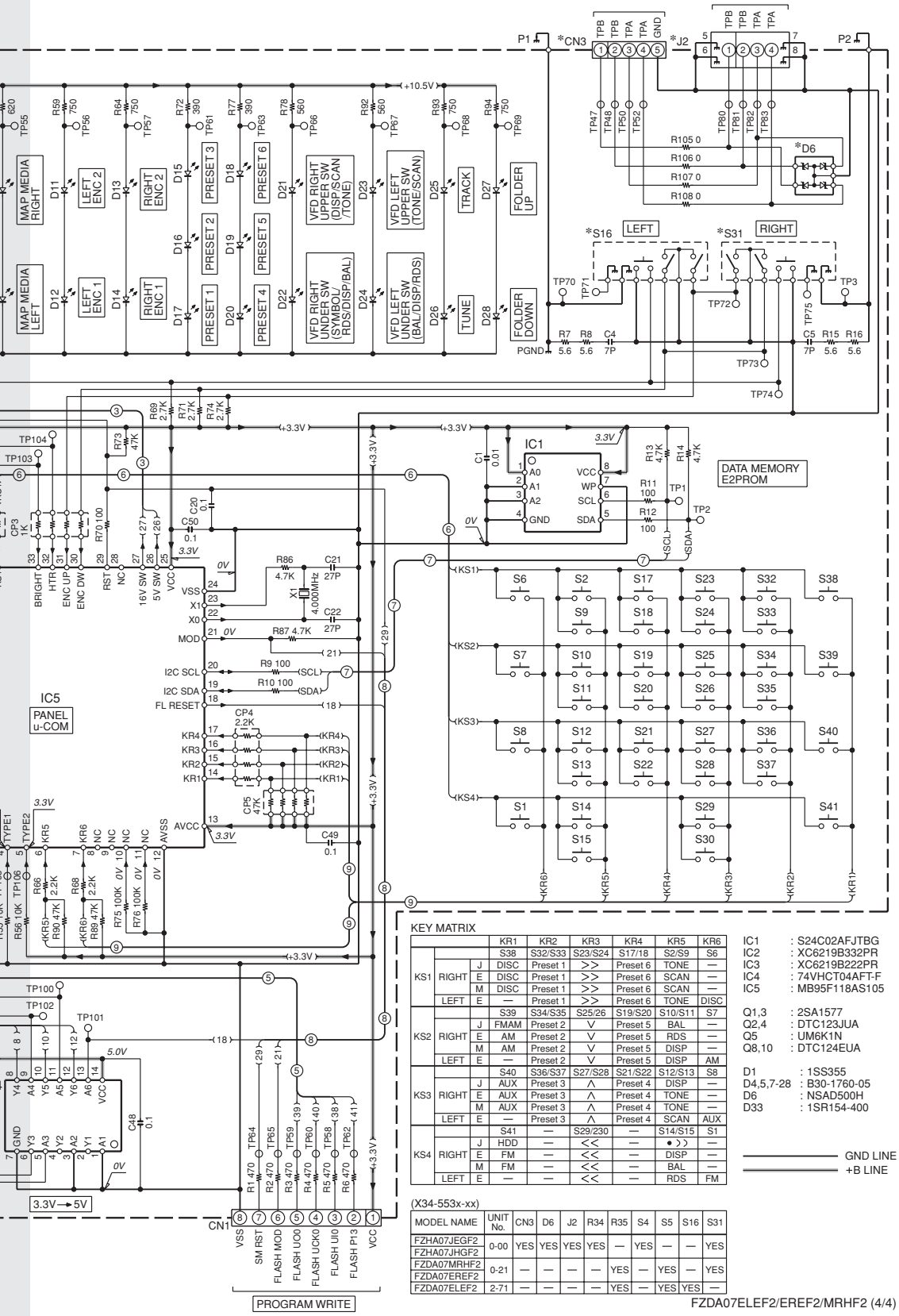

KEY MATRIX

			KR1	KR2	KR3	KR4	KR5	KR6
			S38	S32/S33	S23/S24	S17/18	S2/S9	S6
KS1	RIGHT	J	DISC	Preset 1	>>	Preset 6	TONE	—
		E	DISC	Preset 1	>>	Preset 6	SCAN	—
		M	DISC	Preset 1	>>	Preset 6	SCAN	—
	LEFT	E	—	Preset 1	>>	Preset 6	TONE	DISC
			S39	S34/S35	S25/26	S19/S20	S10/S11	S7
KS2	RIGHT	J	FMAM	Preset 2	∨	Preset 5	BAL	—
		E	AM	Preset 2	∨	Preset 5	RDS	—
		M	AM	Preset 2	∨	Preset 5	DISP	—
	LEFT	E	—	Preset 2	∨	Preset 5	DISP	AM
			S40	S36/S37	S27/S28	S21/S22	S12/S13	S8
KS3	RIGHT	J	AUX	Preset 3	∧	Preset 4	DISP	—
		E	AUX	Preset 3	∧	Preset 4	TONE	—
		M	AUX	Preset 3	∧	Preset 4	TONE	—
	LEFT	E	—	Preset 3	∧	Preset 4	SCAN	AUX
			S41	—	S29/230	—	S14/S15	S1
KS4	RIGHT	J	HDD	—	<<	—	●))	—
		E	FM	—	<<	—	DISP	—
		M	FM	—	<<	—	BAL	—
	LEFT	E	—	—	<<	—	RDS	FM

IC1 : S24C02AFJTBG
IC2 : XC6219B332PR
IC3 : XC6219B222PR
IC4 : 74VHCT04AFT-F
IC5 : MB95F118AS105

Q1,3 : 2SA1577
Q2,4 : DTC123JUA
Q5 : UM6K1N
Q8,10 : DTC124EUA

D1 : 1SS355
D4,5,7-28 : B30-1760-05
D6 : NSAD500H
D33 : 1SR154-400

GND LINE
+B LINE

(X34-553x-xx)

MODEL NAME	UNIT No.	CN3	D6	J2	R34	R35	S4	S5	S16	S31
FZHA07JEGF2	0-00	YES	YES	YES	YES	—	YES	—	—	YES
FZHA07JHGF2										
FZDA07MRHF2	0-21	—	—	—	—	YES	—	YES	—	YES
FZDA07EREF2										
FZDA07ELEF2	2-71	—	—	—	—	YES	—	YES	YES	—

FZDA07ELEF2/EREF2/MRHF2 (4/4)

CAUTION : For continued safety, replace safety critical components only with manufacturer's recommended parts (refer to parts list).
⚠Indicates safety critical components. To reduce the risk of electric shock, leakage-current or resistance measurements shall be carried out (exposed parts are acceptably insulated from the supply circuit) before the appliance is returned to the customer.

- DC voltages are as measured with a high impedance voltmeter. Values may vary slightly due to variations between individual instruments or/and units.

FZDA07ELEF2/EREF2/MRHF2

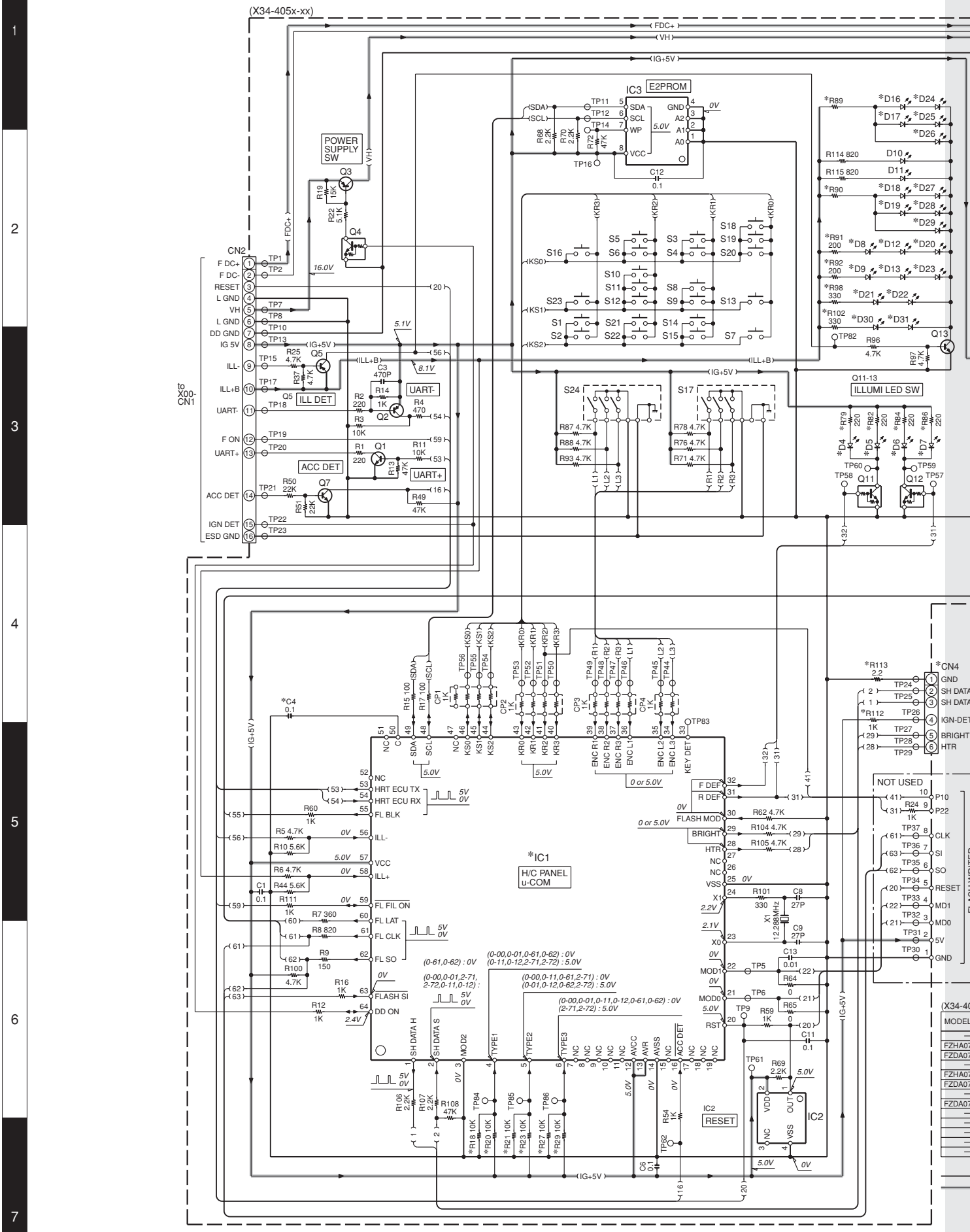

FZDA07ELEF2/EREF2/MRHF2

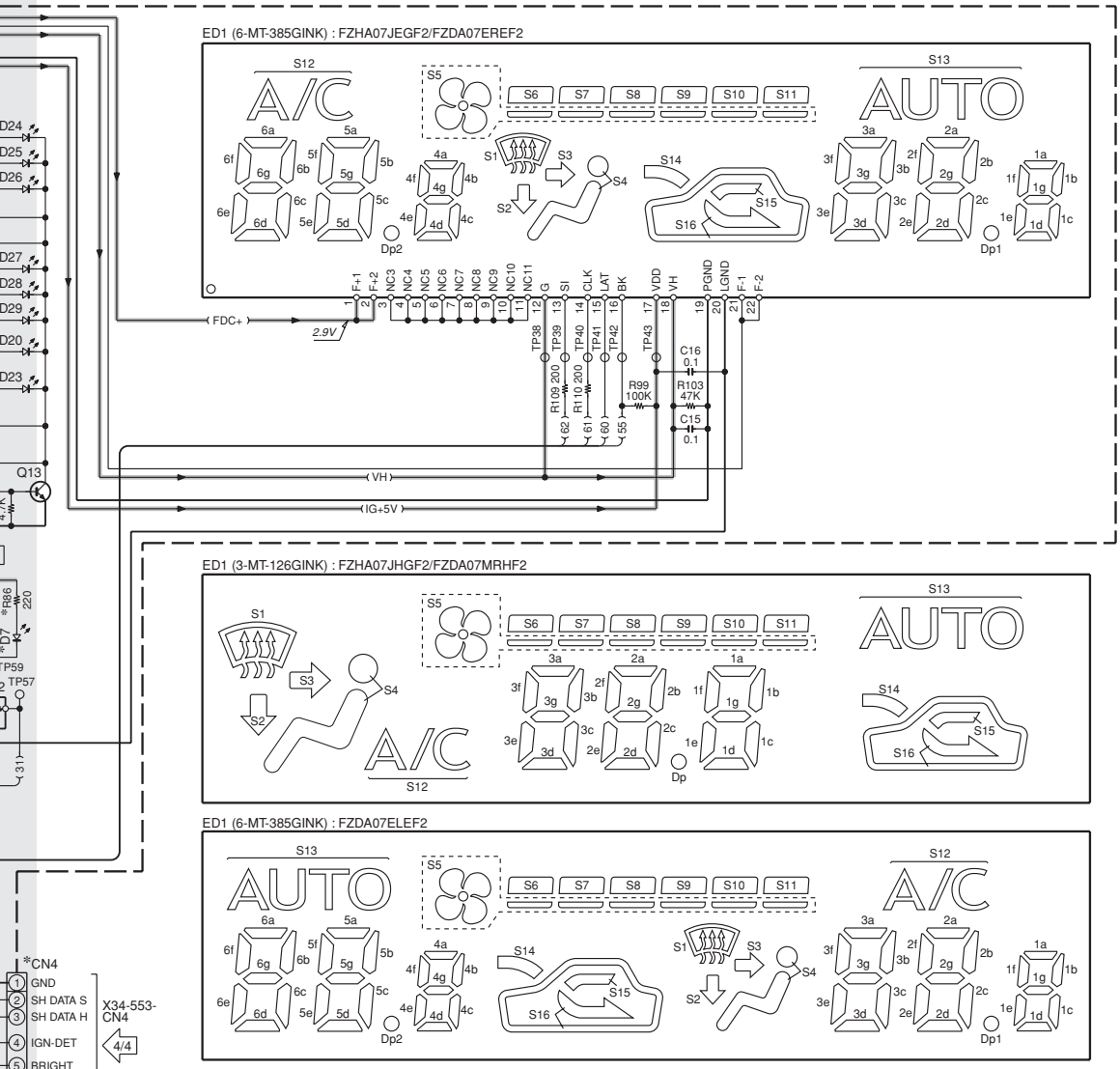

(0-00) , (0-61) , (0-02)

	KR0	KR1	KR2	KR3
KS0	S18,19(S20)	S3,4	S5,6	S16
		⌃	⌄	REAR DEF
KS1	S13	S8,9	S10,11(S12)	S23
	AUTO	—	A/C	FRONT DEF
KS2	S7	S14,15	S21,22	S1,2
	OFF	—	—	MODE

(0-01) , (0-62) , (0-03)

	KR0	KR1	KR2	KR3
KS0	S18,19(S20)	S3,4	S5,6	S16
	OFF			REAR DEF
KS1	S13	S8,9	S10,11(S12)	S23
	AUTO	—	A/C	FRONT DEF
KS2	S7	S14,15	S21,22	S1,2
	AUTO	—	—	MODE

(2-71) , (0-11) , (2-73)

	KR0	KR1	KR2	KR3
KS0	S18,20(S19)	S3,4	S5,6	S16
	A/C	—	—	AUTO
KS1	S13	S8,9	S10,12(S11)	S23
	REAR DEF	MODE		OFF
KS2	S7	S14,15	S21,22	S1,2
	FRONT DEF	⌃	⌄	—

(2-72) , (0-12)

	KR0	KR1	KR2	KR3
KS0	S18,20(S19)	S3,4	S5,6	S16
	A/C	—	—	AUTO
KS1	S13	S8,9	S10,12(S11)	S23
	REAR DEF	MODE	OFF	AUTO
KS2	S7	S14,15	S21,22	S1,2
	FRONT DEF			—

CAUTION : For continued safety, replace safety critical components only with manufacturer's recommended parts (refer to parts list).
⚠Indicates safety critical components. To reduce the risk of electric shock, leakage-current or resistance measurements shall be carried out (exposed parts are acceptably insulated from the supply circuit) before the appliance is returned to the customer.

- DC voltages are as measured with a high impedance voltmeter. Values may vary slightly due to variations between individual instruments or/and units.

(X34-405x-xx)

MODEL NAME	UNIT No.	C4	CN4	D4,6,8,12, 16,20-22,24	D5,7,9,13,19, 23,28,30,31	D17, 25	D18, 27	D26	D29	IC1	R18,79, 84,91,98	R20,82, 86,92,102	R21	R23	R27	R29	R89	R90	R112, 113
—	0-00	—	YES	YES	—	—	YES	—	—	MB89537A1010E	YES	—	YES	—	YES	—	620	620	YES
FZHA07JEGF2 FZDA07EREF2	0-02	YES	YES	YES	—	—	YES	—	—	MB89F538-1Y8	YES	—	YES	—	YES	—	620	620	YES
—	0-01	—	YES	YES	—	—	—	—	YES	MB89537A1010E	YES	—	—	YES	YES	—	620	820	YES
FZHA07JHGF2 FZDA07MRHF2	0-03	YES	YES	YES	—	—	—	—	YES	MB89F538-1Y8	YES	—	—	YES	YES	—	620	820	YES
—	2-71	—	YES	—	YES	YES	—	—	—	MB89537A1010E	—	YES	YES	—	—	YES	620	620	YES
FZDA07ELEF2	2-73	YES	YES	—	YES	YES	—	—	—	MB89F538-1Y8	—	YES	YES	—	—	YES	620	620	YES
—	2-72	—	YES	—	YES	—	—	YES	—	MB89537A1010E	—	YES	YES	—	—	YES	620	620	YES
—	0-11	—	YES	—	YES	YES	—	—	—	MB89537A1010E	—	YES	YES	—	YES	—	620	620	YES
—	0-12	—	YES	—	YES	—	—	YES	—	MB89537A1010E	—	YES	YES	—	YES	—	620	620	YES
—	0-61	—	—	YES	—	—	YES	—	—	MB89537A1010E	YES	—	YES	—	YES	—	330	330	—
—	0-62	—	—	YES	—	—	—	—	YES	MB89537A1010E	YES	—	—	YES	YES	—	330	470	—

GND LINE
+B LINE

IC1 : ✻
IC2 : S-80842CNNB-G
IC3 : BR24L01AF-W

Q1,7,13 : 2SC4081
Q2,3,5 : 2SA1576A
Q4 : DTC114EUA
Q11,12 : DTC143EUA

D4-7 : B30-1759-05
D8-13,16-31 : B30-1760-05

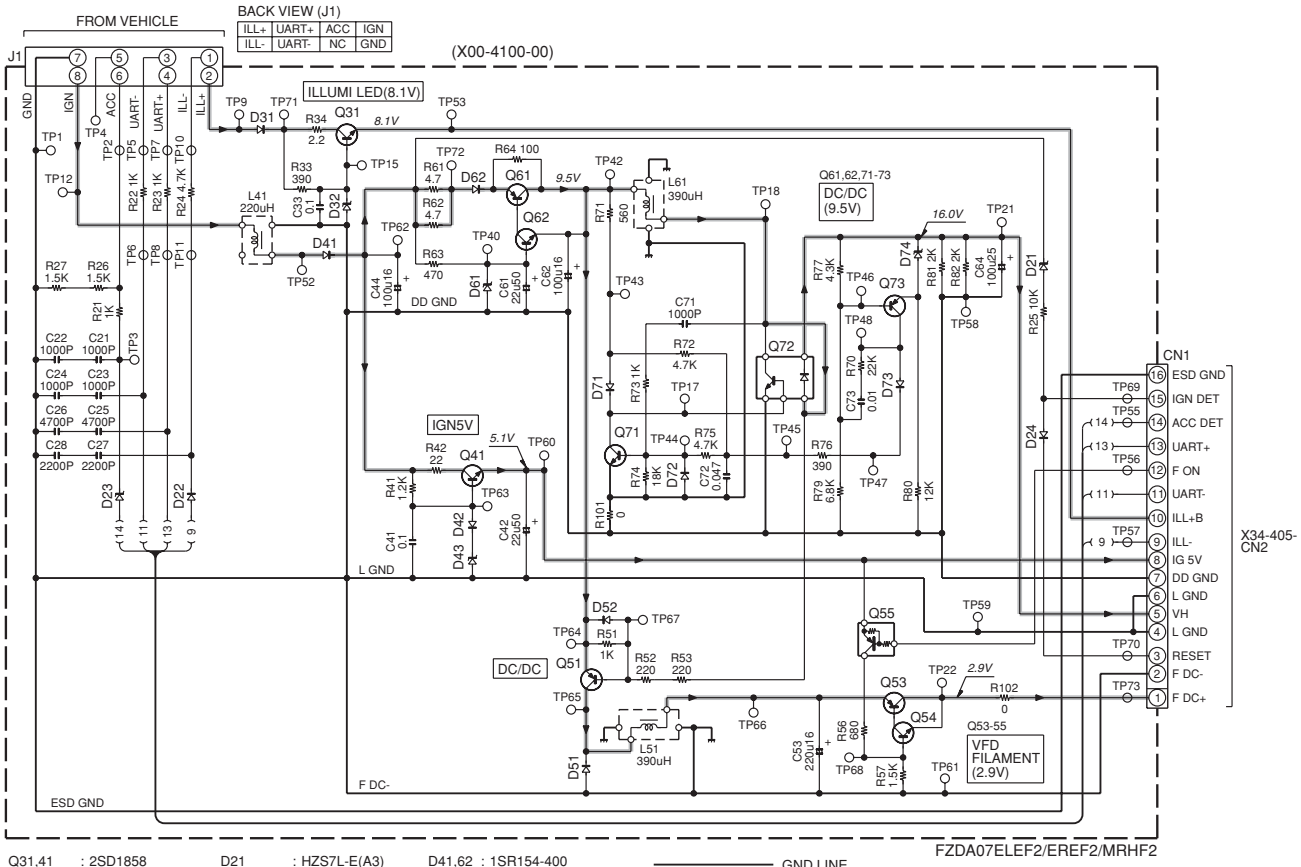

Q31,41	: 2SD1858	D21	: HZS7L-E(A3)	D41,62	: 1SR154-400
Q51,53,61	: 2SB1443	D22,24,31,42,52,71-73	: 1SS133	D43	: UDZS5.1B
Q54,62,71	: 2SC4081	D23	: HZS7L-E(B2)	D51	: RB160L-40
Q55	: DTA124EUA	D32	: HZS9L-E(B2)	D61	: HZS11L-E(A3)
Q72	: QSL12			D74	: UDZS5.6B
Q73	: 2SA1576A				

GND LINE
+B LINE

CAUTION : For continued safety, replace safety critical components only with manufacturer's recommended parts (refer to parts list).
⚠Indicates safety critical components. To reduce the risk of electric shock, leakage-current or resistance measurements shall be carried out (exposed parts are acceptably insulated from the supply circuit) before the appliance is returned to the customer.

- DC voltages are as measured with a high impedance voltmeter. Values may vary slightly due to variations between individual instruments or/and units.

FZDA07ELEF2/EREF2/MRHF2

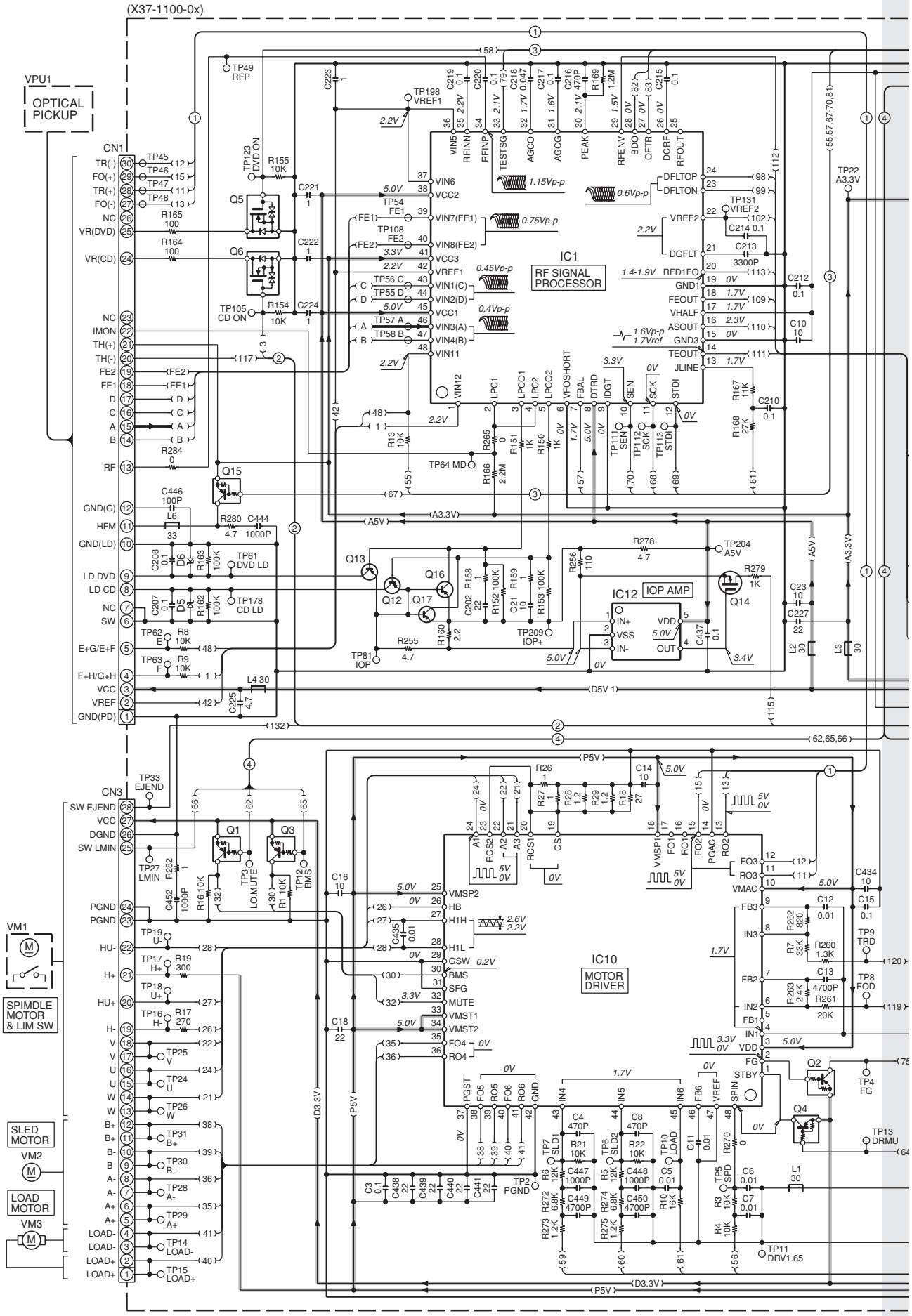

FZDA07ELEF2/EREF2/MRHF2

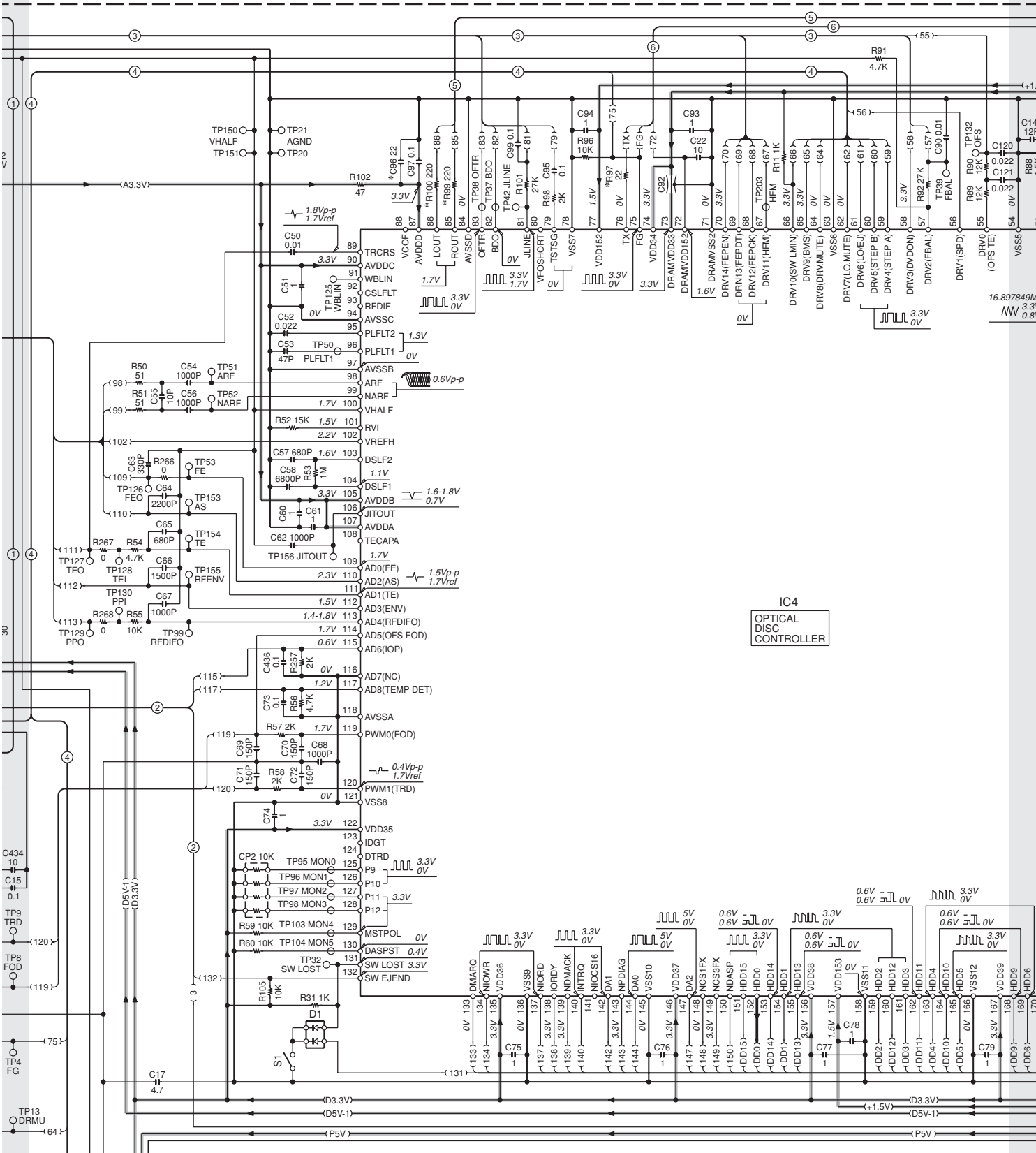

IC1	: AN22022ABV	Q1-4	: DTA143XE	D1	: 1SS402-F
IC3	: S29AL04D55TFI	Q5,6	: 2SK3019	D5,6	: 015AZ5.1-F(Y)
IC4	: MN103S71F	Q12,13	: 2SB1709	D8	: 1SS387-F
IC5	: S1000N28I4T1G	Q14	: SSM3J15FU-F		
IC7	: TA48S033AF-Q	Q15,18	: DTA143ZE		
IC8	: S-80812CNPF-G	Q16,17	: 2SA1774		
IC9	: TA48S015AF-Q	Q19	: DTC114EE		
IC10	: AN41250A-VB				
IC11	: S-24CS04AFT				
IC12	: NJU7042				

SIGNAL LINE
GND LINE
+B LINE

(X37-1100-0x)

UNIT No.	C96	CN2	R97, 99,100	R259	R281
0-00	—	E41-2598-05	—	—	YES
0-01	—	E41-2598-05	—	YES	—
0-02	YES	E41-2603-05	YES	—	YES

FZDA07ELEF2/EREF2/MRHF2

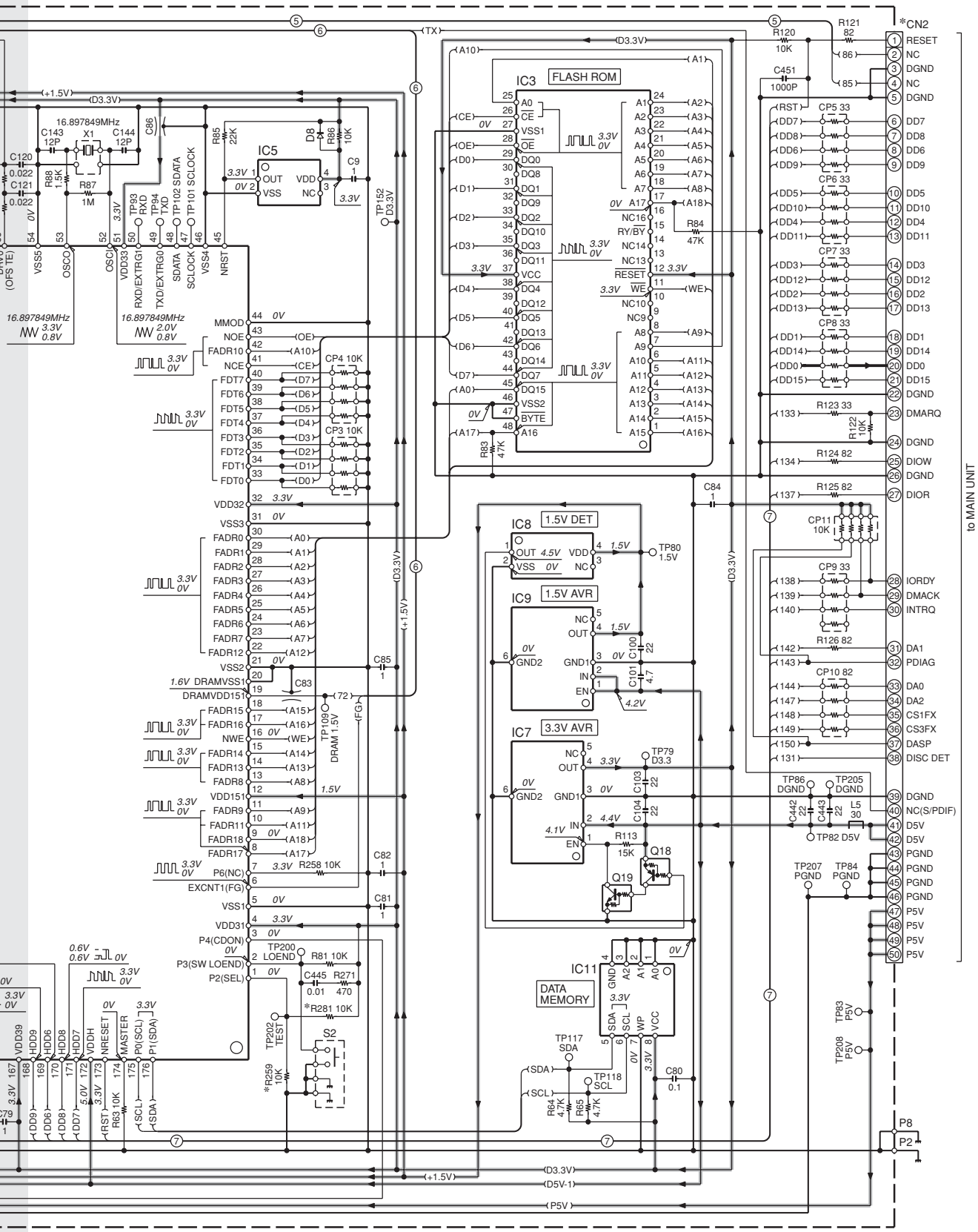

CAUTION : For continued safety, replace safety critical components only with manufacturer's recommended parts (refer to parts list). ⚠Indicates safety critical components. To reduce the risk of electric shock, leakage-current or resistance measurements shall be carried out (exposed parts are acceptably insulated from the supply circuit) before the appliance is returned to the customer.

- DC voltages are as measured with a high impedance voltmeter. Values may vary slightly due to variations between individual instruments or/and units.

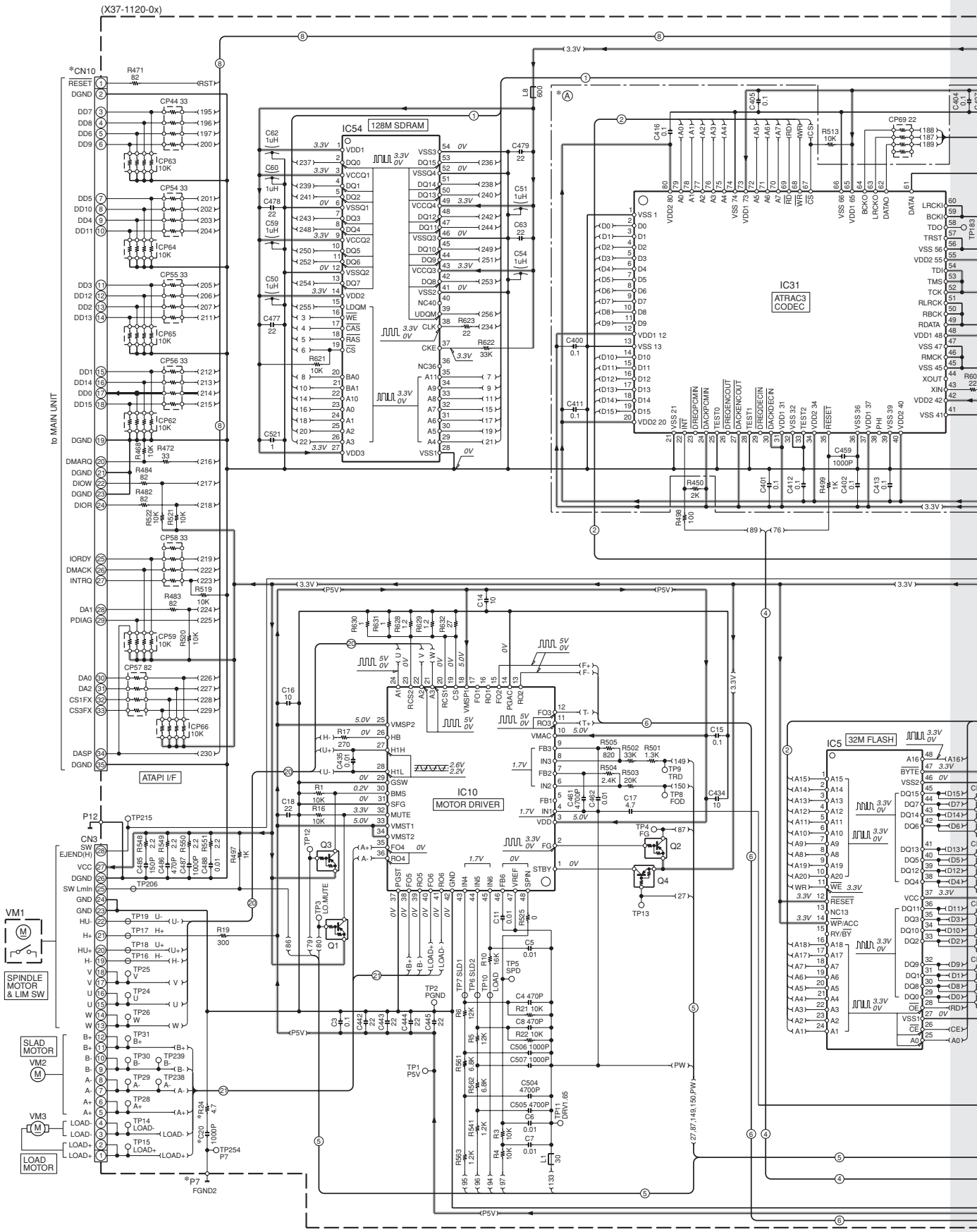
(X37-1120-0x)
*CN10
to MAIN UNIT
ATAPI I/F
IC54
128M SDRAM
IC31
ATRAC3 CODEC
IC10
MOTOR DRIVER
IC5
32M FLASH
CN3
P12
VM1
SPINDLE MOTOR & LIM SW
SLAD MOTOR
VM2
VM3
LOAD MOTOR
Q1
Q2
Q3
Q4

FZDA07ELEF2/EREF2/MRHF2

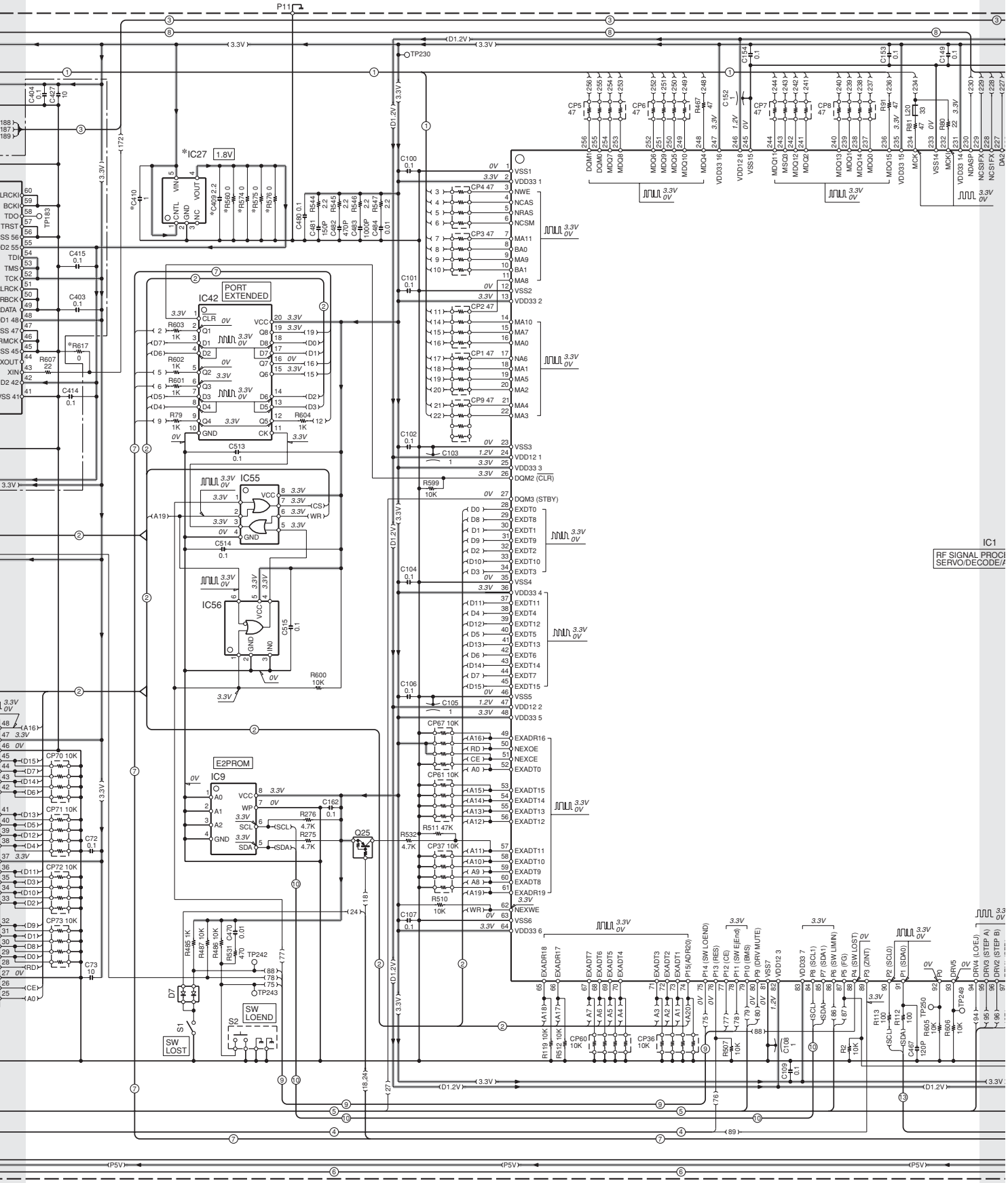

FZDA07ELEF2/EREF2/MRHF2

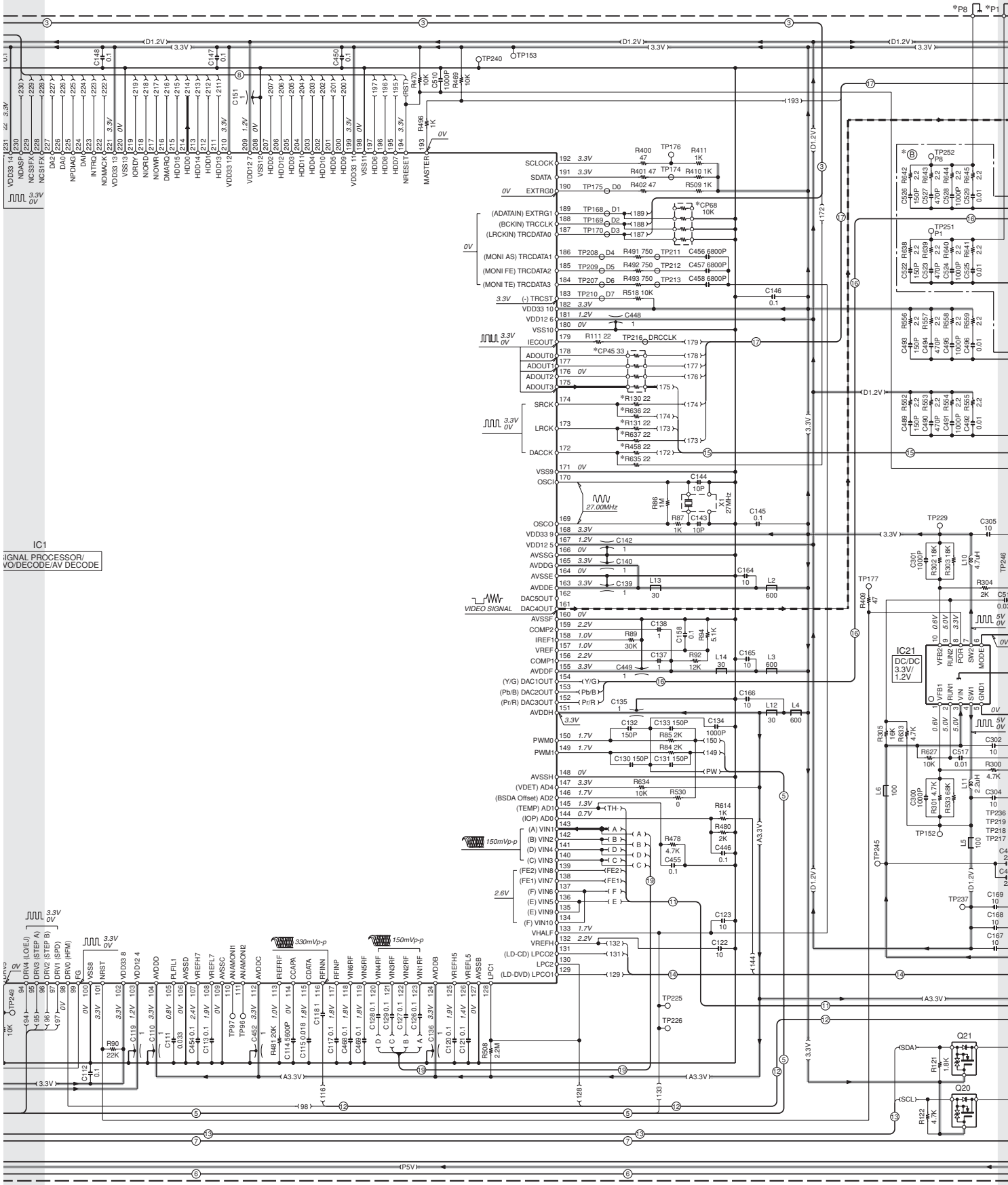

CAUTION : For continued safety, replace safety critical components only with manufacturer's recommended parts (refer to parts list). ⚠Indicates safety critical components. To reduce the risk of electric shock, leakage-current or resistance measurements shall be carried out (exposed parts are acceptably insulated from the supply circuit) before the appliance is returned to the customer.

FZDA07ELEF2/EREF2/MRHF2

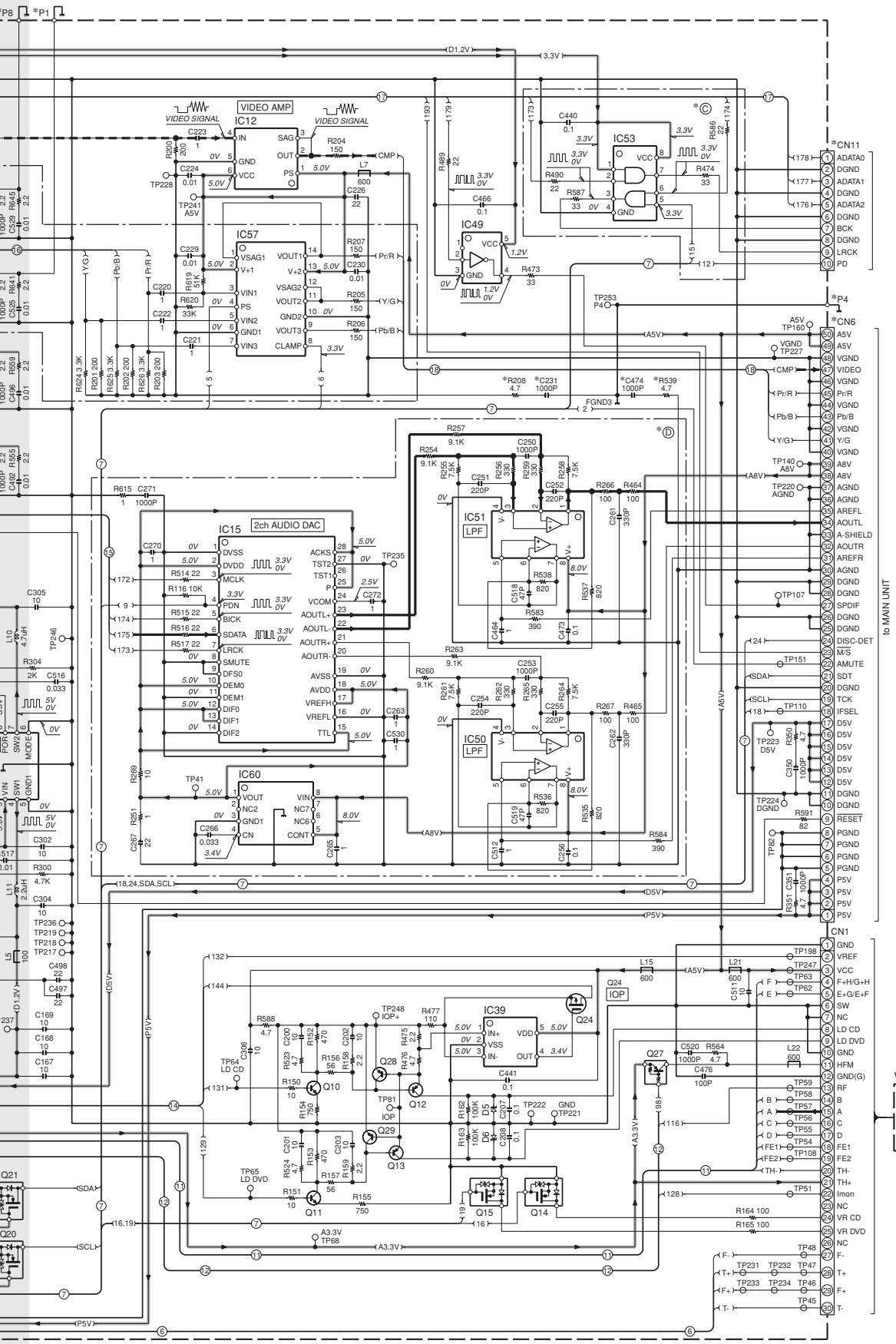

IC1 : MN2DS0016AAUB
IC5 : S29AL32D70TFI
IC9 : S-24C504AFT
IC10 : AN41250A-VB
IC12 : MM1671XNRE
IC15 : AK4396VF
IC21 : LTC3548EDD-F
IC27 : NJM2865F318ZB
IC31 : LC82360-E
IC39 : NJU7042
IC42 : TC74HC273FT
IC49 : TC7SG04FU-F
IC50,51 : NJM4580V-ZB
IC53 : TC7WH08FK-F
IC54 : IS45S16800TL1
IC55 : TC7WH32FU-F
IC56 : HD74LV1GW57AE
IC57 : NJM2573V-ZB
IC60 : MM1665AHBE

Q1-4,25 : DTA143XE
Q10,11 : 2SC4617
Q12,13 : 2SB1709
Q14,15,20,21 : 2SK3019
Q24 : SSM3J15FU-F
Q27 : DTA143ZE
Q28,29 : 2SA1774

D5,6 : 015AZ5.1-F(Y)
D7 : 1SS402-F

(X37-1120-0x) MODEL NAME	UNIT No.	Ⓐ	Ⓒ	Ⓑ	Ⓓ	C20, 231,474	C409, 410	CN6	CN10	CN11	CP45	CP88	IC27	P1,4, 7,8	R24, 208,539	R130, 635,637	R131, 458,636	R560,574-576, 617
—	0-00	YES	YES	YES	YES	YES	YES	E41-2598-05	E41-2597-05	E41-2598-05	YES	—	YES	YES	YES	YES	YES	—
—	0-01	YES	—	YES	YES	YES	YES	E41-2603-05	E41-2602-05	E41-2601-05	YES	—	YES	YES	YES	YES	YES	—
FXHD07JGF2 FZDA07JEJF2/JF2/EF2	0-02	—	—	—	—	—	—	E41-2598-05	E41-2597-05	—	—	YES	—	—	—	—	—	YES
FZDA07JEJF2/JHGF2 FZDA07MRHF2	0-03	—	YES	YES	YES	YES	—	E41-2603-05	E41-2602-05	—	YES	YES	—	YES	YES	—	YES	YES
FZDA07EREF2/ELEF2	0-04	—	—	—	YES	—	—	E41-2603-05	E41-2602-05	—	YES	YES	—	—	—	YES	YES	YES
—	0-05	—	—	—	—	YES	—	E41-2598-05	E41-2597-05	—	—	YES	—	YES	YES	—	YES	YES

- DC voltages are as measured with a high impedance voltmeter. Values may vary slightly due to variations between individual instruments or/and units.

EXPLODED VIEW (DVD MECHANISM)

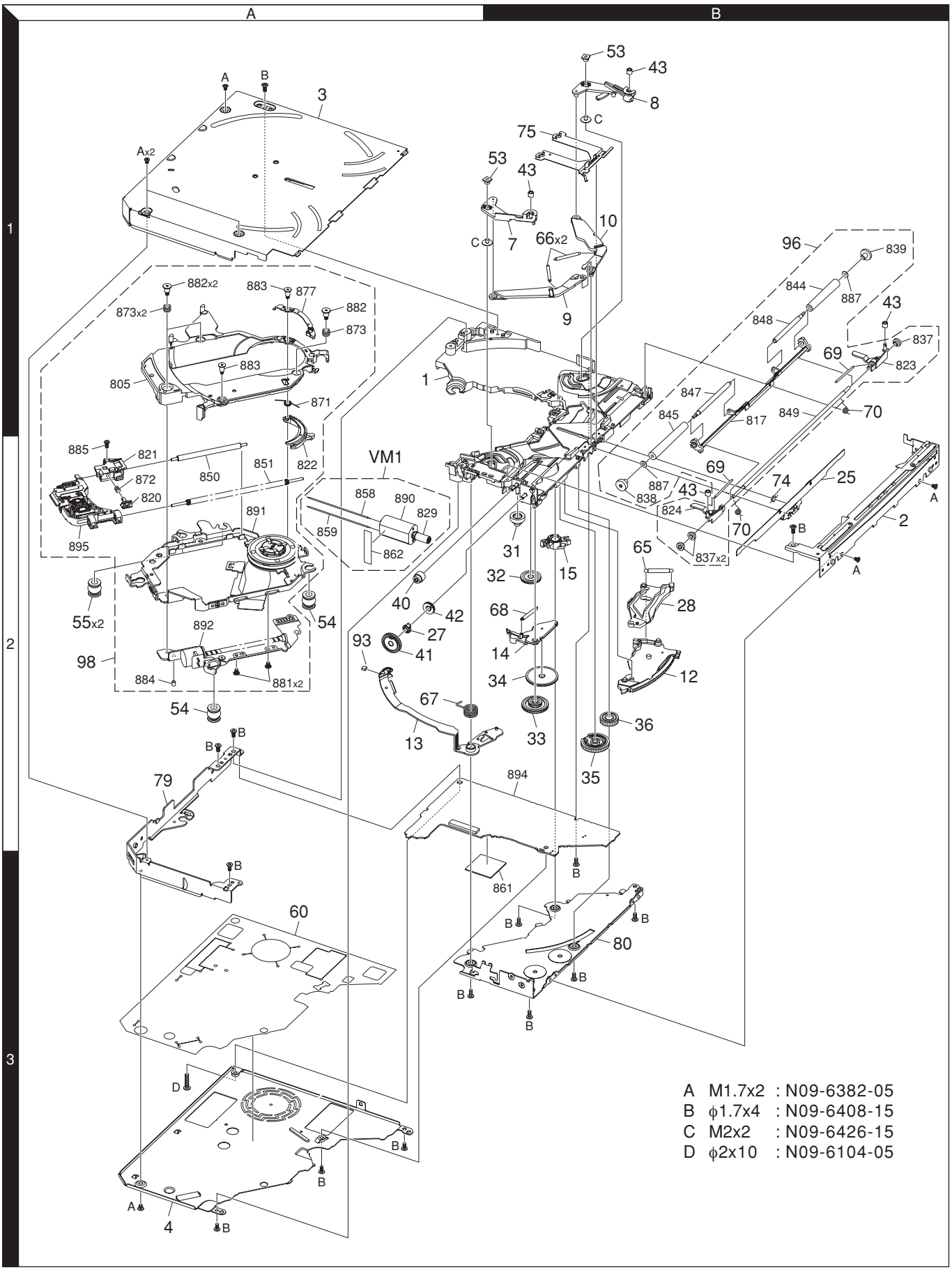

Parts with the exploded numbers larger than 700 are not supplied.

EXPLODED VIEW (for FZDA07ELEF2)

A	M2.6x14	: N09-6480-05	H	ϕ3x8	: N80-3008-48
B	M2.6x4	: N30-2604-48	J	ϕ2x6	: N82-2006-48
C	M2.6x5	: N35-2605-48	K	ϕ2.6x5	: N83-2605-48
D	ϕ2.6x5	: N86-2605-48	L	ϕ3x5	: N83-3005-48
E	ϕ2.6x8	: N86-2608-48	M	ϕ3x8	: N83-3008-48
F	ϕ2.6x20	: N86-2620-48	N	ϕ3x8	: N09-6409-05
G	ϕ3x6	: N86-3006-48			

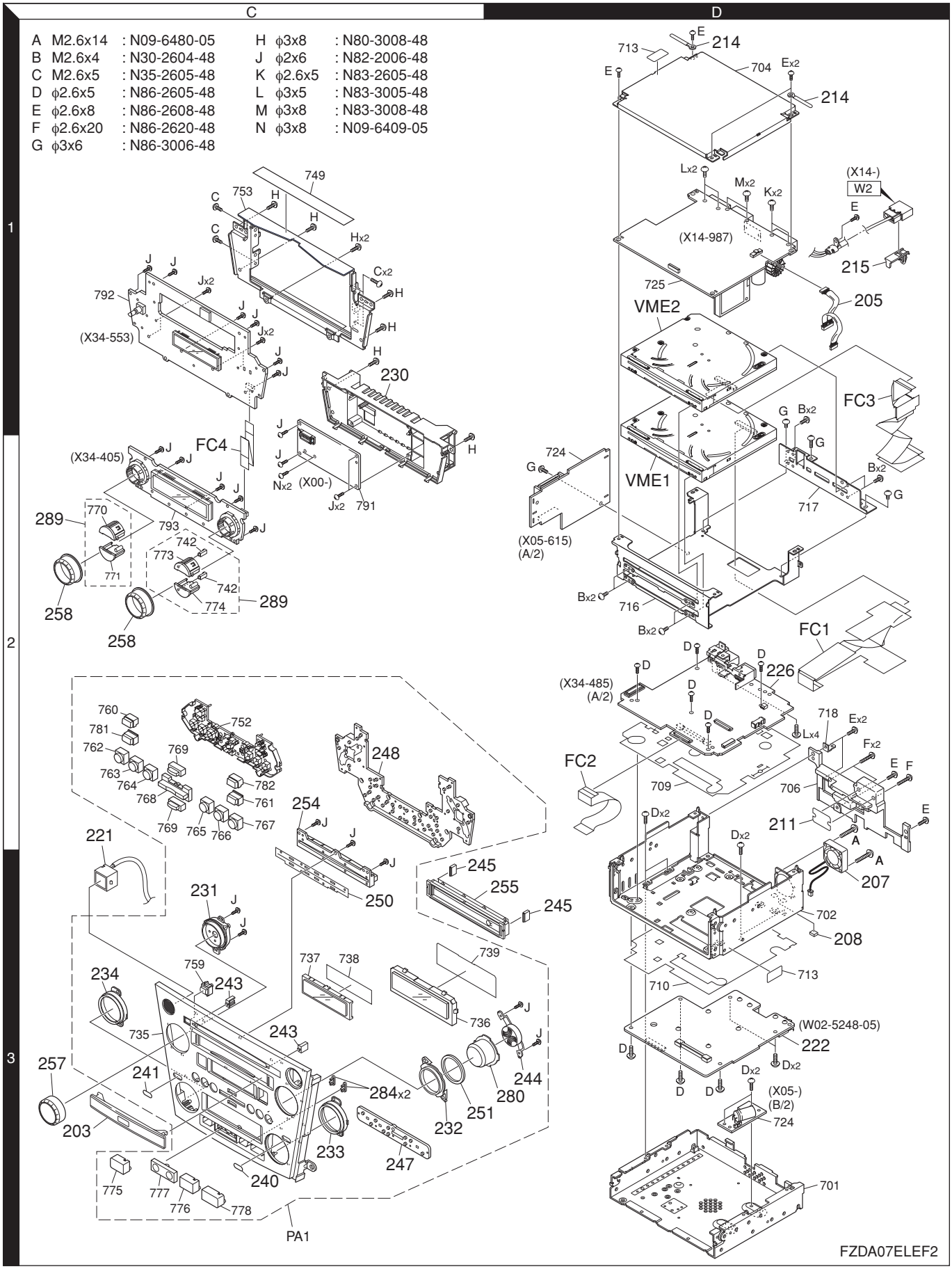

Parts with the exploded numbers larger than 700 are not supplied.

EXPLODED VIEW (for FZDA07EREF2/MRHF2)

A	M2.6x14	: N09-6480-05	H	ϕ3x8	: N80-3008-48
B	M2.6x4	: N30-2604-48	J	ϕ2x6	: N82-2006-48
C	M2.6x5	: N35-2605-48	K	ϕ2.6x5	: N83-2605-48
D	ϕ2.6x5	: N86-2605-48	L	ϕ3x5	: N83-3005-48
E	ϕ2.6x8	: N86-2608-48	M	ϕ3x8	: N83-3008-48
F	ϕ2.6x20	: N86-2620-48	N	ϕ3x8	: N09-6409-05
G	ϕ3x6	: N86-3006-48			

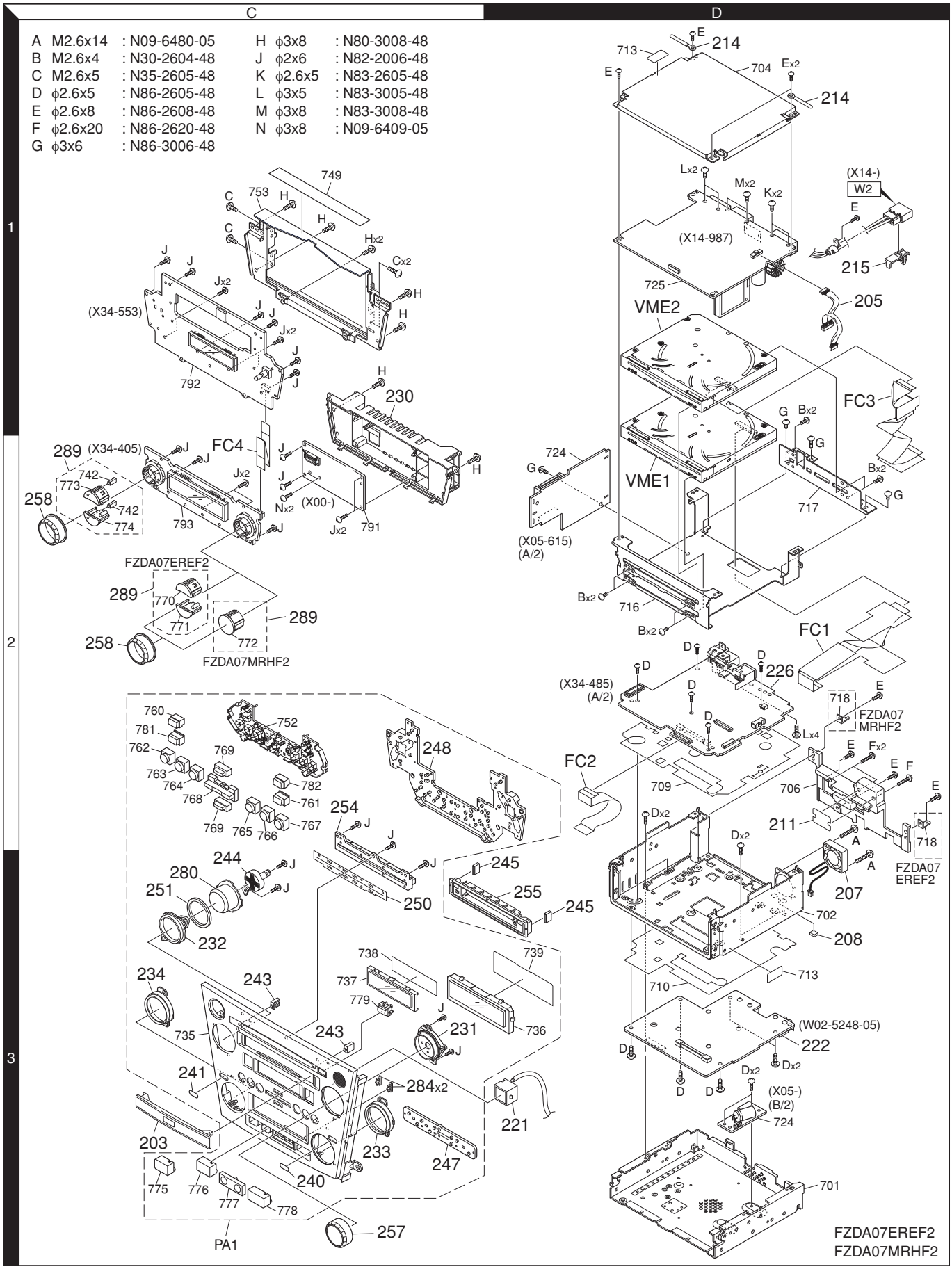

Parts with the exploded numbers larger than 700 are not supplied.

PARTS LIST

✻ New parts
Parts without **Parts No.** are not supplied.
Les articles non mentionnes dans le **Parts No.** ne sont pas fournis.
Teile ohne **Parts No.** werden nicht geliefert.

Ref. No.	Add	New	Parts No.	Description	Destination
FZDA07ELEF2/EREF2/MRHF2					
203	3C	✻	A21-6616-13	DRESSING PANEL ASSY (DVD)	
205	1D	✻	E39-0899-25	WIRING HARNESS	
FC1	2D	✻	E39-0901-15	FLAT CABLE	
FC2	2D	✻	E39-0930-05	FLAT CABLE	
FC3	1D	✻	E39-0961-05	FLAT CABLE	
207	2D	✻	F09-2877-05	FAN	
208	3D	✻	F12-0948-14	SHIELDING TUBE	
211	2D	✻	F20-2408-04	INSULATING SHEET	
214	1D	✻	J11-0670-05	CLAMPER	
215	2D		J19-5188-05	HOLDER	M1E1
215	2D		J19-7142-05	HOLDER	E2
A	2D	✻	N09-6480-05	MACHINE SCREW (M2.6X14)	
B	2D		N30-2604-48	PAN HEAD MACHINE SCREW	
C	1C		N35-2605-48	BINDING HEAD MACHINE SCREW	
D	2D		N86-2605-48	BINDING HEAD TAPTITE SCREW	
E	1D		N86-2608-48	BINDING HEAD TAPTITE SCREW	
F	2D	✻	N86-2620-48	BINDING HEAD TAPTITE SCREW	
G	1D		N86-3006-48	BINDING HEAD TAPTITE SCREW	
221	3C	✻	W01-1693-05	MICROPHONE	
222	3D	✻	W02-5248-05	ELECTRIC CIRCUIT MODULE (NAVI)	
226	2D	✻	X34-4850-22	ELECTRIC UNIT	M1
226	2D	✻	X34-4852-72	ELECTRIC UNIT	E1
226	2D	✻	X34-4852-73	ELECTRIC UNIT	E2
VME1	1D	✻	X92-5500-00	DVD MECHANISM ASSY (DVS-8000V)	
VME2	1D	✻	X92-5910-01	DVD MECHANISM ASSY (DVS-8521V)	
CONTROL ASSY (X90-427x-xx)					
230	1C		A02-2748-11	PLASTIC CABINET	
231	3C		A21-4650-23	DRESSING PANEL	M1E1
231	3C	✻	A21-4651-23	DRESSING PANEL	E2
232	3C		A21-4652-03	DRESSING PANEL	M1E1
232	3C		A21-4653-03	DRESSING PANEL	E2
233	3C		A21-4654-03	DRESSING PANEL	
234	3C		A21-4655-03	DRESSING PANEL	
PA1	3C	✻	Y33-2870-21	PANEL ASSY	M1
PA1	3C	✻	Y33-2872-71	PANEL ASSY	E1
PA1	3C	✻	Y33-2872-72	PANEL ASSY	E2
240	3C		B12-1233-14	INDICATOR	
241	3C		B12-1234-14	INDICATOR	M1
243	3C		B19-2378-04	LIGHTING BOARD	
244	3D		B19-2379-03	LIGHTING BOARD	M1E1
244	3D		B19-2380-03	LIGHTING BOARD	E2
245	3C	✻	B19-2450-34	LIGHTING BOARD	
247	3C		E29-2073-03	CONDUCTIVE RUBBER	M1E1
247	3C		E29-2077-03	CONDUCTIVE RUBBER	E2
248	2C	✻	E29-2110-01	CONDUCTIVE RUBBER	
FC4	2C		E39-0790-05	FLAT CABLE	
250	3C		F19-1472-03	BLIND PLATE	
251	3C		G11-3682-04	CUSHION	

Ref. No.	Add	New	Parts No.	Description	Destination
254	2C	✻	J90-1149-03	GUIDE	
255	3C	✻	J90-1155-13	GUIDE ASSY	
257	3C		K23-1103-13	KNOB (VOL)	
258	2C		K23-1104-03	KNOB (TEMP)	
280	3C	✻	K24-4740-03	PUSH KNOB (AM/FM)	M1E1
280	3C	✻	K24-4741-03	PUSH KNOB (AM/FM)	E2
284	3C		K28-0117-04	KNOB BASE	
289	2C		K28-0157-13	KNOB SET	E1E2
289	2C		K28-0158-13	KNOB SET	M1
H	1C		N80-3008-48	PAN HEAD TAPTITE SCREW	
J	1C		N82-2006-48	BINDING HEAD TAPTITE SCREW	
POWER SUPPLY UNIT (X00-4100-00)					
C21-24			CK73GB1H102K	CHIP C 1000PF K	
C25,26			CK73GB1H472K	CHIP C 4700PF K	
C27,28			CK73GB1H222K	CHIP C 2200PF K	
C33			CK73GB1H104K	CHIP C 0.10UF K	
C41			CK73GB1H104K	CHIP C 0.10UF K	
C42			CD04BJ1H220M	ELECTRO 22UF 50WV	
C44			CD04AS1C101M	ELECTRO 100UF 16WV	
C53			CD04AR1C221M	ELECTRO 220UF 16WV	
C61			CD04BJ1H220M	ELECTRO 22UF 50WV	
C62			CD04AS1C101M	ELECTRO 100UF 16WV	
C64			CD04BJ1E101M	ELECTRO 100UF 25WV	
C71			CK73GB1H102K	CHIP C 1000PF K	
C72			CK73GB1H473K	CHIP C 0.047UF K	
C73			CK73GB1H103K	CHIP C 0.010UF K	
CN1			E41-2632-05	PIN ASSY	
J1			E58-1047-05	RECTANGULAR RECEPTACLE	
L41			L33-2307-05	CHOKE COIL	
L51			L33-2203-15	CHOKE COIL	
L61			L33-2203-15	CHOKE COIL	
N	2C		N09-6409-05	TAPTITE SCREW (BT 3X8)	
R21-23			RK73EB2E102J	CHIP R 1.0K J 1/4W	
R24			RK73EB2E472J	CHIP R 4.7K J 1/4W	
R25			RK73GB2A103J	CHIP R 10K J 1/10W	
R26,27			RK73EB2E152J	CHIP R 1.5K J 1/4W	
R33			RK73EB2E391J	CHIP R 390 J 1/4W	
R34			RK73GB2A2R2J	CHIP R 2.2 J 1/10W	
R41			RK73EB2E122J	CHIP R 1.2K J 1/4W	
R42			RK73EB2E220J	CHIP R 22 J 1/4W	
R51			RK73EB2E102J	CHIP R 1.0K J 1/4W	
R52,53			RK73EB2E221J	CHIP R 220 J 1/4W	
R56			RK73GB2A681J	CHIP R 680 J 1/10W	
R57			RK73EB2E152J	CHIP R 1.5K J 1/4W	
R61,62			RK73EB2E4R7J	CHIP R 4.7 J 1/4W	
R63			RK73EB2E471J	CHIP R 470 J 1/4W	
R64			RK73EB2E101J	CHIP R 100 J 1/4W	
R70			RK73GB2A223J	CHIP R 22K J 1/10W	
R71			RK73EB2E561J	CHIP R 560 J 1/4W	
R72			RK73GB2A472J	CHIP R 4.7K J 1/10W	
R73			RK73GB2A102J	CHIP R 1.0K J 1/10W	
R74			RK73GB2A183J	CHIP R 18K J 1/10W	

E1 : FZDA07EREF2 **E2** : FZDA07ELEF2 (Europe)
M1 : FZDA07MRHF2 (Other Areas)

⚠Indicates safety critical components.

PARTS LIST

POWER SUPPLY UNIT (X00-4100-00)

Ref. No.	Add	New	Parts No.	Description				Destination
R75			RK73GB2A472J	CHIP R	4.7K	J	1/10W	
R76			RK73GB2A391J	CHIP R	390	J	1/10W	
R77			RK73GB2A432J	CHIP R	4.3K	J	1/10W	
R79			RD14BB2C682J	RD	6.8K	J	1/6W	
R80			RD14BB2C123J	RD	12K	J	1/6W	
R81,82			RK73EB2E202J	CHIP R	2.0K	J	1/4W	
R101,102			RK73EB2E000J	CHIP R	0.0	J	1/4W	
D21			HZS7L-E (A3)	ZENER DIODE				
D22			1SS133	DIODE				
D23			HZS7L-E (B2)	ZENER DIODE				
D24			1SS133	DIODE				
D31			1SS133	DIODE				
D32			HZS9L-E (B2)	ZENER DIODE				
D41			1SR154-400	DIODE				
D42			1SS133	DIODE				
D43			UDZS5.1B	ZENER DIODE				
D51			RB160L-40	DIODE				
D52			1SS133	DIODE				
D61			HZS11L-E (A3)	ZENER DIODE				
D62			1SR154-400	DIODE				
D71-73			1SS133	DIODE				
D74			UDZS5.6B	ZENER DIODE				
Q31			2SD1858	TRANSISTOR				
Q41			2SD1858	TRANSISTOR				
Q51			2SB1443	TRANSISTOR				
Q53			2SB1443	TRANSISTOR				
Q54			2SC4081	TRANSISTOR				
Q55			DTA124EUA	DIGITAL TRANSISTOR				
Q61			2SB1443	TRANSISTOR				
Q62			2SC4081	TRANSISTOR				
Q71			2SC4081	TRANSISTOR				
Q72			QSL12	TRANSISTOR				
Q73			2SA1576A	TRANSISTOR				
TUNER UNIT (X05-6150-62)								
C1		✻	C90-6843-05	ELECTRO	3300UF		16WV	
CN1		✻	E41-2853-05	PIN ASSY				
CN401		✻	E41-2820-05	PIN ASSY				
CN402		✻	E41-2832-05	PIN ASSY				
R1			RK73GB2A103J	CHIP R	10K	J	1/10W	
R2			RK73GB2A000J	CHIP R	0.0	J	1/10W	
Q1			DTA124EUA	DIGITAL TRANSISTOR				
Q2			DTC124EUA	DIGITAL TRANSISTOR				
SYNTHESIZER UNIT (X14-987x-xx)								
C2,3			CK73GB1H104K	CHIP C	0.10UF		K	
C4			CE32BE0J101M	CHIP EL	100UF		6.3WV	
C5		✻	CE32BE1E470M	CHIP EL	47UF		25WV	
C6			CE32BF1C101M	CHIP EL	100UF		16WV	
C8			CK73GB0J225K	CHIP C	2.2UF		K	
C9			CK73GB1H103K	CHIP C	0.010UF		K	
C10			CK73GB0J225K	CHIP C	2.2UF		K	
C11			CK73EB1H474K	CHIP C	0.47UF		K	
C12		✻	CE32BE1E470M	CHIP EL	47UF		25WV	

Ref. No.	Add	New	Parts No.	Description				Destination
C14,15			CE32BF1C101M	CHIP EL	100UF		16WV	
C16			CE32CL0J470M	CHIP EL	47UF		6.3WV	
C17			CE32BF1C101M	CHIP EL	100UF		16WV	
C18,19			CE32BF1E331M	CHIP EL	330UF		25WV	
C20			CK73GB1A105K	CHIP C	1.0UF		K	
C21			CK73GB0J475K	CHIP C	4.7UF		K	
C22,23			CK73GB1H222K	CHIP C	2200PF		K	
C24			CE32BF1C101M	CHIP EL	100UF		16WV	
C40			CK73GB1H103K	CHIP C	0.010UF		K	
C50			CC73GCH1H070D	CHIP C	7.0PF		D	
C51			C90-6794-05	ELECTRO	6800UF		16WV	
C52			CK73GB1H152K	CHIP C	1500PF		K	
C53			CK73GB1H103K	CHIP C	0.010UF		K	
C54,55			CK73GB1H104K	CHIP C	0.10UF		K	
C100,101			CC73GCH1H221J	CHIP C	220PF		J	M1
C102,103			CE32BE1C100M	CHIP EL	10UF		16WV	
C107			CE32BE1C100M	CHIP EL	10UF		16WV	
C108		✻	CE32BE1C470M	CHIP EL	47UF		16WV	
C112			CE32BE1C100M	CHIP EL	10UF		16WV	
C114			CC73GCH1H271J	CHIP C	270PF		J	
C115			CE32BE1C100M	CHIP EL	10UF		16WV	
C116,117			CC73GCH1H180J	CHIP C	18PF		J	
C120			CK73GB1C224K	CHIP C	0.22UF		K	M1
C122			CK73GB1H473K	CHIP C	0.047UF		K	M1
C123			CK73GB1H153K	CHIP C	0.015UF		K	
C132			CK73GB1H682K	CHIP C	6800PF		K	
C133			CK73GB1H103K	CHIP C	0.010UF		K	
C149,150			CK73GB1H103K	CHIP C	0.010UF		K	M1
C151			CE32BE1C100M	CHIP EL	10UF		16WV	M1
C152			CK73GB1H392K	CHIP C	3900PF		K	M1
C153			CK73GB1H103K	CHIP C	0.010UF		K	M1
C154			CC73GCH1H471J	CHIP C	470PF		J	M1
C155			CK73GB1H333K	CHIP C	0.033UF		K	M1
C301-303			CE32BE1C100M	CHIP EL	10UF		16WV	
C304		✻	CE32BF1E221M	CHIP EL	220UF		25WV	
C314			CE32BE1C100M	CHIP EL	10UF		16WV	
C315,316			CC73GCH1H101J	CHIP C	100PF		J	
C319,320			CK73FB1E474K	CHIP C	0.47UF		K	
C325,326			CK73GB1H104K	CHIP C	0.10UF		K	
C327,328			CK73GB1H102K	CHIP C	1000PF		K	
C330-333			CK73GB1H104K	CHIP C	0.10UF		K	
C334,335			CE32BF1C101M	CHIP EL	100UF		16WV	
C336,337			CK73GB1H102K	CHIP C	1000PF		K	
C341,342			CE32BE1C100M	CHIP EL	10UF		16WV	
C344			C90-6780-05	ELECTRO	1UF		16WV	
C345,346			CK73GB1A105K	CHIP C	1.0UF		K	
C354			CC73GCH1H271J	CHIP C	270PF		J	
C355			CC73GCH1H471J	CHIP C	470PF		J	
C357-359			CC73GCH1H271J	CHIP C	270PF		J	
C360			CC73GCH1H151J	CHIP C	150PF		J	
C361			CC73GCH1H471J	CHIP C	470PF		J	
C363,364			CC73GCH1H151J	CHIP C	150PF		J	
C365,366			CK73GB1H102K	CHIP C	1000PF		K	
C368			CC73GCH1H151J	CHIP C	150PF		J	
C369,370			CK73GB1H102K	CHIP C	1000PF		K	

E1 : FZDA07EREF2 **E2** : FZDA07ELEF2 (Europe)
M1 : FZDA07MRHF2 (Other Areas)

⚠Indicates safety critical components.

PARTS LIST

SYNTHESIZER UNIT (X14-987x-xx)

Ref. No.	Add	New	Parts No.	Description			Destination
C371-374			C90-6777-05	ELECTRO	0.22UF	16WV	
C375-390			CC73GCH1H150J	CHIP C	15PF	J	
C391-398			CE32BE1C100M	CHIP EL	10UF	16WV	
C399		✻	CE32BE1C220M	CHIP EL	22UF	16WV	
C400,401			CK73GB1H102K	CHIP C	1000PF	K	
C402		✻	CE32BE1C220M	CHIP EL	22UF	16WV	
C406			CC73GCH1H150J	CHIP C	15PF	J	
C410-412			CC73GCH1H150J	CHIP C	15PF	J	
C414			CK73GB1H472K	CHIP C	4700PF	K	
C415,416			CE32BE1C100M	CHIP EL	10UF	16WV	
C417		✻	CE32BE1C220M	CHIP EL	22UF	16WV	
C419,420			CK73GB1A105K	CHIP C	1.0UF	K	
C517-519			CK73GB1H104K	CHIP C	0.10UF	K	
C521,522			CK73GB1H104K	CHIP C	0.10UF	K	
C523			CE32BE1C100M	CHIP EL	10UF	16WV	
C524,525			CK73GB1H104K	CHIP C	0.10UF	K	
C527,528			CE32BE1C100M	CHIP EL	10UF	16WV	
C534			CE32BE1C100M	CHIP EL	10UF	16WV	
C535-538			CK73GB1H104K	CHIP C	0.10UF	K	
C539			CK73GB1H103K	CHIP C	0.010UF	K	
C541			CK73GB1H104K	CHIP C	0.10UF	K	
C546			CK73GB1H104K	CHIP C	0.10UF	K	
C547,548			CE32BE1C100M	CHIP EL	10UF	16WV	
C550			CE32BE1C100M	CHIP EL	10UF	16WV	
C552			CE32BE1C100M	CHIP EL	10UF	16WV	
C553			CK73GB1H104K	CHIP C	0.10UF	K	
C554,555			CC73GCH1H180J	CHIP C	18PF	J	
C557		✻	CE32AU1A100M	CHIP EL	10UF	10WV	
C558			CK73GB1H104K	CHIP C	0.10UF	K	
C559,560			CK73GB1H102K	CHIP C	1000PF	K	
C565			CC73GCH1H330J	CHIP C	33PF	J	
C566			CK73GB1H222K	CHIP C	2200PF	K	
C607-609			CK73GB1H104K	CHIP C	0.10UF	K	
C610		✻	CE32BE1V4R7M	CHIP EL	4.7UF	35WV	
C611,612			CC73GCH1H270J	CHIP C	27PF	J	
C613			CK73GB1H103K	CHIP C	0.010UF	K	
C614			CE32BE0J101M	CHIP EL	100UF	6.3WV	
C615			CK73GB1H104K	CHIP C	0.10UF	K	
C618,619			CC73GCH1H821J	CHIP C	820PF	J	
C622			CK73GB1H104K	CHIP C	0.10UF	K	
C624			CK73GB1H102K	CHIP C	1000PF	K	
C627			CK73GB1H102K	CHIP C	1000PF	K	
C628			CC73GCH1H100D	CHIP C	10PF	D	
C631			CK73GB1H104K	CHIP C	0.10UF	K	
C900-903			CK73GB1H222K	CHIP C	2200PF	K	
C907		✻	CE32BE1C470M	CHIP EL	47UF	16WV	
C908,909		✻	CE32BE1HR47M	CHIP EL	0.47UF	50WV	
C910,911			CK73GB1H222K	CHIP C	2200PF	K	
C912,913			CC73GCH1H221J	CHIP C	220PF	J	
C914			CK73GB1H222K	CHIP C	2200PF	K	
C916-918			CK73GB1H222K	CHIP C	2200PF	K	
C919,920			CC73GCH1H221J	CHIP C	220PF	J	
C921,922		✻	CE32BE1HR47M	CHIP EL	0.47UF	50WV	
C923		✻	CE32BE1C470M	CHIP EL	47UF	16WV	
C925-927			CK73GB1H222K	CHIP C	2200PF	K	

Ref. No.	Add	New	Parts No.	Description				Destination
C928			CK73GB1H104K	CHIP C	0.10UF	K		
C929-931			CK73GB1H222K	CHIP C	2200PF	K		
C932			CK73GB1H104K	CHIP C	0.10UF	K		
C933,934			CK73GB1H222K	CHIP C	2200PF	K		
C935			CK73GB1A105K	CHIP C	1.0UF	K		
C936,937		✻	CE32BE1C470M	CHIP EL	47UF	16WV		
C941-948			CK73GB1H332K	CHIP C	3300PF	K		
CN1		✻	E41-2845-05	PIN ASSY				
CN2		✻	E41-2830-05	PIN ASSY				
CN3			E41-1635-05	PIN ASSY				
J1			E58-0985-05	RECTANGULAR RECEPTACLE				
J2			E58-0930-05	RECTANGULAR RECEPTACLE				
J3		✻	E58-1059-05	RECTANGULAR RECEPTACLE				
W2		✻	E30-6724-15	CORD WITH PLUG (ANT)				M1
W2		✻	E30-6725-15	CORD WITH PLUG (ANT)				E1E2
F1			F53-0402-05	FUSE (UL,CSA) 1A				
F2			F53-0404-05	FUSE (UL,CSA) 10A				
F3			F53-0402-05	FUSE (UL,CSA) 1A				
F900			F53-0306-05	FUSE (UL,CSA) 5A				
L50		✻	L33-2371-05	CHOKE COIL				
L101			L41-4795-33	SMALL FIXED INDUCTOR (4.7U)				M1
L102		✻	L33-2372-05	SMALL FIXED INDUCTOR				M1
L502		✻	L92-0649-05	CHIP FERRITE				
L503,504			L92-0373-05	CHIP FERRITE				
L505,506			L92-0330-05	CHIP FERRITE				
L900		✻	L79-0997-05	LINE FILTER				
X100			L77-2838-05	CRYSTAL RESONATOR (4.332M)				
X502		✻	L77-2951-05	CRYSTAL RESONATOR (12.00MHZ)				
X600		✻	L77-2947-05	CRYSTAL RESONATOR (3.932160MHZ)				
K	1D		N83-2605-48	PAN HEAD TAPTITE SCREW				
L	1D		N83-3005-48	PAN HEAD TAPTITE SCREW				
M	1D		N83-3008-48	PAN HEAD TAPTITE SCREW				
CP300,301			RK74GB1J104J	CHIP-COM	100K	J	1/16W	
CP302			RK74GA1J104J	CHIP-COM	100K	J	1/16W	
R1			RK73EB2E1R0J	CHIP R	1.0	J	1/4W	
R2,3			RK73EB2E222J	CHIP R	2.2K	J	1/4W	
R4			RK73GB2A100J	CHIP R	10	J	1/10W	
R5			RK73GB2A104J	CHIP R	100K	J	1/10W	
R6			RK73GB2A273J	CHIP R	27K	J	1/10W	
R7			RK73EB2E100J	CHIP R	10	J	1/4W	
R8			RK73GB2A623J	CHIP R	62K	J	1/10W	
R9,10			RK73EB2E8R2J	CHIP R	8.2	J	1/4W	
R11			RK73EB2E103J	CHIP R	10K	J	1/4W	
R12			RK73GB2A103J	CHIP R	10K	J	1/10W	
R13			RK73GB2A202J	CHIP R	2.0K	J	1/10W	
R14			RK73GB2A224J	CHIP R	220K	J	1/10W	
R16			RK73GH2A753D	CHIP R	75K	D	1/10W	
R17			RK73GH2A103D	CHIP R	10K	D	1/10W	
R18			RK73GH2A242D	CHIP R	2.4K	D	1/10W	
R19			RK73GB2A103J	CHIP R	10K	J	1/10W	
R20			RK73GH2A103D	CHIP R	10K	D	1/10W	
R21			RK73GH2A683D	CHIP R	68K	D	1/10W	
R22			RK73GH2A103D	CHIP R	10K	D	1/10W	

E1 : FZDA07EREF2 **E2** : FZDA07ELEF2 (Europe)
M1 : FZDA07MRHF2 (Other Areas)

⚠Indicates safety critical components.

PARTS LIST

SYNTHESIZER UNIT (X14-987x-xx)

Ref. No.	Add	New	Parts No.	Description				Destination
R23			RK73EB2E1R0J	CHIP R	1.0	J	1/4W	
R27,28			RK73GB2A223J	CHIP R	22K	J	1/10W	
R29,30			RK73GB2A101J	CHIP R	100	J	1/10W	
R31			RK73EB2E100J	CHIP R	10	J	1/4W	
R32,33			RK73GB2A101J	CHIP R	100	J	1/10W	
R34-38			RK73GB2A223J	CHIP R	22K	J	1/10W	
R44			RK73GH2A153D	CHIP R	15K	D	1/10W	
R45			RK73GB2A332J	CHIP R	3.3K	J	1/10W	
R46			RK73EB2E101J	CHIP R	100	J	1/4W	
R48			RK73GB2A000J	CHIP R	0.0	J	1/10W	
R49			RK73GB2A202J	CHIP R	2.0K	J	1/10W	
R50			RK73GB2A103J	CHIP R	10K	J	1/10W	
R51			RK73GB2A273J	CHIP R	27K	J	1/10W	
R52			RK73GB2A133J	CHIP R	13K	J	1/10W	
R53			RK73GB2A103J	CHIP R	10K	J	1/10W	
R54			RK73GB2A273J	CHIP R	27K	J	1/10W	
R55			RK73EB2E152J	CHIP R	1.5K	J	1/4W	
R56			RK73GB2A222J	CHIP R	2.2K	J	1/10W	
R57			RK73GB2A133J	CHIP R	13K	J	1/10W	
R58			RK73EB2E152J	CHIP R	1.5K	J	1/4W	
R101			RK73GB2A000J	CHIP R	0.0	J	1/10W	E1E2
R103-105			RK73GB2A2R2J	CHIP R	2.2	J	1/10W	
R106			RK73GB2A000J	CHIP R	0.0	J	1/10W	M1
R108,109			RK73GB2A222J	CHIP R	2.2K	J	1/10W	
R110			RK73GB2A1R0J	CHIP R	1.0	J	1/10W	
R112			RK73GB2A2R2J	CHIP R	2.2	J	1/10W	
R113			RK73GB2A102J	CHIP R	1.0K	J	1/10W	
R115			RK73GB2A222J	CHIP R	2.2K	J	1/10W	M1
R120,121			RK73GB2A222J	CHIP R	2.2K	J	1/10W	M1
R122			RK73GB2A683J	CHIP R	68K	J	1/10W	M1
R123			RK73GB2A2R2J	CHIP R	2.2	J	1/10W	M1
R124,125			RK73GB2A104J	CHIP R	100K	J	1/10W	M1
R126			RK73GB2A392J	CHIP R	3.9K	J	1/10W	
R129			RK73GB2A102J	CHIP R	1.0K	J	1/10W	
R136			RK73GH2A203D	CHIP R	20K	D	1/10W	
R147,148			RK73GB2A104J	CHIP R	100K	J	1/10W	M1
R149			RK73GB2A561J	CHIP R	560	J	1/10W	M1
R150			RK73GB2A222J	CHIP R	2.2K	J	1/10W	M1
R152			RK73GB2A103J	CHIP R	10K	J	1/10W	
R156			RK73GB2A000J	CHIP R	0.0	J	1/10W	
R157			RK73GB2A183J	CHIP R	18K	J	1/10W	
R158			RK73GB2A473J	CHIP R	47K	J	1/10W	
R301			RK73GH2A682D	CHIP R	6.8K	D	1/10W	
R304			RK73GH2A681D	CHIP R	680	D	1/10W	
R305			RK73GH2A182D	CHIP R	1.8K	D	1/10W	
R306,307			RK73GB2A102J	CHIP R	1.0K	J	1/10W	
R308			RK73GH2A223D	CHIP R	22K	D	1/10W	
R309			RK73GH2A163D	CHIP R	16K	D	1/10W	
R311			RK73GB2A104J	CHIP R	100K	J	1/10W	
R312			RK73GB2A223J	CHIP R	22K	J	1/10W	
R313			RK73GB2A153J	CHIP R	15K	J	1/10W	
R314			RK73GB2A334J	CHIP R	330K	J	1/10W	
R315			RK73GB2A824J	CHIP R	820K	J	1/10W	
R316			RK73GB2A154J	CHIP R	150K	J	1/10W	
R328,329			RK73GB2A750J	CHIP R	75	J	1/10W	

Ref. No.	Add	New	Parts No.	Description				Destination
R335			RK73GB2A154J	CHIP R	150K	J	1/10W	
R336			RK73GB2A824J	CHIP R	820K	J	1/10W	
R337			RK73GB2A101J	CHIP R	100	J	1/10W	
R338			RK73GH2A472D	CHIP R	4.7K	D	1/10W	
R339,340			RK73GB2A105J	CHIP R	1.0M	J	1/10W	
R341			RK73GB2A471J	CHIP R	470	J	1/10W	
R342			RK73EB2E221J	CHIP R	220	J	1/4W	
R343			RK73GB2A334J	CHIP R	330K	J	1/10W	
R344			RK73GB2A220J	CHIP R	22	J	1/10W	
R347			RK73GB2A111J	CHIP R	110	J	1/10W	
R348			RK73GH2A472D	CHIP R	4.7K	D	1/10W	
R349,350			RK73GH2A223D	CHIP R	22K	D	1/10W	
R351			RK73GH2A472D	CHIP R	4.7K	D	1/10W	
R352-357			RK73GB2A151J	CHIP R	150	J	1/10W	
R358			RK73EB2E000J	CHIP R	0.0	J	1/4W	
R362,363			RK73GB2A104J	CHIP R	100K	J	1/10W	
R364,365			RK73GB2A000J	CHIP R	0.0	J	1/10W	
R368-370			RK73GB2A103J	CHIP R	10K	J	1/10W	
R373			RK73GB2A330J	CHIP R	33	J	1/10W	
R374			RK73GB2A154J	CHIP R	150K	J	1/10W	
R376			RK73GH2A223D	CHIP R	22K	D	1/10W	
R377			RK73GH2A472D	CHIP R	4.7K	D	1/10W	
R378			RK73GB2A111J	CHIP R	110	J	1/10W	
R379			RK73GH2A472D	CHIP R	4.7K	D	1/10W	
R380			RK73GH2A223D	CHIP R	22K	D	1/10W	
R383,384			RK73GB2A101J	CHIP R	100	J	1/10W	
R385			RK73GB2A103J	CHIP R	10K	J	1/10W	
R386			RK73GB2A154J	CHIP R	150K	J	1/10W	
R387,388			RK73GB2A472J	CHIP R	4.7K	J	1/10W	
R389,390			RK73GH2A222D	CHIP R	2.2K	D	1/10W	
R391			RK73GH2A752D	CHIP R	7.5K	D	1/10W	
R392,393			RK73GH2A153D	CHIP R	15K	D	1/10W	
R394,395			RK73GH2A222D	CHIP R	2.2K	D	1/10W	
R396-398			RK73GH2A752D	CHIP R	7.5K	D	1/10W	
R399			RK73GB2A103J	CHIP R	10K	J	1/10W	
R400,401			RK73GH2A153D	CHIP R	15K	D	1/10W	
R402-404			RK73GB2A222J	CHIP R	2.2K	J	1/10W	
R405-409			RK73GB2A103J	CHIP R	10K	J	1/10W	
R410			RK73GB2A222J	CHIP R	2.2K	J	1/10W	
R411,412			RK73GB2A103J	CHIP R	10K	J	1/10W	
R413,414			RK73GB2A111J	CHIP R	110	J	1/10W	
R415,416			RK73GB2A101J	CHIP R	100	J	1/10W	
R417			RK73EB2E471J	CHIP R	470	J	1/4W	
R418			RK73GB2A471J	CHIP R	470	J	1/10W	
R420,421			RK73GB2A223J	CHIP R	22K	J	1/10W	
R422			RK73GB2A471J	CHIP R	470	J	1/10W	
R424			RK73GB2A103J	CHIP R	10K	J	1/10W	
R426			RK73GB2A103J	CHIP R	10K	J	1/10W	
R433			RK73GB2A103J	CHIP R	10K	J	1/10W	
R435			RK73GH2A563D	CHIP R	56K	D	1/10W	
R437			RK73GB2A103J	CHIP R	10K	J	1/10W	
R440			RK73GB2A103J	CHIP R	10K	J	1/10W	
R451			RK73GB2A331J	CHIP R	330	J	1/10W	
R514			RK73GB2A1R0J	CHIP R	1.0	J	1/10W	
R523			RK73GB2A330J	CHIP R	33	J	1/10W	

E1 : FZDA07EREF2 **E2** : FZDA07ELEF2 (Europe)
M1 : FZDA07MRHF2 (Other Areas)

⚠Indicates safety critical components.

PARTS LIST

SYNTHESIZER UNIT (X14-987x-xx)

Ref. No.	Add	New	Parts No.	Description				Destination
R524,525			RK73GB2A360J	CHIP R	36	J	1/10W	
R526			RK73GB2A103J	CHIP R	10K	J	1/10W	
R527			RK73GB2A470J	CHIP R	47	J	1/10W	
R528			RK73GB2A220J	CHIP R	22	J	1/10W	
R529			RK73GB2A103J	CHIP R	10K	J	1/10W	
R530			RK73GB2A330J	CHIP R	33	J	1/10W	
R531,532			RK73GB2A750J	CHIP R	75	J	1/10W	
R533			RK73GB2A220J	CHIP R	22	J	1/10W	
R534			RK73GB2A470J	CHIP R	47	J	1/10W	
R535			RK73GB2A102J	CHIP R	1.0K	J	1/10W	
R536-538			RK73GB2A620J	CHIP R	62	J	1/10W	
R539,540			RK73GB2A470J	CHIP R	47	J	1/10W	
R541,542			RK73GB2A000J	CHIP R	0.0	J	1/10W	
R543			RK73GB2A471J	CHIP R	470	J	1/10W	
R544			RK73GB2A750J	CHIP R	75	J	1/10W	
R545,546			RK73GB2A220J	CHIP R	22	J	1/10W	
R547			RK73GB2A100J	CHIP R	10	J	1/10W	
R548,549			RK73GB2A220J	CHIP R	22	J	1/10W	
R550			RK73GB2A000J	CHIP R	0.0	J	1/10W	
R559,560			RK73GB2A223J	CHIP R	22K	J	1/10W	
R561,562			RK73GB2A471J	CHIP R	470	J	1/10W	
R567			RK73GB2A750J	CHIP R	75	J	1/10W	
R568			RK73GB2A103J	CHIP R	10K	J	1/10W	
R569			RK73GB2A620J	CHIP R	62	J	1/10W	
R570			RK73GB2A103J	CHIP R	10K	J	1/10W	
R571,572			RK73GB2A220J	CHIP R	22	J	1/10W	
R573			RK73GB2A680J	CHIP R	68	J	1/10W	
R574			RK73GB2A470J	CHIP R	47	J	1/10W	
R576			RK73GB2A470J	CHIP R	47	J	1/10W	
R577-580			RK73GB2A103J	CHIP R	10K	J	1/10W	
R582			RK73GB2A220J	CHIP R	22	J	1/10W	
R583			RK73GB2A151J	CHIP R	150	J	1/10W	
R584		*	R92-5218-05	CHIP R	0.47	J	1/5W	
R609			RK73GB2A473J	CHIP R	47K	J	1/10W	
R610			RK73GB2A102J	CHIP R	1.0K	J	1/10W	
R613			RK73GH2A203D	CHIP R	20K	D	1/10W	
R616			RK73GB2A102J	CHIP R	1.0K	J	1/10W	
R617			RK73GB2A473J	CHIP R	47K	J	1/10W	
R618			RK73GB2A102J	CHIP R	1.0K	J	1/10W	
R619			RK73GB2A473J	CHIP R	47K	J	1/10W	
R621			RK73GB2A473J	CHIP R	47K	J	1/10W	
R622,623			RK73GB2A472J	CHIP R	4.7K	J	1/10W	
R624			RK73GB2A103J	CHIP R	10K	J	1/10W	
R625			RK73GB2A102J	CHIP R	1.0K	J	1/10W	
R626			RK73GB2A223J	CHIP R	22K	J	1/10W	
R627			RK73GB2A103J	CHIP R	10K	J	1/10W	
R630,631			RK73GB2A221J	CHIP R	220	J	1/10W	
R633,634			RK73GH2A393D	CHIP R	39K	D	1/10W	
R635,636			RK73GB2A473J	CHIP R	47K	J	1/10W	
R637,638			RK73GB2A102J	CHIP R	1.0K	J	1/10W	
R639			RK73GB2A473J	CHIP R	47K	J	1/10W	
R641			RK73GB2A273J	CHIP R	27K	J	1/10W	
R642			RK73GB2A470J	CHIP R	47	J	1/10W	
R644			RK73GB2A102J	CHIP R	1.0K	J	1/10W	
R646			RK73GB2A473J	CHIP R	47K	J	1/10W	M1
R646,647			RK73GB2A473J	CHIP R	47K	J	1/10W	E1E2
R648			RK73GB2A473J	CHIP R	47K	J	1/10W	M1
R649			RK73GB2A102J	CHIP R	1.0K	J	1/10W	
R651			RK73GB2A101J	CHIP R	100	J	1/10W	
R652			RK73GB2A103J	CHIP R	10K	J	1/10W	
R653			RK73GB2A102J	CHIP R	1.0K	J	1/10W	
R654			RK73GB2A473J	CHIP R	47K	J	1/10W	
R655,656			RK73GB2A101J	CHIP R	100	J	1/10W	
R657			RK73GB2A473J	CHIP R	47K	J	1/10W	
R658,659			RK73GB2A102J	CHIP R	1.0K	J	1/10W	
R660			RK73GB2A473J	CHIP R	47K	J	1/10W	
R661,662			RK73GB2A102J	CHIP R	1.0K	J	1/10W	
R663			RK73GH2A512D	CHIP R	5.1K	D	1/10W	
R664			RK73GH2A103D	CHIP R	10K	D	1/10W	
R665			RK73GB2A220J	CHIP R	22	J	1/10W	
R666			RK73GB2A102J	CHIP R	1.0K	J	1/10W	
R667			RK73GB2A473J	CHIP R	47K	J	1/10W	
R668			RK73GB2A101J	CHIP R	100	J	1/10W	
R669			RK73GB2A103J	CHIP R	10K	J	1/10W	
R670,671			RK73GB2A101J	CHIP R	100	J	1/10W	
R672			RK73GB2A103J	CHIP R	10K	J	1/10W	
R673			RK73GB2A473J	CHIP R	47K	J	1/10W	
R674			RK73GB2A470J	CHIP R	47	J	1/10W	
R675-678			RK73GB2A102J	CHIP R	1.0K	J	1/10W	
R679,680			RK73GB2A101J	CHIP R	100	J	1/10W	
R681-683			RK73GB2A220J	CHIP R	22	J	1/10W	
R684-686			RK73GB2A102J	CHIP R	1.0K	J	1/10W	
R687			RK73GB2A473J	CHIP R	47K	J	1/10W	
R688			RK73GB2A000J	CHIP R	0.0	J	1/10W	
R689			RK73GB2A102J	CHIP R	1.0K	J	1/10W	
R690,691			RK73GB2A182J	CHIP R	1.8K	J	1/10W	
R692			RK73GB2A473J	CHIP R	47K	J	1/10W	
R693			RK73GB2A222J	CHIP R	2.2K	J	1/10W	
R694-696			RK73GB2A101J	CHIP R	100	J	1/10W	
R697,698			RK73GB2A102J	CHIP R	1.0K	J	1/10W	
R699			RK73GB2A101J	CHIP R	100	J	1/10W	
R700			RK73GB2A222J	CHIP R	2.2K	J	1/10W	
R701			RK73GB2A220J	CHIP R	22	J	1/10W	
R702			RK73GB2A473J	CHIP R	47K	J	1/10W	
R703			RK73GB2A101J	CHIP R	100	J	1/10W	
R704			RK73GB2A473J	CHIP R	47K	J	1/10W	
R705-707			RK73GB2A101J	CHIP R	100	J	1/10W	
R708,709			RK73GB2A473J	CHIP R	47K	J	1/10W	
R710			RK73GB2A103J	CHIP R	10K	J	1/10W	
R712			RK73GB2A472J	CHIP R	4.7K	J	1/10W	
R714			RK73GB2A101J	CHIP R	100	J	1/10W	
R715			RK73GB2A473J	CHIP R	47K	J	1/10W	
R716			RK73GB2A223J	CHIP R	22K	J	1/10W	
R717			RK73GB2A473J	CHIP R	47K	J	1/10W	
R718,719			RK73EB2E101J	CHIP R	100	J	1/4W	
R720			RK73GB2A620J	CHIP R	62	J	1/10W	
R721,722			RK73GB2A473J	CHIP R	47K	J	1/10W	
R723			RK73GB2A104J	CHIP R	100K	J	1/10W	
R724			RK73GB2A100J	CHIP R	10	J	1/10W	
R725,726			RK73GB2A473J	CHIP R	47K	J	1/10W	

E1 : FZDA07EREF2 **E2** : FZDA07ELEF2 (Europe)
M1 : FZDA07MRHF2 (Other Areas)

⚠Indicates safety critical components.

PARTS LIST

SYNTHESIZER UNIT (X14-987x-xx)

Ref. No.	Add	New	Parts No.	Description	Destination
R729,730			RK73GB2A000J	CHIP R 0.0 J 1/10W	
R736			RK73GB2A273J	CHIP R 27K J 1/10W	
R739-743			RK73GB2A101J	CHIP R 100 J 1/10W	
R744			RK73GB2A103J	CHIP R 10K J 1/10W	
R745			RK73GB2A473J	CHIP R 47K J 1/10W	
R747			RK73GB2A223J	CHIP R 22K J 1/10W	
R748			RK73GB2A102J	CHIP R 1.0K J 1/10W	
R751			RK73GB2A100J	CHIP R 10 J 1/10W	
R752			RK73GB2A000J	CHIP R 0.0 J 1/10W	
R753			RK73GB2A100J	CHIP R 10 J 1/10W	
R754			RK73GB2A000J	CHIP R 0.0 J 1/10W	
R757,758			RK73GB2A470J	CHIP R 47 J 1/10W	
R759,760			RK73GB2A101J	CHIP R 100 J 1/10W	
R761			RK73GB2A473J	CHIP R 47K J 1/10W	
R767			RK73GB2A102J	CHIP R 1.0K J 1/10W	
R900,901			RK73EB2E472J	CHIP R 4.7K J 1/4W	
R905-907			RK73EB2E100J	CHIP R 10 J 1/4W	
R908-911			RK73EB2E102J	CHIP R 1.0K J 1/4W	
R912,913			RK73EB2E100J	CHIP R 10 J 1/4W	
R914			RK73EB2E102J	CHIP R 1.0K J 1/4W	
R915-918			RK73EB2E100J	CHIP R 10 J 1/4W	
R919			RK73EB2E750J	CHIP R 75 J 1/4W	
R920,921			RK73EB2E102J	CHIP R 1.0K J 1/4W	
R922			RK73EB2E332J	CHIP R 3.3K J 1/4W	
R923			RK73EB2E102J	CHIP R 1.0K J 1/4W	
R924,925			RK73GB2A223J	CHIP R 22K J 1/10W	
R926			RK73EB2E750J	CHIP R 75 J 1/4W	
R927			RK73EB2E820J	CHIP R 82 J 1/4W	
R928,929			RK73EB2E100J	CHIP R 10 J 1/4W	
R930			RK73EB2E820J	CHIP R 82 J 1/4W	
R935			RK73GB2A000J	CHIP R 0.0 J 1/10W	
D1			1SR154-400	DIODE	
D2			1SS355	DIODE	
D3			UDZS8.2B	ZENER DIODE	
D4			UDZS5.6B	ZENER DIODE	
D7			1SS355	DIODE	
D8			UDZS16B	ZENER DIODE	
D9			1SS352-F	DIODE	
D10			1SS355	DIODE	
D12			1SS355	DIODE	
D13,14			UDZS10B	ZENER DIODE	
D50			ST70-27F-5072	ZENER DIODE	
D51			UDZS7.5B	ZENER DIODE	
D52			UDZS8.2B	ZENER DIODE	
D53			UDZS7.5B	ZENER DIODE	
D54			DAN202U	DIODE	
D100			IMSA-6802-E	SURGE ABSORBER	E1E2
D100,101			IMSA-6802-E	SURGE ABSORBER	M1
D102			1SV237-F	DIODE	M1
D309			DAN202U	DIODE	
D311			DAN202U	DIODE	
D316,317			DAP202U	DIODE	
D319			DAP202U	DIODE	
D320,321			DAN202U	DIODE	

Ref. No.	Add	New	Parts No.	Description	Destination
D322			DAP202U	DIODE	
D501			RB411D	DIODE	
D503			DAP202U	DIODE	
D600,601			STZ6.8N	ZENER DIODE	
D603		✻	NNCD3.6G-A	ZENER DIODE	
D900,901			FTZ6.8E	ZENER DIODE	
D902,903			STZ6.8N	ZENER DIODE	
D904			FTZ6.8E	ZENER DIODE	
D906		✻	NNCD27G-A	ZENER DIODE	
D907			STZ6.8N	ZENER DIODE	
D908		✻	NNCD27G-A	ZENER DIODE	
D909			STZ6.8N	ZENER DIODE	
D910		✻	NNCD3.6F-A	ZENER DIODE	
IC1		✻	XC6216D332JR	ANALOGUE IC	
IC2			SI-3050KD	ANALOGUE IC	
IC3			XC6219B332PR	ANALOGUE IC	
IC4,5			SI-3010KD	ANALOGUE IC	
IC6			SI-3010KM	ANALOGUE IC	
IC7			XC6219B332PR	ANALOGUE IC	
IC10			E-TDA7478AD	ANALOGUE IC	
IC11			TA2083AFNG	ANALOGUE IC	M1
IC31			NJM2750M-ZB	ANALOGUE IC	
IC32			NJM4565V-ZB	ANALOGUE IC	
IC34			E-TDA7415CB	ANALOGUE IC	
IC35			NJM4565V-ZB	ANALOGUE IC	
IC36			TB2904HQ	ANALOGUE IC	
IC37-40			NJM4565V-ZB	ANALOGUE IC	
IC52			DSPA56371AF180	MOS-IC	
IC55		✻	WM8581GEFTRV	MOS-IC	
IC62		✻	70F3334GC5Y1	MICROCONTROLLER IC	
IC63		✻	BU4829FVE	MOS-IC	
IC64			HA12240FPER-E	ANALOGUE IC	
IC65			TC74LVX08FT	MOS-IC	
IC66			TC74VHCT08AFT	MOS-IC	
IC67			TC7SH32FU-F	MOS-IC	
Q1			DTA114EUA	DIGITAL TRANSISTOR	
Q2			CPH3105-E	TRANSISTOR	
Q3			2SC4081	TRANSISTOR	
Q4			DTC143EUA	DIGITAL TRANSISTOR	
Q5			2SB1202-E	TRANSISTOR	
Q6			2SC4081	TRANSISTOR	
Q7			2SB1202-E	TRANSISTOR	
Q8			2SC4081	TRANSISTOR	
Q9			DTA124EUA	DIGITAL TRANSISTOR	
Q10		✻	DTC124XUA	DIGITAL TRANSISTOR	
Q11			DTC114EUA	DIGITAL TRANSISTOR	
Q12		✻	TPC8111-Q	FET	
Q13,14			2SB1202-E	TRANSISTOR	
Q16,17			2SC4081	TRANSISTOR	
Q50			DTA124EUA	DIGITAL TRANSISTOR	
Q51			DTA114EUA	DIGITAL TRANSISTOR	
Q52			DTC124EUA	DIGITAL TRANSISTOR	
Q53			DTA114EUA	DIGITAL TRANSISTOR	
Q54			2SA1576A	TRANSISTOR	
Q55,56		✻	DTC124XUA	DIGITAL TRANSISTOR	

E1 : FZDA07EREF2 **E2** : FZDA07ELEF2 (Europe)
M1 : FZDA07MRHF2 (Other Areas)

⚠Indicates safety critical components.

PARTS LIST

SYNTHESIZER UNIT (X14-987x-xx)

Ref. No.	Add	New	Parts No.	Description	Destination
Q57			2SC4081	TRANSISTOR	
Q58			DTC144EUA	DIGITAL TRANSISTOR	
Q59			2SC4081	TRANSISTOR	
Q60			DTC124EUA	DIGITAL TRANSISTOR	
Q100			2SK3018	FET	M1
Q101			2SA1576A	TRANSISTOR	
Q102			DTA144EUA	DIGITAL TRANSISTOR	
Q104			DTA124EUA	DIGITAL TRANSISTOR	M1
Q106			2SC4081	TRANSISTOR	
Q108			DTA143EUA	DIGITAL TRANSISTOR	M1
Q109		✻	DTC124XUA	DIGITAL TRANSISTOR	M1
Q301,302			2SA1576A	TRANSISTOR	
Q303			2SC4081	TRANSISTOR	
Q304			DTA124EUA	DIGITAL TRANSISTOR	
Q305			DTC143TUA	DIGITAL TRANSISTOR	
Q306		✻	DTC124XUA	DIGITAL TRANSISTOR	
Q307,308			DTC143TUA	DIGITAL TRANSISTOR	
Q309			DTA124EUA	DIGITAL TRANSISTOR	
Q310,311			DTC643TU	DIGITAL TRANSISTOR	
Q312			DTA124EUA	DIGITAL TRANSISTOR	
Q313		✻	DTC124XUA	DIGITAL TRANSISTOR	
Q314			DTC124EUA	DIGITAL TRANSISTOR	
Q315,316			2SC4081	TRANSISTOR	
Q317,318			DTA124EUA	DIGITAL TRANSISTOR	
Q319		✻	DTC124XUA	DIGITAL TRANSISTOR	
Q320			DTA124EUA	DIGITAL TRANSISTOR	
Q321		✻	DTC124XUA	DIGITAL TRANSISTOR	
Q500		✻	DTC124XUA	DIGITAL TRANSISTOR	
Q501,502			DTC643TU	DIGITAL TRANSISTOR	
Q503			DTA124EUA	DIGITAL TRANSISTOR	
Q601			2SC4081	TRANSISTOR	
Q602,603			DTA124EUA	DIGITAL TRANSISTOR	
Q604,605			DTC124EUA	DIGITAL TRANSISTOR	
Q606			DTA144EUA	DIGITAL TRANSISTOR	
Q607			DTA114EUA	DIGITAL TRANSISTOR	
Q901		✻	DTC124XUA	DIGITAL TRANSISTOR	
Q902			2SA1576A	TRANSISTOR	
A100		✻	X86-4100-13	FRONT-END UNIT	M1
A100		✻	X86-4102-71	FRONT-END UNIT	E1E2

SWITCH UNIT (X34-405x-xx)

Ref. No.	Add	New	Parts No.	Description	Destination
D4			B30-1759-05	LED (1608 AMBER)	M1E1
D5			B30-1759-05	LED (1608 AMBER)	E2
D6			B30-1759-05	LED (1608 AMBER)	M1E1
D7			B30-1759-05	LED (1608 AMBER)	E2
D8			B30-1760-05	LED (1608 RED)	M1E1
D9-11			B30-1760-05	LED (1608 RED)	E2
D10-12			B30-1760-05	LED (1608 RED)	M1E1
D13			B30-1760-05	LED (1608 RED)	E2
D16			B30-1760-05	LED (1608 RED)	M1E1
D17			B30-1760-05	LED (1608 RED)	E2
D18			B30-1760-05	LED (1608 RED)	E1
D19			B30-1760-05	LED (1608 RED)	E2
D20-22			B30-1760-05	LED (1608 RED)	M1E1
D23			B30-1760-05	LED (1608 RED)	E2

Ref. No.	Add	New	Parts No.	Description	Destination
D24			B30-1760-05	LED (1608 RED)	M1E1
D25			B30-1760-05	LED (1608 RED)	E2
D27			B30-1760-05	LED (1608 RED)	E1
D28			B30-1760-05	LED (1608 RED)	E2
D29			B30-1760-05	LED (1608 RED)	M1
D30,31			B30-1760-05	LED (1608 RED)	E2
C1			CK73GB1H104K	CHIP C 0.10UF K	
C3			CC73GCH1H471J	CHIP C 470PF J	
C4			CK73GB1H104K	CHIP C 0.10UF K	
C6			CK73GB1H104K	CHIP C 0.10UF K	
C8,9			CC73GCH1H270J	CHIP C 27PF J	
C11,12			CK73GB1H104K	CHIP C 0.10UF K	
C13			CK73GB1H103K	CHIP C 0.010UF K	
C15,16			CK73GB1H104K	CHIP C 0.10UF K	
295			E29-2074-04	CONDUCTIVE RUBBER (S7,13,16,23)	
296			E29-2075-04	CONDUCTIVE RUBBER (S7,13)	M1
CN2			E41-2631-05	SOCKET FOR PIN ASSY	
CN4			E41-2163-05	FLAT CABLE CONNECTOR	
X1			L77-2925-05	CRYSTAL RESONATOR (12.288MHZ)	
CP1-3			RK74GB1J102J	CHIP-COM 1.0K J 1/16W	
CP4			RK74GA1J102J	CHIP-COM 1.0K J 1/16W	
R1,2			RK73EB2E221J	CHIP R 220 J 1/4W	
R3			RK73GB2A103J	CHIP R 10K J 1/10W	
R4			RK73GB2A471J	CHIP R 470 J 1/10W	
R5,6			RK73GB2A472J	CHIP R 4.7K J 1/10W	
R7			RK73GB2A361J	CHIP R 360 J 1/10W	
R8			RK73GB2A821J	CHIP R 820 J 1/10W	
R9			RK73GB2A151J	CHIP R 150 J 1/10W	
R10			RK73GB2A562J	CHIP R 5.6K J 1/10W	
R11			RK73GB2A103J	CHIP R 10K J 1/10W	
R12			RK73GB2A102J	CHIP R 1.0K J 1/10W	
R13			RK73GB2A473J	CHIP R 47K J 1/10W	
R14			RK73GB2A102J	CHIP R 1.0K J 1/10W	
R15			RK73GB2A101J	CHIP R 100 J 1/10W	
R16			RK73GB2A102J	CHIP R 1.0K J 1/10W	
R17			RK73GB2A101J	CHIP R 100 J 1/10W	
R18			RK73GB2A103J	CHIP R 10K J 1/10W	M1E1
R19			RK73GB2A153J	CHIP R 15K J 1/10W	
R20,21			RK73GB2A103J	CHIP R 10K J 1/10W	E2
R21			RK73GB2A103J	CHIP R 10K J 1/10W	E1
R22			RK73GB2A512J	CHIP R 5.1K J 1/10W	
R23			RK73GB2A103J	CHIP R 10K J 1/10W	M1
R24			RK73GB2A102J	CHIP R 1.0K J 1/10W	
R25			RK73GB2A472J	CHIP R 4.7K J 1/10W	
R27			RK73GB2A103J	CHIP R 10K J 1/10W	M1E1
R29			RK73GB2A103J	CHIP R 10K J 1/10W	E2
R37			RK73GB2A472J	CHIP R 4.7K J 1/10W	
R44			RK73GB2A562J	CHIP R 5.6K J 1/10W	
R49			RK73GB2A473J	CHIP R 47K J 1/10W	
R50,51			RK73GB2A223J	CHIP R 22K J 1/10W	
R54			RK73GB2A102J	CHIP R 1.0K J 1/10W	
R59,60			RK73GB2A102J	CHIP R 1.0K J 1/10W	
R62			RK73GB2A472J	CHIP R 4.7K J 1/10W	

E1 : FZDA07EREF2 **E2** : FZDA07ELEF2 (Europe)
M1 : FZDA07MRHF2 (Other Areas)

⚠Indicates safety critical components.

PARTS LIST

SWITCH UNIT (X34-405x-xx)

Ref. No.	Add	New	Parts No.	Description				Destination
R64,65			RK73GB2A000J	CHIP R	0.0	J	1/10W	
R68-70			RK73GB2A222J	CHIP R	2.2K	J	1/10W	
R71			RK73GB2A472J	CHIP R	4.7K	J	1/10W	
R72			RK73GB2A473J	CHIP R	47K	J	1/10W	
R76			RK73GB2A472J	CHIP R	4.7K	J	1/10W	
R78			RK73GB2A472J	CHIP R	4.7K	J	1/10W	
R79			RK73FB2B221J	CHIP R	220	J	1/8W	M1E1
R82			RK73FB2B221J	CHIP R	220	J	1/8W	E2
R84			RK73FB2B221J	CHIP R	220	J	1/8W	M1E1
R86			RK73FB2B221J	CHIP R	220	J	1/8W	E2
R87,88			RK73GB2A472J	CHIP R	4.7K	J	1/10W	
R89			RK73FB2B621J	CHIP R	620	J	1/8W	M1
R89,90			RK73FB2B621J	CHIP R	620	J	1/8W	E1E2
R90			RK73FB2B821J	CHIP R	820	J	1/8W	M1
R91			RK73FB2B201J	CHIP R	200	J	1/8W	M1E1
R92			RK73FB2B201J	CHIP R	200	J	1/8W	E2
R93			RK73GB2A472J	CHIP R	4.7K	J	1/10W	
R96,97			RK73GB2A472J	CHIP R	4.7K	J	1/10W	
R98			RK73FB2B331J	CHIP R	330	J	1/8W	M1E1
R99			RK73GB2A104J	CHIP R	100K	J	1/10W	
R100			RK73GB2A472J	CHIP R	4.7K	J	1/10W	
R101			RK73GB2A331J	CHIP R	330	J	1/10W	
R102			RK73FB2B331J	CHIP R	330	J	1/8W	E2
R103			RK73GB2A473J	CHIP R	47K	J	1/10W	
R104,105			RK73GB2A472J	CHIP R	4.7K	J	1/10W	
R106,107			RK73GB2A222J	CHIP R	2.2K	J	1/10W	
R108			RK73GB2A473J	CHIP R	47K	J	1/10W	
R109,110			RK73GB2A201J	CHIP R	200	J	1/10W	
R111,112			RK73GB2A102J	CHIP R	1.0K	J	1/10W	
R113			RK73GB2A2R2J	CHIP R	2.2	J	1/10W	
R114,115			RK73FB2B821J	CHIP R	820	J	1/8W	
S17			T99-0469-05	ROTARY ENCODER				
S24			T99-0469-05	ROTARY ENCODER				
ED1			3-MT-126GINK	FLUORESCENT INDICATOR TUBE				M1
ED1			6-MT-385GINK	FLUORESCENT INDICATOR TUBE				E1
ED1			6-MT-386GINK	FLUORESCENT INDICATOR TUBE				E2
IC1		✻	MB89F538-1Y8	MICROCONTROLLER IC				
IC2			S-80842CNNB-G	MOS-IC				
IC3			BR24L01AF-W	ROM IC				
Q1			2SC4081	TRANSISTOR				
Q2,3			2SA1576A	TRANSISTOR				
Q4			DTC114EUA	DIGITAL TRANSISTOR				
Q5			2SA1576A	TRANSISTOR				
Q7			2SC4081	TRANSISTOR				
Q11,12			DTC143EUA	DIGITAL TRANSISTOR				
Q13			2SC4081	TRANSISTOR				

ELECTRIC UNIT (X34-485x-xx)

Ref. No.	Add	New	Parts No.	Description				Destination
C1			CK73GB1H103K	CHIP C	0.010UF	K		
C4			CK73GB1A334K	CHIP C	0.33UF	K		
C201		✻	CE32CL1HR33M	CHIP EL	0.33UF	50WV		
C202		✻	CE32BF1C470M	CHIP EL	47UF	16WV		
C261		✻	CE32BE1C470M	CHIP EL	47UF	16WV		
C262			CE32BF1C101M	CHIP EL	100UF	16WV		
C281		✻	CE32BE1C470M	CHIP EL	47UF	16WV		
C282			CE32BF1C101M	CHIP EL	100UF	16WV		
C300			CK73GB1H223K	CHIP C	0.022UF	K		
C301			CK73GB1H104K	CHIP C	0.10UF	K		
C302			CK73HB1H471K	CHIP C	470PF	K		
C303			CK73HB1H102K	CHIP C	1000PF	K		
C304			CK73GB1H562K	CHIP C	5600PF	K		
C305,306			CK73HB1H471K	CHIP C	470PF	K		
C307			CK73GB1H104K	CHIP C	0.10UF	K		
C308			CK73FB1C105K	CHIP C	1.0UF	K		
C310,311			CK73GB1H104K	CHIP C	0.10UF	K		
C312,313			CC73HCH1H221J	CHIP C	220PF	J		
C320			CK73GB1H102K	CHIP C	1000PF	K		
C321			CK73GB1A105K	CHIP C	1.0UF	K		
C322			CK73GB0J225K	CHIP C	2.2UF	K		
C333,334			CK73GB1A105K	CHIP C	1.0UF	K		
C336			CK73GB1A105K	CHIP C	1.0UF	K		
C338			C92-1927-05	ELECTRO	220UF	6.3WV		
C344,345			CE32BJ1C100M	CHIP EL	10UF	16WV		
C346-349			CC73GCH1H221J	CHIP C	220PF	J		E1E2
C355,356			CC73GCH1H150J	CHIP C	15PF	J		
C362		✻	CE32BF1C470M	CHIP EL	47UF	16WV		
C371			CK73GB1H104K	CHIP C	0.10UF	K		
C372			CK73GB1H103K	CHIP C	0.010UF	K		
C373			CK73GB1A474K	CHIP C	0.47UF	K		
C374			CK73GB1H103K	CHIP C	0.010UF	K		
C375			CK73GB1A474K	CHIP C	0.47UF	K		
C376-380			CK73GB1H104K	CHIP C	0.10UF	K		
C381			CE32BM1C100M	CHIP EL	10UF	16WV		
C382,383			CK73GB1H104K	CHIP C	0.10UF	K		
C384			C92-1927-05	ELECTRO	220UF	6.3WV		
C385,386			CC73GCH1H180J	CHIP C	18PF	J		
C387,388			CK73GB1A105K	CHIP C	1.0UF	K		
C389			CK73EB1A106K	CHIP C	10UF	K		
C390			CK73GB1H104K	CHIP C	0.10UF	K		
C391,392			CK73GB1A105K	CHIP C	1.0UF	K		
C395,396			CC73GCH1H221J	CHIP C	220PF	J		
C397,398			CK73GB1A105K	CHIP C	1.0UF	K		
C451			CK73GB1H103K	CHIP C	0.010UF	K		
C501			CK73GB1H104K	CHIP C	0.10UF	K		
C502			CK73HB1H102K	CHIP C	1000PF	K		
C503			CK73GB1H103K	CHIP C	0.010UF	K		
C504			CK73HB1H102K	CHIP C	1000PF	K		
C505			CC73HCH1H102J	CHIP C	1000PF	J		
C506			CK73GB1H104K	CHIP C	0.10UF	K		
C507			C93-1289-05	CERAMIC	10UF	Z		
C508,509			CK73GB1H104K	CHIP C	0.10UF	K		
C510			CK73GB1A105K	CHIP C	1.0UF	K		
C511			C93-1289-05	CERAMIC	10UF	Z		
C512			CK73EB1A475K	CHIP C	4.7UF	K		
C513			CE32AV1A121M	CHIP EL	120UF	10WV		
C514			CE32AV0J221M	CHIP EL	220UF	6.3WV		
C517,518			CC73HCH1H330J	CHIP C	33PF	J		
C519			CC73GCH1H221J	CHIP C	220PF	J		
C520			CC73HCH1H221J	CHIP C	220PF	J		

E1 : FZDA07EREF2 **E2** : FZDA07ELEF2 (Europe)
M1 : FZDA07MRHF2 (Other Areas)

⚠Indicates safety critical components.

PARTS LIST

ELECTRIC UNIT (X34-485x-xx)

Ref. No.	Add	New	Parts No.	Description			Destination
C601			CK73GB1H104K	CHIP C	0.10UF	K	
C602			C93-1289-05	CERAMIC	10UF	Z	
C603			CK73GB1A105K	CHIP C	1.0UF	K	
C604			C93-1289-05	CERAMIC	10UF	Z	
C606			CK73GB1H332K	CHIP C	3300PF	K	
C607			CC73HCH1H470J	CHIP C	47PF	J	
C608			CC73HCH1H331J	CHIP C	330PF	J	
C609			CK73FB1C105K	CHIP C	1.0UF	K	
C610			CK73GB1H103K	CHIP C	0.010UF	K	
C611		✻	CE32AV1C680M	CHIP EL	68UF	16WV	
C612-614			CK73GB1H103K	CHIP C	0.010UF	K	
C616			CK73GB1H103K	CHIP C	0.010UF	K	
C621			CK73GB1H104K	CHIP C	0.10UF	K	M1
C621,622			CK73GB1H104K	CHIP C	0.10UF	K	E1E2
C624			CK73GB1H103K	CHIP C	0.010UF	K	
C627			CK73GB1H104K	CHIP C	0.10UF	K	
C633			CK73GB1H104K	CHIP C	0.10UF	K	
C634			CK73GB1A474K	CHIP C	0.47UF	K	
C635-652			CC73HCH1H101J	CHIP C	100PF	J	
C655-664			CC73HCH1H101J	CHIP C	100PF	J	
C665			CC73GCH1H101J	CHIP C	100PF	J	
C666-674			CC73HCH1H101J	CHIP C	100PF	J	
C678-685			CC73HCH1H101J	CHIP C	100PF	J	
C686			CK73GB1A105K	CHIP C	1.0UF	K	
C687			CK73GB1H104K	CHIP C	0.10UF	K	
C693,694			CC73GCH1H101J	CHIP C	100PF	J	
C695,696			CK73GB1H103K	CHIP C	0.010UF	K	
C698			CK73GB0J225K	CHIP C	2.2UF	K	
C699			CE32CL0J101M	CHIP EL	100UF	6.3WV	
C700			CK73GB1H103K	CHIP C	0.010UF	K	
C701			CK73GB1H104K	CHIP C	0.10UF	K	
C702,703			CC73HCH1H270J	CHIP C	27PF	J	
C705-709			CK73HB1H681K	CHIP C	680PF	K	
C720-722			CK73GB1H104K	CHIP C	0.10UF	K	
C725			CK73GB0J225K	CHIP C	2.2UF	K	
C726,727			CK73GB1A105K	CHIP C	1.0UF	K	
C728			CK73GB1H103K	CHIP C	0.010UF	K	
C733,734			CK73GB1H103K	CHIP C	0.010UF	K	
C735,736			CK73GB1H104K	CHIP C	0.10UF	K	
C737-740			CC73HCH1H101J	CHIP C	100PF	J	
C744-746			CC73HCH1H102J	CHIP C	1000PF	J	
C747,748			CC73HCH1H221J	CHIP C	220PF	J	
C749			CC73GCH1H101J	CHIP C	100PF	J	
C750			CC73HCH1H102J	CHIP C	1000PF	J	
C906			CK73EB1E225K	CHIP C	2.2UF	K	
C907			CK73FB1A225K	CHIP C	2.2UF	K	
C908			CC73GCH1H100D	CHIP C	10PF	D	
C909,910			CK73GB1A105K	CHIP C	1.0UF	K	
C911			CK73EB1E225K	CHIP C	2.2UF	K	
C912			CK73GB1A105K	CHIP C	1.0UF	K	
C915			CK73GB1A105K	CHIP C	1.0UF	K	
C918-922			CK73GB1H102K	CHIP C	1000PF	K	
C928,929			CC73GCH1H101J	CHIP C	100PF	J	
CN3		✻	E41-2598-05	FLAT CABLE CONNECTOR			

Ref. No.	Add	New	Parts No.	Description				Destination
CN4			E41-2772-05	PIN ASSY				
CN6		✻	E41-2718-05	PIN ASSY				
CN7		✻	E41-2598-05	FLAT CABLE CONNECTOR				
CN10		✻	E41-2818-05	PIN ASSY				
CN503		✻	E41-2750-05	SOCKET FOR PIN ASSY				
CN504			E41-2713-05	PIN ASSY				
J1			E58-0954-05	RECTANGULAR RECEPTACLE				
J3			E58-0906-05	RECTANGULAR RECEPTACLE				
J4			E58-1009-05	RECTANGULAR RECEPTACLE				E1E2
J10			E58-1021-05	RECTANGULAR RECEPTACLE				
F1			F53-0296-05	FUSE (UL,CSA) 1A				
L501,502		✻	L33-2354-05	CHOKE COIL				
L601		✻	L33-2374-05	CHOKE COIL				
L602			L41-1005-33	SMALL FIXED INDUCTOR (10U)				
L610			L33-1990-05	SMALL FIXED INDUCTOR				
L611		✻	L33-2427-05	SMALL FIXED INDUCTOR				
L612		✻	L33-2426-05	SMALL FIXED INDUCTOR				
X2			L77-2840-05	CRYSTAL RESONATOR (10.0M)				
X3			L77-2880-05	CRYSTAL RESONATOR				
L	2D		N83-3005-48	PAN HEAD TAPTITE SCREW				
R1		✻	R92-5151-05	CHIP R	0.01			
R2			RK73EB2E8R2J	CHIP R	8.2	J	1/4W	
R3		✻	R92-5151-05	CHIP R	0.01			
R4			RK73GB2A101J	CHIP R	100	J	1/10W	
R5			RK73GB2A153J	CHIP R	15K	J	1/10W	
R6			RK73GH2A363D	CHIP R	36K	D	1/10W	
R7			RK73GB2A752J	CHIP R	7.5K	J	1/10W	
R8			RK73GH2A682D	CHIP R	6.8K	D	1/10W	
R9			RK73GH2A753D	CHIP R	75K	D	1/10W	
R10			RK73GH2A243D	CHIP R	24K	D	1/10W	
R11			RK73GB2A101J	CHIP R	100	J	1/10W	
R12			RK73EB2E8R2J	CHIP R	8.2	J	1/4W	
R13			RK73GB2A104J	CHIP R	100K	J	1/10W	
R14			RK73EB2E562J	CHIP R	5.6K	J	1/4W	
R15			RK73GB2A100J	CHIP R	10	J	1/10W	
R16			RK73GB2A103J	CHIP R	10K	J	1/10W	
R17,18			RK73HB1J102J	CHIP R	1.0K	J	1/16W	
R21-26			RK73GB2A223J	CHIP R	22K	J	1/10W	
R101			RK73GB2A151J	CHIP R	150	J	1/10W	
R300			RK73GB2A473J	CHIP R	47K	J	1/10W	
R301			RK73GB2A333J	CHIP R	33K	J	1/10W	
R302			RK73GB2A182J	CHIP R	1.8K	J	1/10W	
R303			RK73GB2A333J	CHIP R	33K	J	1/10W	
R304			RK73GB2A473J	CHIP R	47K	J	1/10W	
R305			RK73GB2A103J	CHIP R	10K	J	1/10W	
R306			RK73GB2A473J	CHIP R	47K	J	1/10W	
R307,308			RK73GB2A103J	CHIP R	10K	J	1/10W	
R309			RK73GB2A333J	CHIP R	33K	J	1/10W	
R310			RK73GB2A822J	CHIP R	8.2K	J	1/10W	
R311			RK73GB2A333J	CHIP R	33K	J	1/10W	
R312			RK73GB2A102J	CHIP R	1.0K	J	1/10W	
R313,314			RK73GB2A103J	CHIP R	10K	J	1/10W	
R315,316			RK73GB2A471J	CHIP R	470	J	1/10W	

E1 : FZDA07EREF2 **E2** : FZDA07ELEF2 (Europe)
M1 : FZDA07MRHF2 (Other Areas)

⚠Indicates safety critical components.

PARTS LIST

ELECTRIC UNIT (X34-485x-xx)

Ref. No.	Add	New	Parts No.	Description				Destination
R317,318			RK73HB1J102J	CHIP R	1.0K	J	1/16W	
R319,320			RK73EB2E101J	CHIP R	100	J	1/4W	
R321			RK73EB2E680J	CHIP R	68	J	1/4W	
R322,323			RK73GB2A152J	CHIP R	1.5K	J	1/10W	
R324			RK73GB2A103J	CHIP R	10K	J	1/10W	
R326,327			RK73GB2A103J	CHIP R	10K	J	1/10W	
R328			RK73GB2A223J	CHIP R	22K	J	1/10W	
R329			RK73GB2A472J	CHIP R	4.7K	J	1/10W	
R333			RK73GB2A473J	CHIP R	47K	J	1/10W	
R335			RK73GB2A473J	CHIP R	47K	J	1/10W	
R343			RK73GB2A473J	CHIP R	47K	J	1/10W	
R344			RK73GB2A333J	CHIP R	33K	J	1/10W	
R345			RK73GB2A332J	CHIP R	3.3K	J	1/10W	
R346			RK73EB2E332J	CHIP R	3.3K	J	1/4W	
R347			RK73EB2E432J	CHIP R	4.3K	J	1/4W	
R358			RK73GB2A151J	CHIP R	150	J	1/10W	
R360,361			RK73GB2A750J	CHIP R	75	J	1/10W	
R368,369			RK73GB2A103J	CHIP R	10K	J	1/10W	
R371-373			RK73GB2A101J	CHIP R	100	J	1/10W	E1E2
R374-376			RK73GB2A103J	CHIP R	10K	J	1/10W	E1E2
R377-379			RK73GB2A151J	CHIP R	150	J	1/10W	E1E2
R380			RK73GB2A103J	CHIP R	10K	J	1/10W	E1E2
R388			RK73GB2A103J	CHIP R	10K	J	1/10W	
R390			RK73GB2A103J	CHIP R	10K	J	1/10W	
R391			RK73GB2A102J	CHIP R	1.0K	J	1/10W	
R392			RK73HB1J473J	CHIP R	47K	J	1/16W	
R395			RK73HB1J103J	CHIP R	10K	J	1/16W	
R398			RK73HB1J101J	CHIP R	100	J	1/16W	
R399			RK73HB1J103J	CHIP R	10K	J	1/16W	
R400			RK73GB2A101J	CHIP R	100	J	1/10W	
R401-404			RK73HB1J101J	CHIP R	100	J	1/16W	
R405			RK73GB2A473J	CHIP R	47K	J	1/10W	
R406			RK73GB2A103J	CHIP R	10K	J	1/10W	
R407			RK73HB1J102J	CHIP R	1.0K	J	1/16W	
R408			RK73HB1J101J	CHIP R	100	J	1/16W	
R409			RK73HB1J102J	CHIP R	1.0K	J	1/16W	
R410			RK73GB2A102J	CHIP R	1.0K	J	1/10W	
R411			RK73HB1J102J	CHIP R	1.0K	J	1/16W	
R412-414			RK73HB1J101J	CHIP R	100	J	1/16W	
R415,416			RK73HB1J473J	CHIP R	47K	J	1/16W	
R417,418			RK73HB1J301J	CHIP R	300	J	1/16W	
R419-426			RK73HB1J102J	CHIP R	1.0K	J	1/16W	
R427			RK73HB1J473J	CHIP R	47K	J	1/16W	
R428			RK73HB1J103J	CHIP R	10K	J	1/16W	
R429,430			RK73GB2A152J	CHIP R	1.5K	J	1/10W	
R431			RK73HB1J103J	CHIP R	10K	J	1/16W	
R448			RK73HB1J473J	CHIP R	47K	J	1/16W	
R449			RK73GB2A223J	CHIP R	22K	J	1/10W	
R451			RK73GB2A103J	CHIP R	10K	J	1/10W	
R452-456			RK73HB1J101J	CHIP R	100	J	1/16W	
R458,459			RK73GB2A103J	CHIP R	10K	J	1/10W	E1
R459-461			RK73GB2A103J	CHIP R	10K	J	1/10W	E2
R459,460			RK73GB2A103J	CHIP R	10K	J	1/10W	M1
R462			RK73GB2A103J	CHIP R	10K	J	1/10W	M1E1
R468,469			RK73HB1J101J	CHIP R	100	J	1/16W	

Ref. No.	Add	New	Parts No.	Description				Destination
R475,476			RK73EB2E223J	CHIP R	22K	J	1/4W	
R477,478			RK73HB1J102J	CHIP R	1.0K	J	1/16W	
R479			RK73HB1J101J	CHIP R	100	J	1/16W	
R481,482			RK73HB1J102J	CHIP R	1.0K	J	1/16W	
R483			RK73GB2A102J	CHIP R	1.0K	J	1/10W	
R484			RK73HB1J102J	CHIP R	1.0K	J	1/16W	
R485			RK73GB2A102J	CHIP R	1.0K	J	1/10W	
R486,487			RK73HB1J102J	CHIP R	1.0K	J	1/16W	
R488			RK73GB2A472J	CHIP R	4.7K	J	1/10W	
R489			RK73GB2A103J	CHIP R	10K	J	1/10W	
R490,491			RK73HB1J102J	CHIP R	1.0K	J	1/16W	
R492			RK73HB1J101J	CHIP R	100	J	1/16W	
R493			RK73HB1J102J	CHIP R	1.0K	J	1/16W	
R494			RK73HB1J101J	CHIP R	100	J	1/16W	
R495-497			RK73HB1J102J	CHIP R	1.0K	J	1/16W	
R498			RK73GB2A103J	CHIP R	10K	J	1/10W	
R499			RK73GB2A473J	CHIP R	47K	J	1/10W	
R500			RK73HB1J103J	CHIP R	10K	J	1/16W	
R502			RK73HB1J103J	CHIP R	10K	J	1/16W	
R504-508			RK73HB1J102J	CHIP R	1.0K	J	1/16W	
R509			RK73GB2A153J	CHIP R	15K	J	1/10W	
R510			RK73GB2A473J	CHIP R	47K	J	1/10W	
R512			RK73GB2A101J	CHIP R	100	J	1/10W	
R515			RK73HB1J102J	CHIP R	1.0K	J	1/16W	
R516			RK73HB1J101J	CHIP R	100	J	1/16W	
R518			RK73HB1J101J	CHIP R	100	J	1/16W	
R519			RK73HB1J102J	CHIP R	1.0K	J	1/16W	
R520,521			RK73GB2A103J	CHIP R	10K	J	1/10W	E1E2
R522			RK73GH2A103D	CHIP R	10K	D	1/10W	
R523			RK73GB2A471J	CHIP R	470	J	1/10W	
R524			RK73GB2A224J	CHIP R	220K	J	1/10W	
R525			RK73GB2A334J	CHIP R	330K	J	1/10W	
R526			RK73HB1J102J	CHIP R	1.0K	J	1/16W	
R527			RK73HB1J103J	CHIP R	10K	J	1/16W	
R528,529			RK73GB2A102J	CHIP R	1.0K	J	1/10W	
R530			RK73HB1J272J	CHIP R	2.7K	J	1/16W	
R531			RK73HB1J105J	CHIP R	1.0M	J	1/16W	
R533			RK73HB1J473J	CHIP R	47K	J	1/16W	E1E2
R534			RK73GB2A103J	CHIP R	10K	J	1/10W	
R601			RK73GB2A303J	CHIP R	30K	J	1/10W	
R602,603			RK73GB2A203J	CHIP R	20K	J	1/10W	
R604			RK73GH2A123D	CHIP R	12K	D	1/10W	
R605			RK73GH2A681D	CHIP R	680	D	1/10W	
R606			RK73GH2A683D	CHIP R	68K	D	1/10W	
R607			RK73GH2A123D	CHIP R	12K	D	1/10W	
R608			RK73GB2A103J	CHIP R	10K	J	1/10W	
R609			RK73GB2A511J	CHIP R	510	J	1/10W	
R610			RK73GB2A221J	CHIP R	220	J	1/10W	
R613			RK73GB2A223J	CHIP R	22K	J	1/10W	
R615-618			RK73HB1J103J	CHIP R	10K	J	1/16W	
R619			RK73GB2A390J	CHIP R	39	J	1/10W	
R620			RK73GB2A820J	CHIP R	82	J	1/10W	
R627			RK73EH2E223D	CHIP R	22K	D	1/4W	
R628			RK73EB2E472J	CHIP R	4.7K	J	1/4W	
R629			RK73HB1J102J	CHIP R	1.0K	J	1/16W	

E1 : FZDA07EREF2 **E2** : FZDA07ELEF2 (Europe)
M1 : FZDA07MRHF2 (Other Areas)

⚠Indicates safety critical components.

PARTS LIST

ELECTRIC UNIT (X34-485x-xx)

Ref. No.	Add	New	Parts No.	Description				Destination
R631			RK73HB1J101J	CHIP R	100	J	1/16W	
R632			RK73GB2A102J	CHIP R	1.0K	J	1/10W	
R633			RK73HB1J101J	CHIP R	100	J	1/16W	
R634-636			RK73HB1J102J	CHIP R	1.0K	J	1/16W	
R637-639			RK73HB1J101J	CHIP R	100	J	1/16W	
R640-646			RK73EB2E101J	CHIP R	100	J	1/4W	
R647			RK73EB2E8R2J	CHIP R	8.2	J	1/4W	
R648			RK73GB2A473J	CHIP R	47K	J	1/10W	
R654			RK73GB2A105J	CHIP R	1.0M	J	1/10W	
R655			RK73GB2A104J	CHIP R	100K	J	1/10W	
R656			RK73GB2A223J	CHIP R	22K	J	1/10W	
R657			RK73GB2A103J	CHIP R	10K	J	1/10W	
R658			RK73GB2A100J	CHIP R	10	J	1/10W	
R659,660			RK73GB2A470J	CHIP R	47	J	1/10W	
R661-664			RK73GB2A100J	CHIP R	10	J	1/10W	
R665,666			RK73GB2A000J	CHIP R	0.0	J	1/10W	
R667			RK73GB2A100J	CHIP R	10	J	1/10W	
R668			RK73GB2A000J	CHIP R	0.0	J	1/10W	
R672,673			RK73GB2A000J	CHIP R	0.0	J	1/10W	
R678			RK73GB2A000J	CHIP R	0.0	J	1/10W	
R682			RK73GB2A103J	CHIP R	10K	J	1/10W	
R683			RK73GB2A472J	CHIP R	4.7K	J	1/10W	
R692-694			RK73HB1J102J	CHIP R	1.0K	J	1/16W	
R695			RK73GB2A101J	CHIP R	100	J	1/10W	
R696			RK73GB2A000J	CHIP R	0.0	J	1/10W	
R697			RK73HB1J102J	CHIP R	1.0K	J	1/16W	
R698			RK73GB2A000J	CHIP R	0.0	J	1/10W	
R702			RK73GB2A473J	CHIP R	47K	J	1/10W	E1E2
R703			RK73HB1J103J	CHIP R	10K	J	1/16W	
R704-708			RK73EB2E101J	CHIP R	100	J	1/4W	
R709			RK73HB1J102J	CHIP R	1.0K	J	1/16W	
R710			RK73HB1J473J	CHIP R	47K	J	1/16W	
R711			RK73GB2A000J	CHIP R	0.0	J	1/10W	
R713,714			RK73EB2E101J	CHIP R	100	J	1/4W	
R715			RK73GB2A223J	CHIP R	22K	J	1/10W	
R905			RK73GB2A102J	CHIP R	1.0K	J	1/10W	E1E2
R906			RK73GB2A101J	CHIP R	100	J	1/10W	
R908			RK73GB2A202J	CHIP R	2.0K	J	1/10W	
R909			RK73GB2A302J	CHIP R	3.0K	J	1/10W	
R910			RK73GH2A134D	CHIP R	130K	D	1/10W	
R911			RK73GH2A113D	CHIP R	11K	D	1/10W	
R912			RK73HB1J102J	CHIP R	1.0K	J	1/16W	
R913			RK73HB1J103J	CHIP R	10K	J	1/16W	
R914			RK73GB2A332J	CHIP R	3.3K	J	1/10W	
R915			RK73GB2A000J	CHIP R	0.0	J	1/10W	
R916			RK73GB2A223J	CHIP R	22K	J	1/10W	
R917,918			RK73GB2A103J	CHIP R	10K	J	1/10W	
R921			RK73GB2A473J	CHIP R	47K	J	1/10W	
R922			RK73GB2A122J	CHIP R	1.2K	J	1/10W	
R923			RK73GB2A472J	CHIP R	4.7K	J	1/10W	
R924			RK73EB2E000J	CHIP R	0.0	J	1/4W	
R925			RK73GB2A103J	CHIP R	10K	J	1/10W	
R926,927			RK73GB2A473J	CHIP R	47K	J	1/10W	
R928			RK73GB2A511J	CHIP R	510	J	1/10W	
R929			RK73GB2A473J	CHIP R	47K	J	1/10W	

Ref. No.	Add	New	Parts No.	Description				Destination
R934			RK73GB2A750J	CHIP R	75	J	1/10W	
R935			RK73EB2E101J	CHIP R	100	J	1/4W	
R938			RK73HB1J101J	CHIP R	100	J	1/16W	
R939			RK73GH2A273D	CHIP R	27K	D	1/10W	
R940			RK73HB1J102J	CHIP R	1.0K	J	1/16W	
R941-945			RK73GB2A100J	CHIP R	10	J	1/10W	
R949			RK73GB2A000J	CHIP R	0.0	J	1/10W	
R956			RK73GB2A000J	CHIP R	0.0	J	1/10W	
D1			EP05Q04	DIODE				
D201			1SS355	DIODE				
D261			1SS355	DIODE				
D281			1SS355	DIODE				
D300			DA204U	DIODE				
D305,306			UDZS5.6B	ZENER DIODE				
D309			DAN202U	DIODE				
D313			UDZS6.8B	ZENER DIODE				
D316			DAN202U	DIODE				
D319-322			UDZS5.6B	ZENER DIODE				E1E2
D335			UDZS5.6B	ZENER DIODE				
D341			UDZS11B	ZENER DIODE				
D342,343			1SS355	DIODE				
D361			1SS355	DIODE				
D451			UDZS9.1B	ZENER DIODE				
D452			1SS355	DIODE				
D501,502			1SS357-F	DIODE				
D503			DE5LC20U-7061	DIODE				
D504			UDZS5.6B	ZENER DIODE				
D505			UDZS7.5B	ZENER DIODE				
D601			1SS355	DIODE				
D602		✻	FA3J3S	DIODE				
D603			UDZS10B	ZENER DIODE				
D607			UDZS5.6B	ZENER DIODE				
D609,610			DAN202U	DIODE				
D612-623			UDZS5.6B	ZENER DIODE				
D624			DA204U	DIODE				
D625			UDZS5.6B	ZENER DIODE				
D626-628			DA204U	DIODE				
D629		✻	DG1H3-5063	DIODE				
D631			DAN202U	DIODE				
D633			DA204U	DIODE				
IC2			BA7649F	ANALOGUE IC				
IC4			TJA1054-F	MOS-IC				
IC6			HA12240FPER-E	ANALOGUE IC				
IC7		✻	30875FHAGP5Y0	MICROCONTROLLER IC				
IC201		✻	BA08CC0WFP	ANALOGUE IC				
IC261			SI-3050KD	ANALOGUE IC				
IC281			SI-3050KMS	ANALOGUE IC				
IC300			NJM2902V-ZB	ANALOGUE IC				
IC304			NJM2267V-ZB	ANALOGUE IC				
IC305			SN65C1168NS	ANALOGUE IC				E1E2
IC307			NJM2125F-ZB	ANALOGUE IC				
IC310			S-80943CNMC-G	ANALOGUE IC				
IC313			BR24L01AFV-W	ROM IC				
IC314			BA7649F	ANALOGUE IC				

E1 : FZDA07EREF2 **E2** : FZDA07ELEF2 (Europe)
M1 : FZDA07MRHF2 (Other Areas)

⚠Indicates safety critical components.

PARTS LIST

ELECTRIC UNIT (X34-485x-xx)

Ref. No.	Add	New	Parts No.	Description	Destination
IC315			TC74LCX00FT-F	MOS-IC	
IC321			XC6219B332PR	ANALOGUE IC	
IC361		✻	BA06CC0WFP	ANALOGUE IC	
IC501			LTC3728LEGN	ANALOGUE IC	
IC601		✻	BD9300FV	ANALOGUE IC	
IC603			TC74LCX08FT	MOS-IC	
IC605			S-80925CNMC-G	ANALOGUE IC	
IC606			TC7SG04FU-F	MOS-IC	
IC611			LT3467A	ANALOGUE IC	
IC612		✻	XC6206P122MR	ANALOGUE IC	
Q2			DTA143EUA	DIGITAL TRANSISTOR	
Q3			DTC143EUA	DIGITAL TRANSISTOR	
Q6			2SC4081	TRANSISTOR	
Q8			DTC143XUA	DIGITAL TRANSISTOR	
Q9			DTC144EUA	DIGITAL TRANSISTOR	
Q10			DTA144EUA	DIGITAL TRANSISTOR	
Q341			UMD9N	TRANSISTOR	
Q342			2SB1184	TRANSISTOR	
Q343			2SC4081	TRANSISTOR	
Q344			DTC143EUA	DIGITAL TRANSISTOR	
Q451			UMD9N	TRANSISTOR	
Q452,453			2SB1202-E	TRANSISTOR	
Q454			2SC4081	TRANSISTOR	
Q501,502			HAT2218R-E	DUAL FET	
Q504,505			2SC4081	TRANSISTOR	
Q601		✻	DTC124XUA	DIGITAL TRANSISTOR	
Q602			DTA124EUA	DIGITAL TRANSISTOR	
Q603			2SC5824	TRANSISTOR	
Q604		✻	RSS050P03	FET	
Q605			2SC4081	TRANSISTOR	
Q606			DTC143EUA	DIGITAL TRANSISTOR	
Q607			DTC143XUA	DIGITAL TRANSISTOR	
Q608			DTA124EUA	DIGITAL TRANSISTOR	
Q609			DTC143XUA	DIGITAL TRANSISTOR	
Q610			DTC144EUA	DIGITAL TRANSISTOR	
Q611			DTA144EUA	DIGITAL TRANSISTOR	
Q615,616			DTA123YUA	DIGITAL TRANSISTOR	
Q617,618			DTC124EUA	DIGITAL TRANSISTOR	
Q621			2SC4081	TRANSISTOR	
Q622			2SD2114K	TRANSISTOR	
Q624			DTC143XUA	DIGITAL TRANSISTOR	
Q626,627			DTC144EUA	DIGITAL TRANSISTOR	
Q628		✻	DTC124XUA	DIGITAL TRANSISTOR	
Q629			2SC4081	TRANSISTOR	
Q630			2SC4097	TRANSISTOR	
Q634			UMD9N	TRANSISTOR	
Q636		✻	DTC124XUA	DIGITAL TRANSISTOR	
TH1			TH11-3K333FT	THERMISTOR	
A2		✻	W02-5224-05	ELECTRIC CIRCUIT MODULE (GYRO)	

SWITCH UNIT (X34-553x-xx)

Ref. No.	Add	New	Parts No.	Description	Destination
D4,5			B30-1760-05	LED (1608 RED)	
D7-28			B30-1760-05	LED (1608 RED)	
C1			CK73GB1H103K	CHIP C 0.010UF K	

Ref. No.	Add	New	Parts No.	Description	Destination
C4,5			CC73GCH1H070D	CHIP C 7.0PF D	
C6			CK73GB1A105K	CHIP C 1.0UF K	
C7			CK73FB1A225K	CHIP C 2.2UF K	
C8-10			CK73GB1H104K	CHIP C 0.10UF K	
C11			CK73GB1A105K	CHIP C 1.0UF K	
C12			CK73GB1H104K	CHIP C 0.10UF K	
C13			CK73EB0J226K	CHIP C 22UF K	
C14			CK73GB1A105K	CHIP C 1.0UF K	
C16			CK73FB1A225K	CHIP C 2.2UF K	
C20			CK73GB1H104K	CHIP C 0.10UF K	
C21,22			CC73GCH1H270J	CHIP C 27PF J	
C41			CC73GCH1H1R5C	CHIP C 1.5PF C	
C42,43			CC73GCH1H221J	CHIP C 220PF J	
C48-50			CK73GB1H104K	CHIP C 0.10UF K	
C65			CK73GB1A105K	CHIP C 1.0UF K	
CN1		✻	E41-2834-05	PIN ASSY	
CN4			E41-2163-05	FLAT CABLE CONNECTOR	
CN6		✻	E41-2865-05	FLAT CABLE CONNECTOR	
C40		✻	L40-3363-38	SMALL FIXED INDUCTOR (3.3NH)	
X1		✻	L77-2945-05	CRYSTAL RESONATOR (4.000000MHZ)	
CP3			RK74GB1J102J	CHIP-COM 1.0K J 1/16W	
CP4			RK74GB1J222J	CHIP-COM 2.2K J 1/16W	
CP5			RK74GB1J473J	CHIP-COM 47K J 1/16W	
CP6			RK74GB1J104J	CHIP-COM 100K J 1/16W	
CP7			RK74GB1J222J	CHIP-COM 2.2K J 1/16W	
R1-6			RK73EB2E471J	CHIP R 470 J 1/4W	
R7,8			RK73GB2A5R6J	CHIP R 5.6 J 1/10W	
R9-12			RK73GB2A101J	CHIP R 100 J 1/10W	
R13,14			RK73GB2A472J	CHIP R 4.7K J 1/10W	
R15,16			RK73GB2A5R6J	CHIP R 5.6 J 1/10W	
R17			RK73GB2A201J	CHIP R 200 J 1/10W	
R18			RK73GB2A103J	CHIP R 10K J 1/10W	
R19			RK73GB2A432J	CHIP R 4.3K J 1/10W	
R21,22			RK73GB2A103J	CHIP R 10K J 1/10W	
R24			RK73GB2A103J	CHIP R 10K J 1/10W	
R25			RK73GB2A104J	CHIP R 100K J 1/10W	
R26			RK73GB2A103J	CHIP R 10K J 1/10W	
R27			RK73GB2A471J	CHIP R 470 J 1/10W	
R28			RK73GB2A101J	CHIP R 100 J 1/10W	
R29			RK73GB2A104J	CHIP R 100K J 1/10W	
R32			RK73GB2A103J	CHIP R 10K J 1/10W	
R35			RK73GB2A201J	CHIP R 200 J 1/10W	
R36,37			RK73GB2A101J	CHIP R 100 J 1/10W	
R40			RK73GB2A101J	CHIP R 100 J 1/10W	
R41			RK73GB2A473J	CHIP R 47K J 1/10W	
R43			RK73FB2B561J	CHIP R 560 J 1/8W	
R44			RK73FB2B621J	CHIP R 620 J 1/8W	
R45,46			RK73GB2A473J	CHIP R 47K J 1/10W	
R47-49			RK73GB2A101J	CHIP R 100 J 1/10W	
R51			RK73GB2A473J	CHIP R 47K J 1/10W	
R52			RK73GB2A104J	CHIP R 100K J 1/10W	
R53			RK73GB2A222J	CHIP R 2.2K J 1/10W	
R54			RK73GB2A102J	CHIP R 1.0K J 1/10W	
R55,56			RK73GB2A103J	CHIP R 10K J 1/10W	

E1 : FZDA07EREF2 **E2** : FZDA07ELEF2 (Europe)
M1 : FZDA07MRHF2 (Other Areas)

⚠Indicates safety critical components.

PARTS LIST

SWITCH UNIT (X34-553x-xx)

Ref. No.	Add	New	Parts No.	Description				Destination
R57			RK73FB2B621J	CHIP R	620	J	1/8W	
R59			RK73FB2B751J	CHIP R	750	J	1/8W	
R60-62			RK73GB2A101J	CHIP R	100	J	1/10W	
R64			RK73FB2B751J	CHIP R	750	J	1/8W	
R66			RK73GB2A222J	CHIP R	2.2K	J	1/10W	
R68			RK73GB2A222J	CHIP R	2.2K	J	1/10W	
R69			RK73GB2A272J	CHIP R	2.7K	J	1/10W	
R70			RK73GB2A101J	CHIP R	100	J	1/10W	
R71			RK73GB2A272J	CHIP R	2.7K	J	1/10W	
R72			RK73FB2B391J	CHIP R	390	J	1/8W	
R73			RK73GB2A473J	CHIP R	47K	J	1/10W	
R74			RK73GB2A272J	CHIP R	2.7K	J	1/10W	
R75,76			RK73GB2A104J	CHIP R	100K	J	1/10W	
R77			RK73FB2B391J	CHIP R	390	J	1/8W	
R78			RK73FB2B561J	CHIP R	560	J	1/8W	
R86,87			RK73GB2A472J	CHIP R	4.7K	J	1/10W	
R89,90			RK73GB2A473J	CHIP R	47K	J	1/10W	
R92			RK73FB2B561J	CHIP R	560	J	1/8W	
R93,94			RK73FB2B751J	CHIP R	750	J	1/8W	
R97-104			RK73GB2A101J	CHIP R	100	J	1/10W	
R105-108			RK73GB2A000J	CHIP R	0.0	J	1/10W	
R109-112			RK73GB2A102J	CHIP R	1.0K	J	1/10W	
R113,114			RK73EB2E120J	CHIP R	12	J	1/4W	
R115			RK73GB2A000J	CHIP R	0.0	J	1/10W	
R116			RK73GB2A102J	CHIP R	1.0K	J	1/10W	
S5			S70-0884-05	TACT SWITCH				
S47			S79-0829-05	CONNECTOR WITH SWITCH				
L1			T90-0579-05	CHIP ANTENNA				
S16			T99-0470-05	ROTARY ENCODER				E2
S31			T99-0470-05	ROTARY ENCODER				M1E1
D1			1SS355	DIODE				
D33			1SR154-400	DIODE				
ED1		✻	7-BT-313GINK	FLUORESCENT INDICATOR TUBE				
IC1			S24CS02AFJTBG	ROM IC				
IC2			XC6219B332PR	ANALOGUE IC				
IC3		✻	XC6219B222PR	ANALOGUE IC				
IC4		✻	74VHCT04AFT-F	MOS-IC				
IC5		✻	MB95F118AS105	MICROCONTROLLER IC				
Q1			2SA1577	TRANSISTOR				
Q2			DTC123JUA	DIGITAL TRANSISTOR				
Q3			2SA1577	TRANSISTOR				
Q4			DTC123JUA	DIGITAL TRANSISTOR				
Q5			UM6K1N	DUAL FET				
Q8			DTC124EUA	DIGITAL TRANSISTOR				
Q10			DTC124EUA	DIGITAL TRANSISTOR				
A1		✻	W02-5100-05	ELECTRIC CIRCUIT MOD (BLUETOOTH				

DVD UNIT (X37-1100-00)

Ref. No.	Add	New	Parts No.	Description				Destination
C3			CK73HB1A104K	CHIP C	0.10UF	K		
C4			CC73HCH1H471J	CHIP C	470PF	J		
C5-7			CK73HB1E103K	CHIP C	0.010UF	K		
C8			CC73HCH1H471J	CHIP C	470PF	J		
C9			CK73HB0J105K	CHIP C	1.0UF	K		
C10			CK73GB0J106M	CHIP C	10UF	M		
C11,12			CK73HB1E103K	CHIP C	0.010UF	K		
C13			CK73HB1H472K	CHIP C	4700PF	K		
C14			CK73GB0J106M	CHIP C	10UF	M		
C15			CK73HB1A104K	CHIP C	0.10UF	K		
C16			CK73GB0J106M	CHIP C	10UF	M		
C17			CK73GB0J475K	CHIP C	4.7UF	K		
C18			CK73FB0J226M	CHIP C	22UF	M		
C21-23			CK73GB0J106M	CHIP C	10UF	M		
C50			CK73HB1E103K	CHIP C	0.010UF	K		
C51			CK73HB0J105K	CHIP C	1.0UF	K		
C52			CK73HB1E223K	CHIP C	0.022UF	K		
C53			CC73HCH1H470J	CHIP C	47PF	J		
C54			CC73HCH1H102J	CHIP C	1000PF	J		
C55			CC73HCH1H100D	CHIP C	10PF	D		
C56			CC73HCH1H102J	CHIP C	1000PF	J		
C57		✻	CC73HCH1E681J	CHIP C	680PF	J		
C58			CK73HB1H682K	CHIP C	6800PF	K		
C60,61			CK73HB0J105K	CHIP C	1.0UF	K		
C62			CC73HCH1H102J	CHIP C	1000PF	J		
C63			CC73HCH1H331J	CHIP C	330PF	J		
C64			CK73HB1H222K	CHIP C	2200PF	K		
C65		✻	CC73HCH1E681J	CHIP C	680PF	J		
C66			CK73HB1H152K	CHIP C	1500PF	K		
C67,68			CC73HCH1H102J	CHIP C	1000PF	J		
C69-72			CC73HCH1H151J	CHIP C	150PF	J		
C73			CK73HB1A104K	CHIP C	0.10UF	K		
C74-79			CK73HB0J105K	CHIP C	1.0UF	K		
C80			CK73HB1A104K	CHIP C	0.10UF	K		
C81,82			CK73HB0J105K	CHIP C	1.0UF	K		
C83			C93-1228-05	CHIP C	1UF	M		
C84,85			CK73HB0J105K	CHIP C	1.0UF	K		
C86			C93-1228-05	CHIP C	1UF	M		
C90			CK73HB1E103K	CHIP C	0.010UF	K		
C92			C93-1228-05	CHIP C	1UF	M		
C93,94			CK73HB0J105K	CHIP C	1.0UF	K		
C95			CK73HB1A104K	CHIP C	0.10UF	K		
C97			CK73HB1A104K	CHIP C	0.10UF	K		
C99			CK73HB1A104K	CHIP C	0.10UF	K		
C100			CK73FB0J226M	CHIP C	22UF	M		
C101			CK73GB0J475K	CHIP C	4.7UF	K		
C103,104			CK73FB0J226M	CHIP C	22UF	M		
C120,121			CK73HB1E223K	CHIP C	0.022UF	K		
C143,144			CC73HCH1H120J	CHIP C	12PF	J		
C202			CK73FB0J226M	CHIP C	22UF	M		
C207,208			CK73HB1A104K	CHIP C	0.10UF	K		
C210			CK73HB1A104K	CHIP C	0.10UF	K		
C212			CK73HB1A104K	CHIP C	0.10UF	K		
C213			CK73HB1H332K	CHIP C	3300PF	K		
C214,215			CK73HB1A104K	CHIP C	0.10UF	K		
C216			CC73HCH1H471J	CHIP C	470PF	J		
C217			CK73HB1A104K	CHIP C	0.10UF	K		
C218			CK73HB1C473K	CHIP C	0.047UF	K		
C219,220			CK73HB1A104K	CHIP C	0.10UF	K		
C221-224			CK73HB0J105K	CHIP C	1.0UF	K		
C225			CK73GB0J475K	CHIP C	4.7UF	K		

E1 : FZDA07EREF2 **E2** : FZDA07ELEF2 (Europe)
M1 : FZDA07MRHF2 (Other Areas)

⚠Indicates safety critical components.

PARTS LIST

DVD UNIT (X37-1100-00)

Ref. No.	Add	New	Parts No.	Description				Destination
C227			CK73FB0J226M	CHIP C	22UF	M		
C434			CK73GB0J106M	CHIP C	10UF	M		
C435			CK73HB1E103K	CHIP C	0.010UF	K		
C436,437			CK73HB1A104K	CHIP C	0.10UF	K		
C438-443			CK73FB0J226M	CHIP C	22UF	M		
C444			CC73HCH1H102J	CHIP C	1000PF	J		
C445			CK73HB1E103K	CHIP C	0.010UF	K		
C446			CC73HCH1H101J	CHIP C	100PF	J		
C447,448			CC73HCH1H102J	CHIP C	1000PF	J		
C449,450			CK73HB1H472K	CHIP C	4700PF	K		
C451,452			CC73HCH1H102J	CHIP C	1000PF	J		
CN1			E41-2594-05	FLAT CABLE CONNECTOR				
CN2		✻	E41-2598-05	FLAT CABLE CONNECTOR				
CN3			E41-2596-05	FLAT CABLE CONNECTOR				
L1-5			L92-0365-05	CHIP FERRITE				
L6			L92-0617-05	CHIP FERRITE				
X1			L77-2870-05	CRYSTAL RESONATOR (16.897849M)				
CP2-4		✻	RK74HB1J103JK	CHIP-COM	10K	J	1/16W	
CP5-9		✻	RK74HB1J330JK	CHIP-COM	33	J	1/16W	
CP10		✻	RK74HB1J820JK	CHIP-COM	82	J	1/16W	
CP11		✻	RK74HB1J103JK	CHIP-COM	10K	J	1/16W	
R1		✻	RK73HB1J103JK	CHIP R	10K	J	1/16W	
R3,4		✻	RK73HB1J103JK	CHIP R	10K	J	1/16W	
R5,6		✻	RK73HH1J123DK	CHIP R	12K	D	1/16W	
R7		✻	RK73HH1J333DK	CHIP R	33K	D	1/16W	
R8,9		✻	RK73HB1J103JK	CHIP R	10K	J	1/16W	
R10		✻	RK73HB1J163JK	CHIP R	16K	J	1/16W	
R11		✻	RK73HB1J102JK	CHIP R	1.0K	J	1/16W	
R13		✻	RK73HB1J103JK	CHIP R	10K	J	1/16W	
R16		✻	RK73HB1J103JK	CHIP R	10K	J	1/16W	
R17		✻	RK73HB1J271JK	CHIP R	270	J	1/16W	
R18		✻	RK73HH1J270DK	CHIP R	27	D	1/16W	
R19		✻	RK73HB1J301JK	CHIP R	300	J	1/16W	
R21,22		✻	RK73HH1J103DK	CHIP R	10K	D	1/16W	
R26,27			R92-5146-05	CHIP R	1.0	D	1/4W	
R28,29			R92-5147-05	CHIP R	1.2	D	1/4W	
R31		✻	RK73HB1J102JK	CHIP R	1.0K	J	1/16W	
R50,51		✻	RK73HB1J510JK	CHIP R	51	J	1/16W	
R52		✻	RK73HH1J153DK	CHIP R	15K	D	1/16W	
R53		✻	RK73HB1J105JK	CHIP R	1.0M	J	1/16W	
R54		✻	RK73HB1J472JK	CHIP R	4.7K	J	1/16W	
R55		✻	RK73HB1J103JK	CHIP R	10K	J	1/16W	
R56		✻	RK73HH1J472DK	CHIP R	4.7K	D	1/16W	
R57,58		✻	RK73HB1J202JK	CHIP R	2.0K	J	1/16W	
R59,60		✻	RK73HB1J103JK	CHIP R	10K	J	1/16W	
R63		✻	RK73HB1J103JK	CHIP R	10K	J	1/16W	
R64,65		✻	RK73HB1J472JK	CHIP R	4.7K	J	1/16W	
R81		✻	RK73HB1J103JK	CHIP R	10K	J	1/16W	
R83,84		✻	RK73HB1J473JK	CHIP R	47K	J	1/16W	
R85		✻	RK73HB1J223JK	CHIP R	22K	J	1/16W	
R86		✻	RK73HB1J103JK	CHIP R	10K	J	1/16W	
R87		✻	RK73HB1J105JK	CHIP R	1.0M	J	1/16W	
R88		✻	RK73HB1J152JK	CHIP R	1.5K	J	1/16W	

Ref. No.	Add	New	Parts No.	Description				Destination
R89,90		✻	RK73HB1J123JK	CHIP R	12K	J	1/16W	
R91		✻	RK73HB1J472JK	CHIP R	4.7K	J	1/16W	
R92		✻	RK73HB1J273JK	CHIP R	27K	J	1/16W	
R96		✻	RK73HB1J103JK	CHIP R	10K	J	1/16W	
R98		✻	RK73HB1J202JK	CHIP R	2.0K	J	1/16W	
R101		✻	RK73HH1J273DK	CHIP R	27K	D	1/16W	
R102		✻	RK73GB2A470JK	CHIP R	47	J	1/10W	
R105		✻	RK73HB1J103JK	CHIP R	10K	J	1/16W	
R113		✻	RK73HB1J153JK	CHIP R	15K	J	1/16W	
R120		✻	RK73HB1J103JK	CHIP R	10K	J	1/16W	
R121		✻	RK73HB1J820JK	CHIP R	82	J	1/16W	
R122		✻	RK73HB1J103JK	CHIP R	10K	J	1/16W	
R123		✻	RK73HB1J330JK	CHIP R	33	J	1/16W	
R124-126		✻	RK73HB1J820JK	CHIP R	82	J	1/16W	
R150,151		✻	RK73HB1J102JK	CHIP R	1.0K	J	1/16W	
R152,153		✻	RK73HB1J104JK	CHIP R	100K	J	1/16W	
R154,155		✻	RK73HB1J103JK	CHIP R	10K	J	1/16W	
R158,159		✻	RK73HB1J1R0JK	CHIP R	1.0	J	1/16W	
R160			R92-3350-05	CHIP R	2.2	F	1/10W	
R162,163		✻	RK73HB1J104JK	CHIP R	100K	J	1/16W	
R164,165		✻	RK73HH1J101DK	CHIP R	100	D	1/16W	
R166		✻	RK73HB1J225JK	CHIP R	2.2M	J	1/16W	
R167		✻	RK73HH1J113DK	CHIP R	11K	D	1/16W	
R168		✻	RK73HH1J273DK	CHIP R	27K	D	1/16W	
R169		✻	RK73HB1J125JK	CHIP R	1.2M	J	1/16W	
R255			R92-5112-05	CHIP R	4.7	F	1/10W	
R256		✻	RK73HH1J111DK	CHIP R	110	D	1/16W	
R257		✻	RK73HH1J202DK	CHIP R	2.0K	D	1/16W	
R258		✻	RK73HB1J103JK	CHIP R	10K	J	1/16W	
R260		✻	RK73HH1J132DK	CHIP R	1.3K	D	1/16W	
R261		✻	RK73HH1J203DK	CHIP R	20K	D	1/16W	
R262		✻	RK73HB1J821JK	CHIP R	820	J	1/16W	
R263		✻	RK73HB1J242JK	CHIP R	2.4K	J	1/16W	
R265-268			RK73HB1J000JK	CHIP R	0.0	J	1/16W	
R270			RK73HB1J000JK	CHIP R	0.0	J	1/16W	
R271		✻	RK73HB1J471JK	CHIP R	470	J	1/16W	
R272		✻	RK73HH1J682DK	CHIP R	6.8K	D	1/16W	
R273		✻	RK73HH1J122DK	CHIP R	1.2K	D	1/16W	
R274		✻	RK73HH1J682DK	CHIP R	6.8K	D	1/16W	
R275		✻	RK73HH1J122DK	CHIP R	1.2K	D	1/16W	
R278			R92-5112-05	CHIP R	4.7	F	1/10W	
R279		✻	RK73HH1J102DK	CHIP R	1.0K	D	1/16W	
R280		✻	RK73HB1J4R7JK	CHIP R	4.7	J	1/16W	
R281		✻	RK73HB1J103JK	CHIP R	10K	J	1/16W	
R282		✻	RK73HB1J1R0JK	CHIP R	1.0	J	1/16W	
R284			RK73HB1J000JK	CHIP R	0.0	J	1/16W	
S1			S68-0911-15	PUSH SWITCH				
S2		✻	S68-0914-05	PUSH SWITCH				
D1			1SS402-F	DIODE				
D5,6			015AZ5.1-F (Y)	ZENER DIODE				
D8		✻	1SS387-F	DIODE				
IC1			AN22022ABV	ANALOGUE IC				
IC3		✻	-	ROM IC				

E1 : FZDA07EREF2 **E2** : FZDA07ELEF2 (Europe)
M1 : FZDA07MRHF2 (Other Areas)

⚠Indicates safety critical components.

PARTS LIST

DVD UNIT (X37-1100-00)

Ref. No.	Add	New	Parts No.	Description			Destination
IC4			MN103S71F	MOS-IC			
IC5		✻	S1000N28I4T1G	ANALOGUE IC			
IC7		✻	TA48S033AF-Q	ANALOGUE IC			
IC8		✻	S-80812CNPF-G	ANALOGUE IC			
IC9		✻	TA48S015AF-Q	ANALOGUE IC			
IC10			AN41250A-VB	ANALOGUE IC			
IC11			-	ROM IC			
IC12			NJU7042	ANALOGUE IC			
Q1-4			DTA143XE	DIGITAL TRANSISTOR			
Q5,6			2SK3019	FET			
Q12,13			2SB1709	TRANSISTOR			
Q14			SSM3J15FU-F	FET			
Q15			DTA143ZE	DIGITAL TRANSISTOR			
Q16,17			2SA1774	TRANSISTOR			
Q18			DTA143ZE	DIGITAL TRANSISTOR			
Q19			DTC114EE	DIGITAL TRANSISTOR			
DVD UNIT (X37-1120-02)							
C3			CK73HB1A104K	CHIP C	0.10UF	K	
C4			CC73HCH1H471J	CHIP C	470PF	J	
C5-7			CK73HB1E103K	CHIP C	0.010UF	K	
C8			CC73HCH1H471J	CHIP C	470PF	J	
C11			CK73HB1E103K	CHIP C	0.010UF	K	
C14			CK73GB0J106M	CHIP C	10UF	M	
C15			CK73HB1A104K	CHIP C	0.10UF	K	
C16			CK73GB0J106M	CHIP C	10UF	M	
C17			CK73GB0J475K	CHIP C	4.7UF	K	
C18			CK73FB0J226M	CHIP C	22UF	M	
C50,51			C93-1228-05	CHIP C	1UF	M	
C54			C93-1228-05	CHIP C	1UF	M	
C59,60			C93-1228-05	CHIP C	1UF	M	
C62			C93-1228-05	CHIP C	1UF	M	
C63			CK73FB0J226M	CHIP C	22UF	M	
C72			CK73HB1A104K	CHIP C	0.10UF	K	
C73			CK73GB0J106M	CHIP C	10UF	M	
C100-102			CK73HB1A104K	CHIP C	0.10UF	K	
C103			C93-1228-05	CHIP C	1UF	M	
C104			CK73HB1A104K	CHIP C	0.10UF	K	
C105			C93-1228-05	CHIP C	1UF	M	
C106,107			CK73HB1A104K	CHIP C	0.10UF	K	
C108			C93-1228-05	CHIP C	1UF	M	
C109			CK73HB1A104K	CHIP C	0.10UF	K	
C110			C93-1228-05	CHIP C	1UF	M	
C111			CK73HB1C333K	CHIP C	0.033UF	K	
C112,113			CK73HB1A104K	CHIP C	0.10UF	K	
C114			CK73GB1H562K	CHIP C	5600PF	K	
C115			CK73HB1C183K	CHIP C	0.018UF	K	
C117			CK73HB1A104K	CHIP C	0.10UF	K	
C118			CK73HB0J105K	CHIP C	1.0UF	K	
C119			C93-1228-05	CHIP C	1UF	M	
C120,121			CK73HB1A104K	CHIP C	0.10UF	K	
C122,123			CK73GB0J106M	CHIP C	10UF	M	
C126-129			CK73HB1A104K	CHIP C	0.10UF	K	
C130-133			CC73HCH1H151J	CHIP C	150PF	J	
C134			CC73HCH1H102J	CHIP C	1000PF	J	

Ref. No.	Add	New	Parts No.	Description			Destination
C135,136			C93-1228-05	CHIP C	1UF	M	
C137,138			CK73HB0J105K	CHIP C	1.0UF	K	
C139,140			C93-1228-05	CHIP C	1UF	M	
C142			C93-1228-05	CHIP C	1UF	M	
C143,144			CC73HCH1H100D	CHIP C	10PF	D	
C145-149			CK73HB1A104K	CHIP C	0.10UF	K	
C151,152			C93-1228-05	CHIP C	1UF	M	
C153,154			CK73HB1A104K	CHIP C	0.10UF	K	
C158			CK73HB1A104K	CHIP C	0.10UF	K	
C162			CK73HB1A104K	CHIP C	0.10UF	K	
C164-169			CK73GB0J106M	CHIP C	10UF	M	
C200-203			CK73GB0J106M	CHIP C	10UF	M	
C207,208			CK73HB1A104K	CHIP C	0.10UF	K	
C223			CK73HB0J105K	CHIP C	1.0UF	K	
C224			CK73HB1E103K	CHIP C	0.010UF	K	
C226			CK73FB0J226M	CHIP C	22UF	M	
C300,301			CC73HCH1H102J	CHIP C	1000PF	J	
C302			CK73GB0J106M	CHIP C	10UF	M	
C304-306			CK73GB0J106M	CHIP C	10UF	M	
C350,351			CC73HCH1H102J	CHIP C	1000PF	J	
C434			CK73GB0J106M	CHIP C	10UF	M	
C435			CK73HB1E103K	CHIP C	0.010UF	K	
C441			CK73HB1A104K	CHIP C	0.10UF	K	
C442-445			CK73FB0J226M	CHIP C	22UF	M	
C446			CK73HB1A104K	CHIP C	0.10UF	K	
C448,449			C93-1228-05	CHIP C	1UF	M	
C450			CK73HB1A104K	CHIP C	0.10UF	K	
C452			C93-1228-05	CHIP C	1UF	M	
C454,455			CK73HB1A104K	CHIP C	0.10UF	K	
C456-458			CK73HB1H682K	CHIP C	6800PF	K	
C461			CK73HB1H472K	CHIP C	4700PF	K	
C462			CK73HB1E103K	CHIP C	0.010UF	K	
C466			CK73HB1A104K	CHIP C	0.10UF	K	
C467			CC73HCH1H121J	CHIP C	120PF	J	
C468,469			CK73HB1A104K	CHIP C	0.10UF	K	
C470			CK73HB1E103K	CHIP C	0.010UF	K	
C476			CC73HCH1H101J	CHIP C	100PF	J	
C477-479			CK73FB0J226M	CHIP C	22UF	M	
C480			CK73HB1A104K	CHIP C	0.10UF	K	
C481			CC73HCH1H151J	CHIP C	150PF	J	
C482			CC73HCH1H471J	CHIP C	470PF	J	
C483			CC73HCH1H102J	CHIP C	1000PF	J	
C484			CK73HB1E103K	CHIP C	0.010UF	K	
C485			CC73HCH1H151J	CHIP C	150PF	J	
C486			CC73HCH1H471J	CHIP C	470PF	J	
C487			CC73HCH1H102J	CHIP C	1000PF	J	
C488			CK73HB1E103K	CHIP C	0.010UF	K	
C489			CC73HCH1H151J	CHIP C	150PF	J	
C490			CC73HCH1H471J	CHIP C	470PF	J	
C491			CC73HCH1H102J	CHIP C	1000PF	J	
C492			CK73HB1E103K	CHIP C	0.010UF	K	
C493			CC73HCH1H151J	CHIP C	150PF	J	
C494			CC73HCH1H471J	CHIP C	470PF	J	
C495			CC73HCH1H102J	CHIP C	1000PF	J	
C496			CK73HB1E103K	CHIP C	0.010UF	K	

E1 : FZDA07EREF2 **E2** : FZDA07ELEF2 (Europe)
M1 : FZDA07MRHF2 (Other Areas)

⚠Indicates safety critical components.

PARTS LIST

DVD UNIT (X37-1120-02)

Ref. No.	Add	New	Parts No.	Description				Destination
C497,498			CK73FB0J226M	CHIP C	22UF	M		
C504,505			CK73HB1H472K	CHIP C	4700PF	K		
C506,507			CC73HCH1H102J	CHIP C	1000PF	J		
C510			CC73HCH1H102J	CHIP C	1000PF	J		
C511			CK73GB0J106M	CHIP C	10UF	M		
C513-515			CK73HB1A104K	CHIP C	0.10UF	K		
C516			CK73HB1C333K	CHIP C	0.033UF	K		
C517			CK73HB1E103K	CHIP C	0.010UF	K		
C520			CC73HCH1H102J	CHIP C	1000PF	J		
C521			CK73HB0J105K	CHIP C	1.0UF	K		
CN1			E41-2594-05	FLAT CABLE CONNECTOR				
CN3			E41-2596-05	FLAT CABLE CONNECTOR				
CN6		✻	E41-2598-05	FLAT CABLE CONNECTOR				
CN10		✻	E41-2597-05	FLAT CABLE CONNECTOR				
L1			L92-0365-05	CHIP FERRITE				
L2-4			L92-0612-05	CHIP FERRITE				
L5,6			L92-0611-05	CHIP FERRITE				
L7,8			L92-0612-05	CHIP FERRITE				
L10			L33-2281-05	SMALL FIXED INDUCTOR				
L11			L33-2280-05	SMALL FIXED INDUCTOR				
L12-14			L92-0365-05	CHIP FERRITE				
L15			L92-0612-05	CHIP FERRITE				
L20			L92-0617-05	CHIP FERRITE				
L21			L92-0612-05	CHIP FERRITE				
L22			L92-0838-05	CHIP FERRITE				
X1			L77-2924-05	CRYSTAL RESONATOR (27MHZ,30PPM)				
CP1-9			RK74HB1J470J	CHIP-COM	47	J	1/16W	
CP36,37			RK74HB1J103J	CHIP-COM	10K	J	1/16W	
CP44			RK74HB1J330J	CHIP-COM	33	J	1/16W	
CP54-56			RK74HB1J330J	CHIP-COM	33	J	1/16W	
CP57			RK74HB1J820J	CHIP-COM	82	J	1/16W	
CP58			RK74HB1J330J	CHIP-COM	33	J	1/16W	
CP59-68			RK74HB1J103J	CHIP-COM	10K	J	1/16W	
CP69			RK74HB1J220J	CHIP-COM	22	J	1/16W	
CP70-73			RK74HB1J103J	CHIP-COM	10K	J	1/16W	
R1-4			RK73HB1J103J	CHIP R	10K	J	1/16W	
R5,6			RK73HH1J123D	CHIP R	12K	D	1/16W	
R10			RK73HB1J163J	CHIP R	16K	J	1/16W	
R16			RK73HB1J103J	CHIP R	10K	J	1/16W	
R17			RK73HB1J271J	CHIP R	270	J	1/16W	
R19			RK73HB1J301J	CHIP R	300	J	1/16W	
R21,22			RK73HH1J103D	CHIP R	10K	D	1/16W	
R79			RK73HB1J102J	CHIP R	1.0K	J	1/16W	
R80			RK73HB1J220J	CHIP R	22	J	1/16W	
R81			RK73HB1J470J	CHIP R	47	J	1/16W	
R84,85			RK73HB1J202J	CHIP R	2.0K	J	1/16W	
R86			RK73HB1J105J	CHIP R	1.0M	J	1/16W	
R87			RK73HB1J102J	CHIP R	1.0K	J	1/16W	
R89			RK73HH1J303D	CHIP R	30K	D	1/16W	
R90			RK73HB1J223J	CHIP R	22K	J	1/16W	
R91			RK73HB1J470J	CHIP R	47	J	1/16W	
R92			RK73HH1J123D	CHIP R	12K	D	1/16W	
R94			RK73HH1J512D	CHIP R	5.1K	D	1/16W	
R111			RK73HB1J220J	CHIP R	22	J	1/16W	

Ref. No.	Add	New	Parts No.	Description				Destination
R112,113			RK73HB1J101J	CHIP R	100	J	1/16W	
R119			RK73HB1J103J	CHIP R	10K	J	1/16W	
R121			RK73HB1J182J	CHIP R	1.8K	J	1/16W	
R122			RK73HB1J472J	CHIP R	4.7K	J	1/16W	
R150,151			RK73HB1J100J	CHIP R	10	J	1/16W	
R152,153			RK73HB1J471J	CHIP R	470	J	1/16W	
R154,155			RK73HB1J751J	CHIP R	750	J	1/16W	
R156,157			RK73HB1J560J	CHIP R	56	J	1/16W	
R158,159			RK73HB1J2R2J	CHIP R	2.2	J	1/16W	
R162,163			RK73HB1J104J	CHIP R	100K	J	1/16W	
R164,165			RK73HH1J101D	CHIP R	100	D	1/16W	
R200			RK73HH1J201D	CHIP R	200	D	1/16W	
R204			RK73HH1J151D	CHIP R	150	D	1/16W	
R275,276			RK73HB1J472J	CHIP R	4.7K	J	1/16W	
R300,301			RK73HH1J472D	CHIP R	4.7K	D	1/16W	
R302,303			RK73HH1J183D	CHIP R	18K	D	1/16W	
R304			RK73HH1J202D	CHIP R	2.0K	D	1/16W	
R305			RK73HB1J163J	CHIP R	16K	J	1/16W	
R350,351			RK73HB1J4R7J	CHIP R	4.7	J	1/16W	
R400-402			RK73HB1J470J	CHIP R	47	J	1/16W	
R409			RK73HB1J470J	CHIP R	47	J	1/16W	
R410,411			RK73HB1J102J	CHIP R	1.0K	J	1/16W	
R450			RK73HB1J202J	CHIP R	2.0K	J	1/16W	
R467			RK73HB1J470J	CHIP R	47	J	1/16W	
R468-470			RK73HB1J103J	CHIP R	10K	J	1/16W	
R471			RK73HB1J820J	CHIP R	82	J	1/16W	
R472,473			RK73HB1J330J	CHIP R	33	J	1/16W	
R475			R92-3350-05	CHIP R	2.2	F	1/10W	
R476			R92-5112-05	CHIP R	4.7	F	1/10W	
R477			RK73GH2A111D	CHIP R	110	D	1/10W	
R478			RK73HH1J472D	CHIP R	4.7K	D	1/16W	
R480			RK73HH1J202D	CHIP R	2.0K	D	1/16W	
R481			RK73HH1J203D	CHIP R	20K	D	1/16W	
R482-484			RK73HB1J820J	CHIP R	82	J	1/16W	
R485			RK73HB1J102J	CHIP R	1.0K	J	1/16W	
R486,487			RK73HB1J103J	CHIP R	10K	J	1/16W	
R489			RK73HB1J220J	CHIP R	22	J	1/16W	
R491-493			RK73HB1J751J	CHIP R	750	J	1/16W	
R496,497			RK73HB1J102J	CHIP R	1.0K	J	1/16W	
R498			RK73HB1J101J	CHIP R	100	J	1/16W	
R501			RK73HH1J132D	CHIP R	1.3K	D	1/16W	
R502			RK73HH1J333D	CHIP R	33K	D	1/16W	
R503			RK73HH1J203D	CHIP R	20K	D	1/16W	
R504			RK73HB1J242J	CHIP R	2.4K	J	1/16W	
R505			RK73HB1J821J	CHIP R	820	J	1/16W	
R507			RK73HB1J103J	CHIP R	10K	J	1/16W	
R508			RK73HB1J225J	CHIP R	2.2M	J	1/16W	
R509			RK73HB1J102J	CHIP R	1.0K	J	1/16W	
R510			RK73HB1J103J	CHIP R	10K	J	1/16W	
R511			RK73HB1J473J	CHIP R	47K	J	1/16W	
R512,513			RK73HB1J103J	CHIP R	10K	J	1/16W	
R518-522			RK73HB1J103J	CHIP R	10K	J	1/16W	
R523,524			RK73HB1J4R7J	CHIP R	4.7	J	1/16W	
R525			RK73HB1J000J	CHIP R	0.0	J	1/16W	
R530			RK73HB1J000J	CHIP R	0.0	J	1/16W	

E1 : FZDA07EREF2 **E2** : FZDA07ELEF2 (Europe)
M1 : FZDA07MRHF2 (Other Areas)

⚠Indicates safety critical components.

PARTS LIST

DVD UNIT (X37-1120-02)

Ref. No.	Add	New	Parts No.	Description	Destination
R531			RK73HB1J471J	CHIP R 470 J 1/16W	
R532			RK73HB1J472J	CHIP R 4.7K J 1/16W	
R533			RK73HH1J683D	CHIP R 68K D 1/16W	
R541			RK73HH1J122D	CHIP R 1.2K D 1/16W	
R544-559			RK73HB1J2R2J	CHIP R 2.2 J 1/16W	
R560			RK73HB1J000J	CHIP R 0.0 J 1/16W	
R561,562			RK73HH1J682D	CHIP R 6.8K D 1/16W	
R563			RK73HH1J122D	CHIP R 1.2K D 1/16W	
R564			RK73HB1J4R7J	CHIP R 4.7 J 1/16W	
R574-576			RK73HB1J000J	CHIP R 0.0 J 1/16W	
R588			R92-5112-05	CHIP R 4.7 F 1/10W	
R591			RK73HB1J820J	CHIP R 82 J 1/16W	
R599,600			RK73HB1J103J	CHIP R 10K J 1/16W	
R601-604			RK73HB1J102J	CHIP R 1.0K J 1/16W	
R605,606			RK73HB1J103J	CHIP R 10K J 1/16W	
R614			RK73HH1J102D	CHIP R 1.0K D 1/16W	
R617			RK73HB1J000J	CHIP R 0.0 J 1/16W	
R621			RK73HB1J103J	CHIP R 10K J 1/16W	
R622			RK73HB1J333J	CHIP R 33K J 1/16W	
R623			RK73HB1J220J	CHIP R 22 J 1/16W	
R627			RK73HB1J103J	CHIP R 10K J 1/16W	
R628,629			R92-5147-05	CHIP R 1.2 D 1/4W	
R630,631			R92-5146-05	CHIP R 1.0 D 1/4W	
R632			RK73HH1J270D	CHIP R 27 D 1/16W	
R633			RK73HB1J472J	CHIP R 4.7K J 1/16W	
R634			RK73HB1J103J	CHIP R 10K J 1/16W	
S1			S68-0911-15	PUSH SWITCH	
S2		✻	S68-0914-05	PUSH SWITCH	
D5,6			015AZ5.1-F(Y)	ZENER DIODE	
D7			1SS402-F	DIODE	
IC1			MN2DS0016AAUB	MOS-IC	
IC5			-	ROM IC	
IC9			-	ROM IC	
IC10			AN41250A-VB	ANALOGUE IC	
IC12			MM1671XNRE	ANALOGUE IC	
IC21			-	MOS-IC	
IC39			NJU7042	ANALOGUE IC	
IC42			TC74VHC273FT	MOS-IC	
IC49			TC7SG04FU-F	MOS-IC	
IC54			IS45S16800TL1	DRAM IC	
IC55			TC7WH32FU-F	MOS-IC	
IC56			HD74LV1GW57AE	MOS-IC	
Q1-4			DTA143XE	DIGITAL TRANSISTOR	
Q10,11			2SC4617	TRANSISTOR	
Q12,13			2SB1709	TRANSISTOR	
Q14,15			2SK3019	FET	
Q20,21			2SK3019	FET	
Q24			SSM3J15FU-F	FET	
Q25			DTA143XE	DIGITAL TRANSISTOR	
Q27			DTA143ZE	DIGITAL TRANSISTOR	
Q28,29			2SA1774	TRANSISTOR	
DVD MECHANISM ASSY (X92-5500-00) (DVS-8000V) (X92-5910-01) (DVS-8521V)					
1	1A	✻	A10-5331-51	CHASSIS	

Ref. No.	Add	New	Parts No.	Description	Destination
2	2B	✻	A10-5332-51	CHASSIS	
3	1A		A10-5333-31	CHASSIS	
4	3A		A10-5334-22	CHASSIS	
7	1B		D10-4918-22	ARM	
8	1B		D10-4919-22	ARM	
9	1B		D10-4920-02	LEVER	
10	1B		D10-4921-02	LEVER	
12	2B		D10-4922-12	SLIDER	
13	2A	✻	D10-4923-22	ARM	
14	2B		D10-4924-13	ARM	
15	2B		D10-4925-12	ARM	
25	2B		D10-4938-04	SLIDER ASSY	
27	2A		D10-4945-04	LEVER	
28	2B		D12-0639-02	CAM	
31	2B		D13-2402-04	GEAR	
32	2B		D13-2403-04	GEAR	
33	2B		D13-2404-04	GEAR	
34	2B		D13-2405-04	GEAR	
35	2B		D13-2406-04	GEAR	
36	2B		D13-2407-04	GEAR	
40	2A		D13-2413-04	GEAR	
41	2A		D13-2415-04	GEAR	
42	2A		D13-2416-04	GEAR	
43	1B		D14-1013-14	ROLLER	
53	1B	✻	D21-2487-24	SHAFT	
54	2A		D39-0269-05	DAMPER	
55	2A		D39-0270-05	DAMPER	
60	3A		F09-2825-23	SHEET	
65	2B		G01-3298-04	EXTENSION SPRING	
66	1B		G01-3299-04	EXTENSION SPRING	
67	2A		G01-3300-14	TORSION COIL SPRING	
68	1B		G01-4601-04	EXTENSION SPRING	
69	1B		G01-4602-04	EXTENSION SPRING	
70	1B		G01-4604-04	TORSION COIL SPRING	
74	2B		G01-4609-14	TORSION COIL SPRING	
75	1B		G02-1550-03	FLAT SPRING	
79	2A		J22-0475-11	MOUNTING HARDWARE	
80	3B	✻	J22-0476-11	MOUNTING HARDWARE	
A	1A		N09-6382-05	MACHINE SCREW (M1.7X2.0)	
B	3B		N09-6408-15	TAPTITE SCREW (PT 1.7X4)	
C	1B		N09-6426-15	MACHINE SCREW (LOAD ARM SCREW	
D	3A		N09-6104-05	MACHINE SCREW (ST 2X10)	
93	2A		T99-0471-05	MAGNET	
96	1B		X94-2080-00	ROLLER ASSY	
98	2A		X94-2060-00	TRAVERSE ASSY (PICKUP,SPINDLE)	
VM1	2A		X94-2070-00	MOTOR ASSY (LOADING)	

E1 : FZDA07EREF2 **E2** : FZDA07ELEF2 (Europe)
M1 : FZDA07MRHF2 (Other Areas)

⚠Indicates safety critical components.

PARTS LIST

CAPACITORS

CC	45	TH	1H	220	J
1	2	3	4	5	6

1 = Type ... ceramic, electrolytic, etc.
2 = Shape ... round, square, etc.
3 = Temp. coefficient
4 = Voltage rating
5 = Value
6 = Tolerance

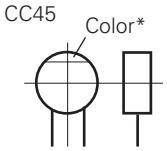

• Capacitor value

010 = 1pF
100 = 10pF
101 = 100pF
102 = 1000pF = 0.001μF
103 = 0.01μF

2 2 0 = 22pF
Multiplier
2nd number
1st number

• Temperature coefficient

1st Word	C	L	P	R	S	T	U
Color*	Black	Red	Orange	Yellow	Green	Blue	Violet
ppm/°C	0	–80	–150	–220	–330	–470	–750

2nd Word	G	H	J	K	L
ppm/°C	±30	±60	±120	±250	±500

Example : CC45TH = –470±60ppm/°C

• Tolerance (More than 10pF)

Code	C	D	G	J	K	M	X	Z	P	No code
(%)	±0.25	±0.5	±2	±5	±10	±20	+40 –20	+80 –20	+100 –0	More than 10μF : –10~+50 Less than 4.7μF : –10~+75

(Less than 10pF)

Code	B	C	D	F	G
(pF)	±0.1	±0.25	±0.5	±1	±2

• Voltage rating

2nd word / 1st word	A	B	C	D	E	F	G	H	J	K	V
0	1.0	1.25	1.6	2.0	2.5	3.15	4.0	5.0	6.3	8.0	–
1	10	12.5	16	20	25	31.5	40	50	63	80	35
2	100	125	160	200	250	315	400	500	630	800	–
3	1000	1250	1600	2000	2500	2150	4000	5000	6300	8000	–

• Chip capacitors

(EX) CC 73 F SL 1H 000 J
1 2 3 4 5 6 7
(Chip) (CH, RH, UJ, SL)

(EX) CK 73 F F 1H 000 Z
1 2 3 4 5 6 7
(Chip) (B, F)

Refer to the table above.
1 = Type
2 = Shape
3 = Dimension
4 = Temp. coefficient
5 = Voltage rating
6 = Value
7 = Tolerance

• Dimension

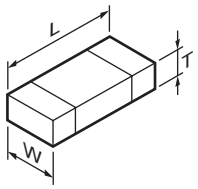

Chip capacitor

Code	L	W	T
Empty	5.6±0.5	5.0±0.5	Less than 2.0
A	4.5±0.5	3.2±0.4	Less than 2.0
B	4.5±0.5	2.0±0.3	Less than 2.0
C	4.5±0.5	1.25±0.2	Less than 1.25
D	3.2±0.4	2.5±0.3	Less than 1.5
E	3.2±0.2	1.6±0.2	Less than 1.25
F	2.0±0.3	1.25±0.2	Less than 1.25
G	1.6±0.2	0.8±0.2	Less than 1.0
H	1.0±0.05	0.5±0.05	0.5±0.05

Chip resistor

Code	L	W	T
E	3.2±0.2	1.6±0.2	1.0
F	2.0±0.3	1.25±0.2	1.0
G	1.6±0.2	0.8±0.2	0.5±0.1
H	1.0±0.05	0.5±0.05	0.35±0.05

RESISTORS

• Chip resistor (Carbon)

(EX) RD 73 E B 2B 000 J
1 2 3 4 5 6 7
(Chip) (B, F)

• Carbon resistor (Normal type)

(EX) RD 14 B B 2C 000 J
1 2 3 4 5 6 7

1 = Type
2 = Shape
3 = Dimension
4 = Temp. coefficient
5 = Rating wattage
6 = Value
7 = Tolerance

• Rating wattage

Code	Wattage	Code	Wattage	Code	Wattage
1J	1/16W	2C	1/6W	3A	1W
2A	1/10W	2E	1/4W	3D	2W
2B	1/8W	2H	1/2W		

DANGER:
Please do not look at the laser beam directly during repair or operation check.